Fort Campbell Water and Wastewater Design Guide and Construction Standards

U.S. Army DOC
Fort Campbell

Version No. 3

February 2007

CH2MHILL

Building 1746
1st Street and Kentucky Avenue
Fort Campbell, KY 42223

Pages

TABLE OF CONTENTS

PART 00

General Requirements for Water and Wastewater Connections..... 1- 8
Application for Water/Wastewater Utilities Service 1- 3
Fixture Count Worksheet..... 1- 1

PART A

Water Distribution System Design Guide 1- 6

PART B

Wastewater System Design Guide..... 1- 10
Grease Interceptor Sizing Worksheet 1- 1

PART C – STANDARD SPECIFICATIONS FOR WATER AND WASTEWATER CONSTRUCTION

DIVISION 2—SITE CONSTRUCTION

02080 Fire Hydrants 1- 3
02320 Trench Backfill 1- 7
02500 Conveyance Piping - General 1- 7
02502 Ductile Iron Pipe and Fittings..... 1- 8
02509 Polyvinyl Chloride (PVC) Pressure Pipe and Fittings..... 1- 3
02512 Gravity Sewer Pipe and Fittings 1- 15
02518 Water Service Connections..... 1- 7
02519 Disinfection of Water Systems 1- 3
02533 Manholes..... 1- 12

DIVISION 3—CONCRETE

03300 Cast-In-Place Concrete 1- 20
03600 Grout 1- 4

DIVISION 4—MASONRY (NOT USED)

DIVISION 5—METALS (NOT USED)

DIVISION 6—WOOD AND PLASTICS (NOT USED)

DIVISION 7—THERMAL AND MOISTURE PROTECTION (NOT USED)

DIVISION 8—DOORS AND WINDOWS (NOT USED)

DIVISION 9—FINISHES (NOT USED)

DIVISION 10—SPECIALTIES (NOT USED)

DIVISION 11—EQUIPMENT

11306 Duplex Submersible Grinder Pump Station..... 1- 9

DIVISION 12—FURNISHINGS (NOT USED)

DIVISION 13—SPECIAL CONSTRUCTION (NOT USED)

DIVISION 14—CONVEYING SYSTEMS (NOT USED)

DIVISION 15—MECHANICAL

15202 Valves and Operators..... 1- 12
15205 Piping Specialties..... 1- 8

DIVISION 16—ELECTRICAL (NOT USED)

PART D—STANDARD DRAWINGS INDEX

DETAIL #	DESCRIPTION
2005	Concrete Thrust Blocks (Sheets 1 and 2)
2010	Tapping Tee
2011	¾-, 1-, 1 ½-, and 2-inch Water Service Connection
2012	Curb Stop
2013	Reduced Pressure Backflow Preventor
2014	3”, 6”, and 8” Meter Box
2015	Water Main Relocation/Water Service Conflicts
2020	Cleanout Frame and Cover
2021	2-Way Cleanout Frame and Cover
2022	Temporary Test Riser at Cleanout
2025	Standard Manhole Frame and Cover
2030	Manhole Frame and Cover Setting with Grade Extension
2031	Manhole Chimney Seal
2035	Manhole Top Section
2040	Manhole Base Section
2045	Manhole Base Section (with Pipe Drop Less Than 2’-0”)
2046	Standard Connection of Force Main to Manhole
2050	Pipe Connections to Existing Manholes
2051	Existing Manhole Tie-in Replacement
2052	Joint for Dissimilar Gravity Sewer Pipe

DETAIL #	DESCRIPTION
2060	Manhole Base Section (with Drop Assembly for >2'-0" Drop)
2061	Manhole Base Section with Continuous Flow
2062	Abandoning Manholes and Sewers
2063	Brick Manhole Rehabilitation
2070	Concrete Protection
2071	Concrete Cap
2074	Check Dam for Gravity Sewer
2075	Trench Cutoff
2076	Concrete Anchors for Sewers on Steep Grades
2080	Guard Post
2081	Sanitary Sewer Service Connection
2082	Alternate Sanitary Sewer Service Connection
2090	Air Vacuum Release Valve/Manhole Assembly
2095	Blowoff Assembly/Manhole
2100	Vent
2105	Break-Away Coupling
2115	Valve Box/Operator Stem
2125	Cased Pavement/Levee Crossing
2130	Cased Railroad Crossing
2135	Cased Pipe Section
2140	Concrete Support for Crossing Existing Utilities
2150	Typical Trench
2160	Surface Restoration-Non Paved Areas
2175	Fire Hydrant
2180	Buried Gate Valve
2181	Post Indicator Valve
2182	Typical Valve and Box Setting with By-Pass
2311	Pressure Reducing Valve
2330	Automatic Air Release Assembly For Water Line Service
2331	Double Detector Check Valve and Vault
2480	Stem Guide Installation
2740	Rock Check Dam
2800	Grinder Pump Station
2805	Pump Station Apron Slab
2810	Pump Station Fencing

END OF SECTION

Part 00
General Requirements

U.S. Army DOC
Fort Campbell

Version No. 3

Additional Parts Include:

Part B: *Wastewater System Design Guide*

Part C: *Standard Specifications For Water and Wastewater Construction*

Part D: *Standard Drawings For Water and Wastewater Construction*

February 2007

CH2MHILL

Building 1746

1st Street and Kentucky Avenue

Fort Campbell, KY 42223

PART 00
GENERAL REQUIREMENTS FOR WATER AND WASTEWATER CONNECTIONS AT FORT CAMPBELL, KENTUCKY

PART 1 INTRODUCTION

1.1 PURPOSE AND APPLICATION

1. These requirements apply to all users of the water and sewer utility systems at Fort Campbell, Kentucky, including but not limited to the U.S. Army, AAFES, NAF activities, private contractors, and any and all tenants of the Post.

2. Effective August 31, 2003, CH2M HILL is the privatized owner and operator of the water and sewer systems at Fort Campbell, up to and including a point of demarcation not closer than 5 feet from the exterior of each facility on Post. Typical demarcations will include a shutoff valve, water meter, or backflow preventor on the water line, or a cleanout on the sewer line. Existing and new exterior oil-water separators and grease traps are included in CH2M HILL's systems.

3. It is Fort Campbell and CH2M HILL policy that connecting facilities to the water and wastewater utilities must be performed safely and in compliance with all applicable regulations and standards. As such, no water or wastewater connections may be made without prior coordination and approval by CH2M HILL.

4. Designs and construction shall be in accordance with the latest version of the *Fort Campbell Water and Wastewater Design Guide and Construction Standards*, available from CH2M HILL. Water and wastewater utility designs shall be reviewed and approved by CH2M HILL before construction can begin. The customer shall coordinate construction activities with CH2M HILL for inspection. CH2M HILL will make final water connections and initiate utility service, but in no case shall water service be turned on until construction has been inspected and approved and as-built record drawings received.

5. The specifications and drawings included in this document establish the performance, quality requirements, location, and general arrangement of materials and equipment, and establish the minimum standards for quality of workmanship and appearance for any project involving the construction of water or sewer infrastructure at Fort Campbell. All construction of water or sewer infrastructure shall follow the standards specified in this document.

6. Items not covered in these specifications shall reference "Fort Campbell, Kentucky, Technical Design Guide, US Army Corps of Engineers, Louisville District, September 2004."

7. Official copies of "Fort Campbell Water and Wastewater Design Guide and Construction Standards" Version No. 3 can be obtained from:

   Chris Semler
   P.O. Box 595
   Fort Campbell, KY 42223
   (931) 980-7223

1.02 DEFINITIONS

A. Developer – The individual, Partnership, Joint Venture, corporation, government agency or other legal entity responsible for the construction and funding of a project. (e.g., Army DPW, Army Corps, Ft. Campbell Family Housing etc.).

B. Owner – CH2M HILL owns, operates, and maintains the infrastructure through calendar year 2050. As such, CH2M HILL has the authority to establish standards, review and approved designs, evaluate and approve substitutions, perform periodic and final inspections, issue Stop Work Orders if unpermitted work is being constructed or permitted projects are not being constructed as approved. CH2M HILL owns and maintains the database of the water and sewer system and will provide information and data to the Engineer for their use during design. CH2M HILL will incorporate record drawings into the database on a periodic basis.

C. Engineer - A Professional Engineer licensed by the State where the project is located. Responsible for the design of the improvements to meet State and CH2M HILL standards. Submits sealed drawings for review and approval. May represent developer during construction to respond to construction issues and quantities in the field. Upon completion, certifies that the work was completed as designed.

D. Contractor – The individual, Partnership, Joint Venture, corporation or other legal entity who performs the construction work under the terms of the contract documents.

E. Project- Any facility or group of facilities, new or renovated, requiring new, relocated, or otherwise changed water and/or wastewater infrastructure.

F. Infrastructure- Water or wastewater utilities including water and sewer mains, service lines, laterals, manholes, valves, etc. to make utility system functional.

G. Directorate of Public Works (DPW) – Fort Campbell Public Works entity responsible for roadways and other infrastructure.

H. Customer – The developer, engineer, or contractor who completes the application for water and/or sewer service.

1.05 PERMITTING

A. CH2M HILL will obtain, arrange and secure any required water or sewer permits from the State(s) or other cognizant authority, using drawings sealed by the Engineer.

1.06 CONSTRUCTION LAYOUT

A. The Developer shall provide all surveying, construction layout, line and grade measurement necessary to install the work in accordance with the accepted Plans and Specifications.

B. Fort Campbell has the following control point network and datum requirements for every project.

1. New control monuments shall be established on site and tied to Tennessee State Plane Coordinate System NAD 83.

2. The survey control points are GPS Class I and Class II Horizontal with additional elevation coming from an off-post USGS Class I bench mark to establish Second Order Class II vertical on all survey control points.

3. Hardcopy books of existing points (including sketches) are maintained at both Fort Campbell (POC Scott Slade (270) 798-9724) and the Louisville District (DPW Chris Heintz (502) 315-6408).

C. Developer shall be responsible for identifying and protecting any utilities before starting construction.

D. Local permits shall include demolition, digging, excavation, compaction, electrical, fuel tank installation, and environmental. Several of the specific permit forms that apply are located within sections this document along with information identifying appropriate installation drop-off locations and points of contact.

1.07 DELIVERABLES

A. Hard-copy Drawings

1. Final construction contract drawings and as-built drawings shall be digital and placed on 22" x 34" plastic film (Mylar) sheets. A graphic scale shall be shown on each sheet of the drawings.

2. Original seal signed and date affixed on each sheet.

3. Drawings must include location map.
   a. Cover sheet must include official project name and title block.
   b. Sewer plan and profile for all.
   c. Water plan and profile for utility crossing.
   d. Plans must show all existing and proposed underground and overhead utilities.

4. Drawings submitted for review shall be reproduced on 8 ½” x 11” or 11” x 17” paper using a laser printer.

B. Digital Drawings

1. CADD Drawings containing Geographic data (Site Plan, Survey and Mapping Plan, Storm Sewer Plan, Electrical Utilities Plan…) will use the Tennessee (TN) State Plane Coordinate System. The Datum used will be the North American Datum of 1983 (NAD83). The mapping units will be US feet. Vertical upland topographic surveys will use North American Vertical Datum (NAVD) 1988.

2. Digital geographic data will have accuracy within two feet.

3. Digital geographic data will be 99% free of topological errors including, but not limited to: the absence of dangling nodes, undershoots, overshoots, and snapped nodes for line segments (road centerlines, edge-of-curb, elevation contours…); the existence of features that have area square footage (building footprints, parking lots, sidewalks…) will have polygon representations in the CADD drawings.

4. All CADD drawings shall be done on Bentley Systems, Inc. MicroStation Version 8.1 or a compatible approved by CH2M HILL.

1.08 CONSERVATION STANDARDS

A. Fort Campbell has adopted conservation standards for utilities on the Post. The standards dictate the use of low flow plumbing fixtures. The CH2M HILL design standards reflect the use of the low flow fixtures in new facilities to be connected to the system.

1.09 WATER METERS/BACKFLOW PREVENTORS/LINE TAPS

A. CH2M HILL requires water meters on individual facilities.

B. CH2M HILL requires the customer installation of a backflow preventor on each water service line to each facility per Army and/or state regulations, and requires access for regular inspection. The new backflow preventor must be installed and tested by a licensed interior plumber, and must be inspected and accepted by CH2M HILL.

C. CH2M HILL will make all taps to the existing water and inspect sewer lines, for service to new facilities.

D. CH2M HILL requires a double detector check valves and vaults on all fire protection lines.

PART 2 CONSTRUCTION AND COMPLETION

2.01 CONSTRUCTION COMPLETION

A. At the completion of construction, as-built drawings must be provided to CH2M HILL along with a completed Form 1354. Final payment to the contractor shall be withheld by the Army until such drawings are provided.

2.02 RECORD DRAWINGS

A. The CONTRACTOR will prepare a set of Record Drawings for the Project which will include the changes made in materials, equipment, locations, and dimensions of the Work. The CONTRACTOR shall maintain a set of Record Drawings onsite and shall update the Drawings on a weekly basis. Upon completion of the Contractor's Work, the record drawings shall be delivered within 10 days of Final Completion to CH2M HILL's Designated Representative.

B. The CONTRACTOR will perform a physical Field Survey following construction documenting the location and elevation of the improvements associated with this project.

1. Surveys shall be completed with a Total Station Surveying Instrument, or CH2M HILL-approved equal.

2. Surveys shall be completed in the Tennessee (TN) State Plane Coordinate System. The horizontal Datum used shall be the North American Datum of 1983 (NAD83). The mapping units shall be US feet. Vertical upland topographic surveys shall use North American Vertical Datum (NAVD) 1988.

3. All Surveys must include and reference an established surveying benchmark or monument on the Fort Campbell Post, which must be aligned with USGS Datum. All elevations shall be repeatable and accurate to the nearest hundredth of a foot (0.01 feet +/-). All coordinates shall be repeatable and accurate to the nearest 3 inches (0.25 feet +/-).

4. All survey information and CADD drawings shall be submitted in a format that is compatible with Bentley Systems, Inc. Microstation Version 8.1, or a compatible CH2M HILL-approved format.

5. Features to be surveyed include:
   a. Manholes, new or adjusted
      1) Top of Casting - vertical
      2) Center of lid – horizontal
      3) Pipe invert for each pipe entering or exiting the manhole
   b. Cleanouts
      1) Top, Center of Lid
   c. Water Valves
      1) Top, center of valve box lid
   d. Water Hydrants
      1) Top, center of Northernmost bonnet bolt (NOT the operating nut)
   e. Post Indicating Valves
      1) Directly adjacent to the Valve at ground level
   f. Meter Box
      1) Top, center of lid
   g. External Backflow-Prevention Devices
      1) 4 corners of the concrete slab

C. The CONTRACTOR shall furnish three hard copies and one electronic version of a complete instruction manual for installation, operation, maintenance, and lubrication requirements for each component of mechanical and electrical equipment or system provided. All equipment manufacturers and/or suppliers shall be made aware of these requirements and all associated costs shall be included in the costs for furnishing the equipment or system. Each instruction manual furnished shall be fixed in a 3-ring binder which is clearly labeled to designate the system or equipment for which it is intended with reference to the building and equipment number, and the specification section where the item is specified.

D. SAMPLES AND TEST SPECIMENS

1. Where required in the specifications, test specimens or samples of materials, appurtenances, and fittings to be used or offered for use in connection with the Work shall be submitted to the CH2M HILL representation at the Contractor's expense, with information as to their

sources, with all cartage charges prepaid, and in such quantities and sizes as may be required for proper examination and tests to establish the quality or equality thereof, as applicable.

2. All samples and test specimens shall be submitted in ample time to enable the CH2M HILL to make any tests or examinations necessary, without delay to the Work. The Contractor will be held responsible for any loss of time due to his neglect or failure to deliver the required samples to the CH2M HILL, as specified.

3. Samples also shall be taken during the course of the Work, as required by the Contractor.

4. All soil proctors, backfill compaction densities, concrete strength, asphalt placement and other tests required by the Specifications to be performed by an independent laboratory shall be made at the sole expense of the Contractor. Test reports shall be submitted directly by the independent laboratory to the CH2M HILL in ample time to make any reviews necessary without delay to the work.

5. Material used in the Work shall conform with the submitted samples and test certificates as approved by the CH2M HILL.

2.03 CERTIFICATES OF COMPLIANCE WITH SPECIFIED STANDARDS AND CODES

A. A Certificate of Compliance shall be furnished for materials specified to a recognized standard or code prior to the use of any such materials in the Work. The Owner may permit the use of certain materials or assemblies prior to sampling and testing if accompanied by a Certificate of Compliance. The certificate shall be signed by the manufacturer of the material or the manufacturer of assembled materials and shall state that the materials involved comply in all respects with the requirements of the Specifications. A Certificate of Compliance shall be furnished with each lot of material delivered to the Work and the lot so certified shall be clearly identified in the certificate.

B. All materials used on the basis of a Certificate of Compliance may be sampled and tested at any time. The fact that material is used on the basis of a Certificate of Compliance shall not relieve the Contractor of responsibility for incorporating material in the Work which conforms to the Specifications and any such material not conforming to such Specifications will be subject to rejection whether in place or not. Cost to remove or replace shall be the responsibility of the Contractor.

C. CH2M HILL reserves the right to refuse permission for use of material on the basis of a Certificate of Compliance.

D. The form of the Certificate of Compliance and its disposition shall be as directed by the CH2M HILL.

E. Contractor shall warrant to CH2M HILL that all goods or equipment which Subcontractor is required to purchase under the Contract and which contain embedded codes, chips, microprocessors, microcontrollers, clock circuits (including integrated circuits), computer operating systems, computer software, custom application programming, or other similar systems/technologies that calculate date or timed data shall be Year 2000 Compliant in that they shall correctly and without failure, malfunction, or need for operator intervention, display, calculate, compute, and process date or time data before, during, and beyond December 31, 1999, including leap years.

END OF SECTION

FORT CAMPBELL ARMY POST

Application for Water and Wastewater Connection

To be completed by CH2M HILL

Application date: _____

Application number: _____

Requestor

Firm Name_____

Technical Representative _____

Address_____

Phone No._____

Representative to Sign Agreement_____

Address_____

Phone No._____

Federal Contract Information

Contract Number_____

Contract Date_____

Project Title_____

Government Project Number_____

Contracting Agency_____

Contract Officer _____

Address_____

Phone Number_____

Service Requested

☐ Water ☐ Wastewater

Date final service is required _____

Will construction be phased? YES NO (circle one)

If phased, provide dates:

_____

_____

Structure Description

Name of structure or complex _____

Single structure or multiple structures _____

Describe function of structure(s) _____

Permanent or Temporary_____

Location (Street Address) _____

Site Plan – Provide site plan with streets and layout of structures (attach drawing)

Capacity Requirements

Anticipated water demand per structure (attach worksheet) _____

Anticipated irrigation demand (attach worksheet) _____

Anticipated fire demand (attach worksheet) _____

Anticipated sewer demand (attach worksheet) _____

Will a lift station be required? If so, what is the anticipated capacity of the lift station?
_____

Will the existing water and wastewater systems support this required demand? Yes or No (circle one)

Wastewater Characteristics

Is the wastewater discharged to the sewer likely to have characteristics that would differ from that of normal domestic wastewater (this includes structures that contain food preparation facilities larger than single family kitchens) or exceed any of the limits in the Fort Campbell Sewer Use Policy?

YES NO (circle one)

If the answer to the above question is yes, fill in supplemental data form to indicate the nature of the facility for the purpose of determining potential wastewater service requirements.

Application Fee (Design Review and Inspection)

An Application Fee is due and payable with this application. The fee is calculated by adding the estimated _____ lineal feet of water line to the estimated _____ lineal feet of sewer line and applying the following table:

- 0 – 1000 feet, $1700
- 1001 – 2000 feet, $2,300
- 2001 – 5000 feet, $5,000
- Greater than 5000 feet, $11,000

Additionally, special fees may be imposed for design reviews of large lift stations, storage tanks, or any other structure that is determined to be out of the ordinary and will be calculated separately with payment due before approval to construct is granted.

The fee for this project is: $_____. Additional fees will/will not (circle one) be required.

Impact Fee

An Impact Fee may be due and payable for any infrastructure required outside the footprint of this project but required to support this project, whether the infrastructure exists or is to be constructed, and may be imposed against the project or the Customer to recover the cost of said infrastructure. Such fees will be calculated apart from any other fees discussed in this document Impact fees will be calculated based on the portion of available capacity (existing or to be constructed) required to support the project.

The impact fee for this project is: $_____.

Disputes

In the event of any dispute, question, or disagreement arising from or relating to this process and/or the Fort Campbell Water and Wastewater Design and Construction Standards, the parties hereto shall use their best efforts to settle the dispute, question, or disagreement. To this effect, they shall consult and negotiate with each other in good faith and, recognizing their mutual interests, attempt to reach a resolution satisfactory to both parties. If they do not reach such resolution within a period of 60 days after a party has notified the other of the dispute, then the parties shall submit the dispute to a mutually acceptable neutral third party before resorting to arbitration. If the parties do not reach resolution of the dispute within 60 days after submitting the dispute to a neutral third party, either party may, upon written notice to the other party, submit the dispute to binding arbitration in accordance with rules comparable to the Construction Industry Arbitration Rules of the American Arbitration Association then in effect. The location of any mediation or arbitration shall be the location of the Project, or as otherwise mutually agreed between the parties. The prevailing party in any dispute arising out of or relating to this Agreement or its breach that is resolved by arbitration or other litigation shall be entitled to recover from the other party reasonable attorney's fees, costs and expenses incurred by the prevailing party in connection with such arbitration or litigation.

I hereby acknowledge receipt and acceptance of this application for further review and processing.

CH2M HILL CONSTRUCTORS, INC.

Sign Name:

Print Name:

_____

Print Title:

_____

I hereby certify that the information contained herein is accurate and complete to the best of my ability.

CUSTOMER/REQUESTOR

Sign Name:

Print Name:

_____

Print Title:

_____

Ft Campbell Water Customer Data Sheet

Application No.: _____

Application Date: _____

Name of Structure						Project No.:
Contact/Firm/Phone No.						
Location (Street Address):						
Process Water - Max GPM						Special Water Uses - Max GPM
Fixtures	AWWA Fixture Value 35 PSI		Number of Fixtures		AWWA Total	
Whirlpool	8	X				
Bathtub	8	X				
Bedpan Washers	10	X				
Dental Unit	1	X				
Dental Lavatory	2	X				
Drinking Fountain Cooler	1	X				
Public	2	X				
Lavatory Public	0.5	X				
Private	2	X				
Laundry Tray Public	3	X				
Private	7	X				
Shower Head	2.5	X				
Urinal Pedestal Flush Valve	15	X				
Wall Flush Valve	12	X				
Sink (each set of faucets)	2	X				
Water Closet Flush Valve	15	X				
Tank Type	3	X				
Dishwasher 1/2" Connection	5	X				
3/4" Connection	10	X				
Washer 1/2" Connection	5	X				
3/4" Connection	12	X				
1" Connection	25	X				
Hose Connection (wash down) 1/2"	6	X				
3/4"	10	X				
Hose (50ft. Wash down) 1/2"	6	X				
5/8"	9	X				
3/4"	12	X				
Combined Fixture Total						
Booster Pumps with direct Suction taken from meter? ___Yes ___ No		If yes provide pump characteristic curve(s), design flow, operation sequence and information on any water flow that will bypass booster pump.				
DO NOT WRITE IN SPACE BELOW-FOR OFFICE USE ONLY						

AWWA STANDARDS		Process Water	Special Water Use		
Fixture Value Total	Max GPM (from chart)	Max GPM	Max GPM	Max GPM Total	Meter Size Required
Additional Comments				Project #	
				Service Request #	
				Block Map Page #	

Part A
Water Distribution System Design Guide

U.S. Army DOC
Fort Campbell

Version No. 3

Additional Parts Include:

Part B: *Wastewater System Design Guide*

Part C: *Standard Specifications For Water and Wastewater Construction*

Part D: *Standard Drawings For Water and Wastewater Construction*

February 2007

CH2MHILL

Building 1746
1st Street and Kentucky Avenue
Fort Campbell, KY 42223

Part A
WATER DISTRIBUTION SYSTEM DESIGN GUIDE

PART 1 GENERAL

1.01 GENERAL

A. Water distribution systems shall be designed by the Engineer following these design guidelines. The design standards presented here have been adapted from the 10-States Design Standards, Recommended Standards for Water Works (Health Education Services 2003), and the Fort Campbell, Kentucky, Technical Design Guide (US Army Corps of Engineers, Louisville District, 2003). It is the responsibility of the Engineer to ensure that the technical contents of this document are incorporated into design documents prior to submission for review.

B. Engineer shall NOT contact Kentucky or Tennessee Regulators.

PART 2 SYSTEM DESIGN

2.01 PRESSURE

A. The system shall be designed to maintain a minimum pressure of 20 psi at ground level at all points in the distribution system under all conditions of flow. The normal working pressure in the distribution system should be approximately 60 to 80 psi and not less than 35 psi.

2.02 DIAMETER

A. The minimum size of water main which provides for fire protection and serving fire hydrants shall be 8 inches in diameter. Larger size mains will be required if necessary to allow the withdrawal of the required fire flow while maintaining the minimum residual pressure specified above.

B. The minimum size of water main in the distribution system where fire protection is not to be provided shall be a minimum of 6 inches in diameter.

2.03 FIRE PROTECTION

A. When fire protection is to be provided, system design should be such that fire flows and facilities are in accordance with the appropriate, relevant requirements of the NFPA.

B. Fire hydrant lines shall be a minimum 6 inches in diameter and a maximum of 300 feet long.

C. Water mains serving more than one hydrant shall be a minimum of 8 inches in diameter.

D. CH2M HILL, upon request, will conduct hydrant tests. CH2M HILL is required to provide 20 psi at 500 gpm for design. Hydrants serving airfield areas must provide 20psi at 1,000 gpm for design. Should additional pressure be required, a booster pump station will be needed within the customer's facility.

E. Dedicated fire protection service lines for sprinkler systems shall be separate from the water service line for the structure and shall be equipped with a double check detector valve backflow preventor.

2.04 DEAD ENDS

A. Dead end mains are not allowed. The distribution piping must be looped or part of a grid.

2.05 MATERIALS

A. Materials. Materials specifications are in Part C, "Standard Specifications for Water and Wastewater Construction," Sections 02500 (Conveyance Piping-General), 02502 (Ductile Iron Pipe and Fittings), and 02509 (Polyvinyl Chloride (PVC) Pressure Pipe and Fittings, and 02518 (Water Service Connections).

2.06 CAPACITY

A. For on-Post residential structures, the required daily flow shall be 150 gallons/capita/day. For non-residential persons (e.g. daily workers) the required daily flow shall be 50 gallons/capita/day.

$$\frac{38.2}{(AverageDailyFlow)^{0.167}}$$

where Average Daily Flow is the total cumulative flow in gallons per day.

B. Facility specific non-residential water use must be added to the residential flow to determine the required daily flow.

C. The velocity in distribution mains shall not exceed10 feet per second. The velocity is determined by dividing the required daily flow by the cross-sectional area of the pipe selected. If the velocity falls below 10 feet per second, the pipe size is acceptable.

2.07 VALVES

A. A sufficient number of valves shall be provided on water mains to minimize inconvenience and sanitary hazards during repairs. Valves shall be the same nominal size as the water main in which they are installed. Valves should be located at not more than 500-foot intervals in commercial districts and at not more than one block or 800-foot intervals in other districts. For transmission mains with no connected customers, the valve spacing should not exceed 1 mile. Valve specifications are in Part C, “Standard Specifications for Water and Wastewater Construction,” Section 15202 (Valves and Operators). A minimum of two valves shall be provided at tees, and a minimum of three valves shall be provided at crosses.

B. All service connections shall have corporation stops, curb stops, angle valves, and meter couplings/yokes sized to match adjacent piping.

C. Post Indicating Valve Locations. Each building with fire protection will require an individual Post Indicating Valve, unless approved otherwise by CH2M HILL Project Manager. The Post Fire Chief shall have final authority on location of all Post Indicating Valves before construction.

2.08 HYDRANTS

A. LOCATION AND SPACING

1. Locate fire hydrants in accordance with MIL HDBK 1008C. Design systems to isolate no more than two fire hydrants out of service at one time.

2. Fire hydrants should be provided at each street intersection and at intermediate points between intersections as recommended by the Post Fire Chief. Generally, fire hydrant spacing ranges from 350 to 500 feet depending on the area being served.

3. Consideration should be given to placing hydrants in locations where traffic disruption is minimized when hoses are lying across the roadway. The Post Fire Chief shall have final authority on number, spacing, and location of all fire hydrants prior to commencing construction.

4. Water mains not designed to carry fire-flows shall not have fire hydrants connected to them. It is recommended that flushing hydrants be provided on these systems. Flushing devices should be sized to provide flows which will give a velocity of at least 2.5 feet per second in the water main being flushed. No flushing device shall be directly connected to any sewer.

5. The hydrant lead shall be a minimum of 6 inches in diameter. Auxiliary valves shall be installed on all hydrant leads.

6. Hydrant Drainage

   a. Hydrant drains should not be plugged. A gravel pocket or dry well shall be provided unless the natural soils will provide adequate drainage.

   b. Hydrant drains shall not be connected to or located within 10 feet of sanitary sewers, storm sewers, or storm drains.

2.09 AIR RELIEF VALVES

A. At high points in water mains where air can accumulate provisions shall be made to remove the air by means of air relief valves. Automatic air relief valves shall not be used in situations where flooding of the manhole or chamber may occur.

1. The open end of an air relief pipe from automatic valves shall be extended to at least 2 feet above grade and provided with a screened, downward-facing elbow.

2. Discharge piping from air relief valves shall not connect directly to any storm drain, storm sewer, or sanitary sewer.

2.10 VALVE, METER AND BLOW-OFF CHAMBERS

A. Wherever possible, chambers, pits or manholes containing valves, blow-offs, meters, or other such appurtenances to a distribution system, shall not be located in areas subject to flooding or in areas of high groundwater. Such chambers or pits should drain to the ground surface, or to absorption pits underground. The chambers, pits and manholes shall not connect directly to any storm drain or sanitary sewer. Blow-offs shall not connect directly to any storm drain or sanitary sewer.

2.11 CROSS-CONNECTIONS

A. There shall be no connection between the distribution system and any pipes, pumps, hydrants, or tanks whereby potable water unsafe water or other contaminating materials may be discharged or drawn into the system.

2.12 WATER SERVICES AND PLUMBING

A. PLUMBING

Water services and plumbing shall conform to relevant local and/or state plumbing codes, or to the applicable National Plumbing Code. Solders and flux containing more than 0.2 percent lead and pipe fittings containing more than 8 percent lead shall not be used. Plumbing specifications are in Part C, “Standard Specifications for Water and Wastewater Construction,” Section 02518 (Water Service Connections).

1. Water service lines shall not conflict with existing utilities. Water service lines shall not be located under buildings, ponds, stormwater basins, or other permanent structures.

B. BACKFLOW PREVENTER

A contractor supplied backflow preventer shall be installed by a certified plumber, according to national plumbing codes, at each service connection to the water main to protect potable water supplies from health hazard contamination by preventing back siphonage and backpressure backflow. Each backflow preventer shall have access for regular inspections, and must be inspected and accepted by CH2M HILL at the time of construction.

C. BOOSTER PUMPS

Individual booster pumps shall not be allowed for any individual residential service from the public water supply mains without prior written approval from CH2M HILL. If additional pressure is required to operate sprinkler systems as provided in Section 2.03 (B), the designer shall notify CH2M HILL in advance.

D. SERVICE METERS

Each service connection shall be individually metered. Meter specifications are in Part C, “Standard Specifications for Water and Wastewater Construction,” Section 02518 (Water Service Connections).

2.13 PROTECTION OF WATER SUPPLIES

A. Water Mains and Sanitary Sewer Mains shall maintain 10 foot horizontal separation at all times. Vertical separation specifications are shown on Detail 2015.

B. Water Mains and Sanitary Sewer Mains shall not be constructed over sink holes or Class V injection wells.

END OF PART

Part B
Wastewater System Design Guide

U.S. Army DOC
Fort Campbell

Version No. 3

Additional Parts Include:

Part A: *Water Distribution System Design Guide*

Part C: *Standard Specifications For Water and Wastewater Construction*

Part D: *Standard Drawings For Water and Wastewater Construction*

October 2006

CH2MHILL

Building 1746

1st Street and Kentucky Avenue

Fort Campbell, KY 42223

PART B
WASTEWATER SYSTEM DESIGN GUIDE

PART 1 GENERAL

1.01 GENERAL

A. Wastewater system improvements shall be designed by the Engineer following these design guidelines. CH2M HILL will approve plans for new systems, extensions to new areas, or replacement sanitary sewers only when designed as a separate sanitary sewer system, in which rainwater from roofs, streets, and other areas, and groundwater from foundation drains are excluded. The design standards presented here have been adapted from the 10-States Standards "Recommended Standards for Wastewater Facilities," 2004.

B. Engineer shall NOT contact Kentucky or Tennessee Regulators.

PART 2 SYSTEM DESIGN

2.01 DESIGN CAPACITY AND DESIGN FLOW

A. Sewer capacities should be designed for the estimated ultimate tributary population, except in considering parts of the systems that can be readily increased in capacity. Similarly, consideration should be given to the maximum anticipated capacity of institutions, industrial parks, etc.

2.02 MINIMUM SIZE

A. No public gravity main line sewer conveying raw wastewater shall be less than 8 inches in diameter. Residential laterals shall not be less than 6 inches in diameter. All other laterals shall not be less than 6 inches in diameter.

B. Residential Duplex buildings may combine two laterals to one, and temporary buildings may combine two laterals into one before connecting to the main line. When two laterals are combined, the common lateral shall not be less than 6 inches in diameter. All other structures require an individual lateral, unless approved otherwise by CH2M HILL.

2.03 DEPTH

A. Adequate cover must be provided for frost protection. A minimum of 36-inches of earth will be required to protect the sewer from freezing unless otherwise approved by CH2M HILL. Insulation shall be provided for sewers that cannot be placed at a depth sufficient to prevent freezing.

2.04 BUOYANCY

A. Buoyancy of sewers shall be considered and flotation of the pipe shall be prevented with appropriate construction where high groundwater conditions are anticipated.

2.05 SLOPE

A. Required Minimum Slopes. All sewers shall be designed and constructed to give mean velocities, when flowing full, of not less than 2.0 feet per second, based on Manning's formula using an "n" value of 0.013. The following are the required minimum slopes which should be provided; however, slopes greater than these are desirable. Minimum service lateral slopes shall be ¼ inch per foot as specified in Part C, “Standard Specifications for Water and Wastewater Construction,” Section 02512 (Gravity Sewer Pipe and Fittings).

Nominal Sewer Size	**Minimum Slope in Feet (per 100 feet)**
8 inch	0.40
10 inch	0.28
12 inch	0.22
14 inch	0.17
15 inch	0.15
16 inch	0.14
18 inch	0.12
21 inch	0.10
24 inch	0.08

B. Capacity

1. Contributing population. Domestic wastewater quantities normally are to be computed on a contributing population basis. The population to be used in design depends upon the type of area which the sewer serves. If the area is strictly residential, the design population is based on full occupancy of all housing and quarters served. If the area served is entirely industrial, the design population is the greatest number, employed in the area at any time, even though some of these persons may also be included in the design of sewers in the residential area. For sewers serving both residential and industrial areas, the design population includes residents and nonresidents, but no person should

be counted more than once. For design purposes, one-third of the nonresident population will be added to the resident population.

2. Average daily flow. The average daily flow will be computed by multiplying the resident and nonresident contributing populations by 150 gallons per capita per day plus admissible daily flows from commercial and industrial operations. The average daily flow will be used only for designing sewers to serve the entire installation, or large sections of the installation, and where a major portion of the wastewater is generated by residents over a 24-hour period.

3. Average hourly flowrate. When designing sewers to serve small areas of the installation where several buildings or a group of buildings are under construction, and where the majority of wastewater is generated by nonresidents or other short term occupants, the average hourly flowrate will be used. The average hourly flowrate will be computed based on the actual period of waste generation. For example, 1,000 nonresidents at 50 gallons per capita per day would generate 50,000 gallons in 8 hours for an average hourly flowrate of 6,250 gph (150,000 gpd). Note that the average daily flow would still be 50,000 gpd, or 50,000 gallons in 24-hours, but the sewer must be designed hydraulically to carry the 50,000 gallons in 8 hours, not 24 hours.

4. Infiltration. Extraneous flows from ground water infiltration will enter the sewer system and is to be accounted for by adding 500 gpd/per inch per mile of pipe, to the peak rate of flow. For any existing pipe network, add 1,000 gpd/per inch mile of pipe.

5. Gravity sewer design. Generally, it is not desirable to design sewers for full flow, even at peak rates. Maximum depth of flow over full depth of pipe valves are given in the table below:

Sewer Diameter (in)	Depth of flow / Full Depth
6	60%
8	60%
10	60%
12	60%
15	65%
18	65%
21	70%
24	70%
27	70%

The following formula, charts, procedures, and criteria will be used for design.

6. The Manning formula will be used for design of gravity flow sewers as follows:

$$V = \frac{1.486}{n} R^{2/3} S^{1/2}$$

Where:

V = velocity in fps
n = coefficient of pipe roughness
R = hydraulic radius in feet, and
S = slope of energy grade line in feet per foot

7. The roughness coefficient (n) for use in the manning formula will be 0.013 for pipe sizes 12 inches and larger, and 0.014 for pipe sizes 10 inches and smaller.

8. Velocity. Sewers will be designed to provide a minimum velocity of 2.0 fps at the average daily flow, or average hourly flowrate, and a minimum velocity of 2.5 to 3.5 fps at the peak diurnal flowrate. Maximum velocity is set at 10.0 fps.

9. Slope. Assuming uniform flow, the value S in the Manning formula is equivalent to the sewer invert slope. Pipe slopes must be sufficient to provide the required minimum velocities and depths of cover on the pipe.

10. Minimum Flow Depths. Slopes less than those recommended for the 2.0 feet per second velocity, when flowing full, shall not be permitted.

11. Slope between Manholes. Sewers shall be laid with uniform slope between manholes.

12. High Velocity Protection. Where velocities greater than 15 feet per second are attained, special provision shall be made to protect against displacement by erosion and impact.

13 Steep Slope Protection. Sewers on 20 percent slopes or greater shall be anchored securely with concrete, or equal, anchors spaced as follows:
   a. Not over 36 feet, center-to-center, on grades 20 percent and up to 35 percent;

b. Not over 24 feet, center-to-center, on grades 35 percent and up to 50 percent; and
c. Not over 16 feet, center-to-center, on grades 50 percent and over.

2.06 ALIGNMENT

A. In general, sewers 24 inches or less shall be laid with straight alignment between manholes. Straight alignment shall be checked by either using a laser beam or lamping.

2.07 CHANGES IN PIPE SIZE

A. When a smaller sewer joins a large one at a manhole, the invert of the larger sewer should be lowered sufficiently to maintain the same energy gradient. An approximate method for securing these results is to place the 0.8 depth point of both sewers at the same elevation.

2.08 MATERIALS AND INSTALLATION

A. Materials and Installation specifications are in Part C, “Standard Specifications for Water and Wastewater Construction:”

1. Section 02315 (Excavation)
2. Section 02320 (Trench Backfill)
3. Section 02500 (Conveyance Piping-General)
4. Section 02502 (Ductile Iron Pipe And Fittings)
5. Section 02509 (Polyvinyl Chloride (PVC) Pressure Pipe And Fittings)
6. Section 02512 (Gravity Sewer Pipe and Fittings)

B. PVC Pipe shall be used for all sewer mains and lateral connections, less than 15 feet deep.

C. Ductile Iron Pipe shall be used for all sewer mains and lateral connections deeper than 15 feet.

2.09 ALTERNATE MATERIALS

A. Materials not specified above may be approved by CH2M HILL on a case-by-case basis. These materials include, but are not limited to, reinforced concrete pipe, clay pipe and HDPE pipe.

2.10 MANHOLES

A. LOCATION

Manholes shall be installed: at the end of each line; at all changes in grade, size, or alignment; at all intersections; and at distances not greater than 400 feet for sewers 15 inches or less, and 500 feet for sewers 18 inches and larger. Cleanouts may be used only for special conditions and shall not be substituted for manholes nor installed at the end of laterals greater than 150 feet in length.

B. DROP TYPE

A drop pipe shall be provided for a sewer entering a manhole at an elevation of 24 inches or more above the manhole invert.

C. MATERIALS AND INSTALLATIONS

Materials and installations specifications are in Part C, “Standard Specifications for Water and Wastewater Construction,” Section 02533 (Manholes). Installation details for manholes are in Part D.

2.11 GREASE TRAPS/INTERCEPTORS

A. The Fort Campbell Environmental Division states that The Clean Water Act and the NPDES Permit require that certain contaminants be removed from wastewater before it is discharged to the wastewater collection system. Under this pretreatment requirement, wastewater contaminated with grease or oils must be treated to remove the grease or oil before the water can be discharged to the wastewater collection system.

B. LOCATION

1. In new construction or renovation, grease traps shall be located outside the building.
2. Grease traps shall be located to ensure ease of accessibility for cleaning and servicing.
3. Grease traps shall be accessible by pump truck under all weather conditions. This may include a gravel access roadway.

C. CLEANING AND SERVICING

Grease traps shall be cleaned quarterly as a minimum requirement. Certain grease traps may require more frequent cleaning if they are undersized to prevent contaminants from entering the wastewater collection system. Grease traps shall be cleaned using a vacuum truck. After grease traps are pumped

and cleaned, they shall be recharged with water to allow the grease trap to operate properly after cleaning.

D. SIZING

1. The Uniform Plumbing Code shall be used for sizing grease traps at Fort Campbell. This formula, shown below, takes the number of meals of a restaurant per peak hour and multiplies it by waste flow rate, retention time, and storage factor to get the size requirement. This formula includes a safety factor. The customer is required to provide the seating capacity in order to calculate the number of meals per peak hour. This information should be readily available in order to determine grease trap/interceptor size. This process is clarified on the Uniform Plumbing Code's *Grease Interceptor Sizing Worksheet*, which is attached immediately following Part B.

a. Uniform Plumbing Code Formula

$$\frac{\#\ of\ \ meals}{peak\ \ hour}\ x\ waste\ \ flow\ rate\ x\ retention\ time\ x\ storage\ \ factor\ =\ size\ requirement$$

b. Number of meals served at peak operating hour (Seating Capacity) x Peak Factor
   1) Where Peak Factor for Fast Food Restaurant is 1.33
   2) And, Peak Factor for all other food service types is 1.00

c. Waste Flow Rate
   1) With dishwasher: 6-gallon flow
   2) Without dishwasher: 5-gallon flow
   3) Single service kitchen: 2-gallon flow
   4) Food waste disposer: 1-gallon flow

d. Retention Times
   1) Commercial kitchen waste/dishwasher: 2.5 hours
   2) Single service kitchen/single serving: 1.5 hours

e. Storage Factors
   1) Fully equipped commercial kitchen/8-hour operation: 1
   2) Fully equipped commercial kitchen/16-hour operation: 2
   3) Fully equipped commercial kitchen/24-hour operation: 3
   4) Single Service Kitchen: 1.5

2.12 LOCATION OF SEWERS IN STREAMS

A. Cover Depth

1. The top of all sewers entering or crossing streams shall be at a sufficient depth below the natural bottom of the stream bed to protect the sewer line. In general, the following cover requirements must be met:

a. One foot of cover where the sewer is located in rock;
b. Three feet of cover in other material (in major streams, more than 3 feet of cover may be required); and
c. In paved stream channels, the top of the sewer line should be placed below the bottom of the channel pavement. Less cover will be approved only if the proposed sewer crossing will not interfere with the future improvements to the stream channel. Reasons for requesting less cover shall be submitted to CH2M HILL for approval prior to construction.

B. Horizontal Location

1. Sewers located along streams shall be located outside of the stream bed and sufficiently removed there from to provide for future possible stream widening and to prevent pollution by siltation during construction.

C. Structures

1. The sewer outfalls, headwalls, manholes, gate boxes, or other structures shall be located so they do not interfere with the free discharge of flood flows of the stream. Structures shall be located a minimum of 10 feet from stormwater basins. If disturbance is made to surfaces, structures shall be adjusted to match grade.

D. Alignment

1. Sewers crossing streams should be designed to cross the stream as nearly perpendicular to the stream flow as possible and shall be free from change in grade. Sewer systems shall be designed to minimize the number of stream crossings.

E. Materials

1. Sewers entering or crossing streams shall be constructed of ductile iron pipe with mechanical joints; specified in Part C “Standard Specifications for Water and Wastewater Construction”, Section 02502 (Ductile Iron Pipe and Fittings). Material used to backfill the trench shall be stone, coarse aggregate, washed gravel, or other materials which will not readily erode, cause siltation, damage pipe during placement, or corrode the pipe.

F. Siltation and Erosion

1. Construction methods that will minimize siltation and erosion shall be employed. The design engineer shall include in the project

specifications the method(s) to be employed in the construction of sewers in or near streams. Such methods shall provide adequate control of siltation and erosion by limiting unnecessary excavation, disturbance or uprooting of trees and vegetation, dumping of soil or debris, or pumping of silt-laden water into the stream. Specifications shall require that cleanup, grading, seeding, and planting or restoration of all work areas shall begin immediately. Exposed areas shall not remain unprotected for more than 7 days.

2.13 AERIAL CROSSINGS

A. Support shall be provided for all joints in pipes utilized for aerial crossings. The supports shall be designed to prevent frost heave, overturning, and settlement. Precautions against freezing, such as insulation and increased slope, shall be provided. Expansion jointing shall be provided between above ground and below ground sewers. Where buried sewers change to aerial sewers, special construction techniques shall be used to minimize frost heaving. For aerial stream crossings, the impact of flood waters and debris shall be considered. The bottom of the pipe should be placed no lower than the 50 year flood elevation. Ductile iron pipe with mechanical joints is required.

2.14 PROTECTION OF WATER SUPPLIES

A. When wastewater sewers are proposed in the vicinity of any water supply facilities, requirements of Part A “Water Distribution System Design Guide” should be used to confirm acceptable isolation distances in addition to the following requirements.

B. Cross-connections Prohibited

1. There shall be no physical connections between a public or private potable water supply system and a sewer, or appurtenance thereto which would permit the passage of any wastewater or polluted water into the potable supply. No water pipe shall pass through or come into contact with any part of a sewer manhole.

C. Horizontal and Vertical Separation

1. Horizontal and Vertical Separation Specifications are in Part C, “Standard Specifications for Water and Wastewater Construction,” Section 02512 (Gravity Sewer Pipe and Fittings). Standard Drawings are in Part D, “Standard Drawings for Water and Sewer Construction at Fort Campbell,” Detail 2015.

D. Crossings

1. Crossing Specifications are in Part C, “Standard Specifications for Water and Wastewater Construction,” Section 02512 (Gravity Sewer Pipe and Fittings). Standard Drawings are in Part D, “Standard Drawings for Water and Sewer Construction at Fort Campbell,” Detail 2015.

2.15 PUMP STATIONS

A. GENERAL

1. Pump stations may be used when gravity flow is not physically possible, or is not feasible for economic reasons. If pump station is chosen for economic reasons, CH2M HILL will consider costs beyond initial capitol cost of infrastructure.

B. GRINDER PUMP STATIONS

1. For low-level flows, a pre-packaged Grinder Pump Station may be used. See Part C, “Standard Specifications for Water and Wastewater Construction” Section 11306 (“Duplex Submersible Grinder Pump Stations”).
2. Grinder Pump Stations shall use a minimum or 2” schedule 80 PVC Force Main. Force Main shall increase in elevations gradually to prevent formation of air pockets in the Force Main.

END OF SECTION

Part C
Standard Specifications For Water and Wastewater Construction

U.S. Army DOC
Fort Campbell

Version No. 3

Additional Parts Include:

Part A: *Water Distribution System Design Guide*

Part B: *Wastewater System Design Guide*

Part D: *Standard Drawings For Water and Wastewater Construction*

February 2007

CH2MHILL

Building 1746
1st Street and Kentucky Avenue
Fort Campbell, KY 42223

SECTION 02080
FIRE HYDRANTS

PART 1 GENERAL

1.01 REFERENCES

A. The following is a list of standards which may be referenced in this section:

1. American Water Works Association (AWWA):
   a. C502, Dry-Barrel Fire Hydrants.
   b. C600, Standard for Installation of Ductile-Iron Water Mains and Their Appurtenances.
2. ASTM International (ASTM): C94, Standard Specification for Ready-Mixed Concrete.

PART 2 PRODUCTS

2.01 HIGH PRESSURE HYDRANTS

A. Hydrant:

1. Break flange or safety top type.
2. Nominal 5-1/4 -inch main valve opening with 6 -inch bottom connections.
3. Conform to AWWA C502, except working pressure of 250 psi.
4. Two 2-1/2-inch hose nozzles.
5. One 5-1/4-inch pumper nozzle.
6. Operating Nut: 1-1/2-inch National Standard pentagon nut.
7. Mechanical joint inlet connection.
8. Red above-ground line.
9. Manufacturers and Products:
   a. Mueller Super Centurion; Model A-423.
   b. American Flow Control; Model B-84-B.

B. Main Valve:

1. Minimum depth of bury 3 feet, or as indicated on Approved Drawings.
2. Equip with O-ring seals.
3. Valve opens on counterclockwise rotation.

2.02 PRECAST CONCRETE PIER BLOCK

A. Nominal dimensions of 8-inch thickness by 16-inch square base.

B. Compressive Strength: 3,000 psi at 28 days.

2.03 GRAVEL FOR DRAINAGE

A. Washed 3/4-inch crushed rock or graded river gravel. Free of organic matter, sand, loam, clay, and other small particles that will restrict water flow through gravel.

2.04 FOUNDATION STABILIZATION MATERIAL

A. Furnish when existing trench material or imported pipe base material will not support soft or flooded spots in excavated trench.

B. Maximum 3-inch hard rock free from excessive clay material, but enough fines to bind larger fragments.

2.05 CONCRETE FOR THRUST BLOCKING

A. Refer to Section 03300, Cast-in-Place Concrete.

2.06 THRUST TIES

A. 3/4-inch diameter steel rods.

B. Duc-Lugs Manufacturer: The Stellar Corp., Columbus, OH.

PART 3 EXECUTION

3.01 GENERAL

A. Install hydrants in accordance with Sections 3.7 and 3.8 of AWWA C600, unless specified otherwise.

3.02 EXCAVATION

A. Excavate to subgrade. Fill over excavated areas with foundation stabilization material. Tamp to provide firm foundation.

3.03 BASE BLOCK

A. Place on firm, level subgrade to ensure uniform support.

3.04 INSTALLATION OF HYDRANTS

A. Locate hydrants to provide accessibility and to minimize potential damage from vehicles.

1. Relocate improperly set hydrants.
2. Hydrant Located Behind Curbs: Set barrel so pumper nozzle or hose nozzle caps are a minimum of 18 inches from gutter face of curb.
3. Hydrant Located in Space Between Curb and Sidewalk: Not less than 8 inches, clear from sidewalks.
4. Hydrant Located Between Sidewalk and Property Line: Minimum clearance 8 inches from sidewalk.
5. Set hydrants so safety flange is a minimum of 2 inches above finished ground or sidewalk level.

B. Place hydrant on base block carefully to prevent the base block from breaking.

C. Joints shall conform to Section 3.4 of AWWA C600 when cast or ductile iron pipe is used.

D. Maintain hydrant in a plumb position during subsequent Work.

3.05 GRAVEL FOR DRAINAGE

A. Place gravel around base block and hydrant bottom in accordance with Section 3.7 of AWWA C600.

3.06 CONCRETE THRUST BLOCKING

A. Place blocking after hydrant is set in final position and join to pipe.

B. Concrete thrust block shall have a minimum of 4 square feet of bearing area against undisturbed earth.

3.07 THRUST TIES

A. Install thrust ties in lieu of concrete thrust blocking when ground surface behind hydrant is less than 2 feet above top of hydrant base.

1. Install two tie rods between main valve and hydrant, water main tee and main valve.
2. Install mechanical joint glands with lugs in joints between hydrant and main line tee.

END OF SECTION

SECTION 02320
TRENCH BACKFILL

PART 1 GENERAL

1.01 REFERENCES

A. The following is a list of standards which may be referenced in this section:

1. American National Standards Institute (ANSI): Z535.1, Safety Color Code.
2. American Public Works Association (APWA): Uniform Color Code for Temporary Marking of Underground Utility Locations.
3. ASTM International (ASTM):
   a. C136, Standard Test Method for Sieve Analysis of Fine and Coarse Aggregates.
   b. D698, Standard Test Methods for Laboratory Compaction Characteristics of Soil Using Standard Effort (12,400 ft-lbf/ft^3 (600 kN-m/m^3)).
   c. D1140, Standard Test Method for Amount of Material in Soils Finer than the No. 200 (75 micrometer) Sieve.
   d. D3776, Standard Test Method for Mass per Unit Area (Weight) of Fabric.
   e. D4253, Standard Test Methods for Maximum Index Density and Unit Weight of Soils Using a Vibratory Table.
   f. D4254, Standard Test Method for Minimum Index Density and Unit Weight of Soils and Calculation of Relative Density.

1.02 DEFINITIONS

A. Base Rock: Granular material upon which manhole bases and other structures are placed.

B. Bedding Material: Granular material upon which pipes are placed.

C. Imported Material: Material obtained by Contractor from source(s) offsite.

D. Lift: Loose (uncompacted) layer of material.

E. Pipe Zone: Backfill zone that includes full trench width and extends from prepared trench bottom to an upper limit above top outside surface of pipe.

F. Prepared Trench Bottom: Graded trench bottom after excavation and installation of stabilization material, if required, but before installation of bedding material.

G. Relative Compaction: The ratio, in percent, of the as-compacted field dry density to the laboratory maximum dry density as determined by ASTM D698. Corrections for oversize material may be applied to either as-compacted field dry density or maximum dry density, as determined by Engineer.

H. Relative Density: As defined by ASTM D4253 and ASTM D4254.

I. Well-Graded: A mixture of particle sizes that has no specific concentration or lack thereof of one or more sizes producing a material type that, when compacted, produces a strong and relatively incompressible soil mass free from detrimental voids. Well-graded does not define any numerical value that must be placed on the coefficient of uniformity, coefficient of curvature, or other specific grain size distribution parameters.

PART 2 PRODUCTS

2.01 MARKING TAPE

A. Nondetectable:

1. Inert polyethylene, impervious to known alkalis, acids, chemical reagents, and solvents likely to be encountered in soil.
2. Thickness: Minimum 4 mils.
3. Width: 6 inches.
4. Identifying Lettering: Minimum 1-inch high, permanent black lettering imprinted continuously over entire length.
5. Manufacturers and Products:
   a. Reef Industries; Terra Tape.
   b. Allen; Markline.

B. Detectable:

1. Solid aluminum foil, visible on unprinted side, encased in protective high visibility, inert polyethylene plastic jacket.
2. Foil Thickness: Minimum 0.35 mils.
3. Laminate Thickness: Minimum 5.5 mils.
4. Width: 6 inches.
5. Identifying Lettering: Minimum 1-inch high, permanent black lettering imprinted continuously over entire length.
6. Joining Clips: Tin or nickel-coated furnished by tape manufacturer.
7. Manufacturers and Products:
   a. Reef Industries; Terra”D”.
   b. Allen; Detectatape.

C. Color: In accordance with APWA Uniform Color Code for Temporary Marking of Underground Facilities.

Color[a]	Facility
Green	Sewers and drain lines
Blue	Water, irrigation, and slurry lines
[a] As specified in ANSI Z53.1, Safety Color Code.	

2.02 TRENCH STABILIZATION MATERIAL

A. Base Rock:

1. Clean, hard, durable 3-inch minus crushed rock or gravel, or pit run, free from clay balls, other organic materials, or debris.
2. Uniformly graded from coarse to fine, less than 8 percent by weight passing the 1/4-inch sieve.

B. Granular Backfill:

1. Clean gravel or crushed rock, reasonably well-graded from coarse to fine.
2. Maximum Particle Size:1-inch.
3. Dry sand may be provided for trenches above maximum groundwater level.

2.03 BEDDING MATERIAL AND PIPE ZONE MATERIAL

A. Unfrozen, friable, and no clay balls, roots, or other organic material.

B. Clean or gravelly sand with less than 5 percent passing No. 200 sieve, as determined in accordance with ASTM D1140 or gravel or crushed rock within maximum particle size and other requirements as follows unless otherwise specified.

1. Pipe Under 18-Inch Diameter: 3/4-inch maximum particle size.
2. Pipe Greater than 18-Inch Diameter: 1-1/2-inch maximum particle size.

2.04 EARTH BACKFILL

A. Excavated material from required excavations free from rocks larger than 3 inches, from roots and other organic matter, ashes, cinders, trash, debris, and other deleterious materials.

B. Material containing more than 10 percent gravel, stones, or shale particles is unacceptable.

C. Provide imported material equivalent quality, if required to accomplish Work.

2.05 SOURCE QUALITY CONTROL

A. Perform gradation analysis in accordance with ASTM C136 for:

1. Earth backfill.
2. Trench stabilization material.
3. Bedding and pipe zone material.

PART 3 EXECUTION

3.01 TRENCH PREPARATION

A. Water Control:

1. Promptly remove and dispose of water entering trench as necessary to grade trench bottom and to compact backfill and install manholes or pipe. Do not place lay pipe in water.
2. Remove water in a manner that minimizes soil erosion from trench sides and bottom.
3. Provide continuous water control until trench backfill is complete.

B. Remove foreign material and backfill contaminated with foreign material that falls into trench.

3.02 TRENCH BOTTOM

A. Firm Subgrade: Grade with hand tools, remove loose and disturbed material, and trim off high areas and ridges left by excavating bucket teeth. Allow space for bedding material.

B. Soft Subgrade: If subgrade is encountered that may require removal to prevent pipe settlement, notify CH2M HILL. CH2M HILL will determine depth of overexcavation, if any required.

3.03 TRENCH STABILIZATION MATERIAL INSTALLATION

A. Rebuild trench bottom with trench stabilization material.

B. Place material over full width of trench in 6-inch lifts to required grade, providing allowance for bedding thickness.

C. Compact each lift so as to provide a firm, unyielding support for the bedding material prior to placing succeeding lifts.

3.04 BEDDING

A. Furnish imported bedding material where, in the opinion of CH2M HILL, excavated material is unsuitable for bedding or insufficient in quantity.

B. Place over the full width of the prepared trench bottom in two equal lifts when the required depth exceeds 8 inches.

C. Hand grade and compact each lift to provide a firm, unyielding surface.

D. Minimum Thickness: As follows, except increase depths listed by 2 inches in areas of rock excavation:

1. Pipe, 15 Inches and Smaller: 4 inches.
2. Pipe, 18 Inches to 36 Inches: 6 inches.
3. Pipe, 42 Inches and Larger: 8 inches.

E. Check grade and correct irregularities in bedding material. Loosen top 1 to 2 inches of compacted bedding material with a rake or by other means to provide a cushion before laying each section of pipe.

F. Install to form continuous and uniform support except at bell holes, if applicable, or minor disturbances resulting from removal of lifting tackle.

G. Bell or Coupling Holes: Excavate in bedding at each joint to permit proper assembly and inspection of joint and to provide uniform bearing along barrel of pipe or conduit.

3.05 BACKFILL PIPE ZONE

A. Upper limit of pipe zone shall not be less than 12 inches.

B. Restrain pipe as necessary to prevent their movement during backfill operations.

C. Place material simultaneously in lifts on both sides of pipe.

1. Pipe 10-Inch and Smaller Diameter: First lift less than or equal to 1/2 pipe diameter.
2. Pipe Over 10-Inch Diameter: Maximum 6-inch lifts.

D. Thoroughly tamp each lift, including area under haunches, with handheld tamping bars supplemented by “walking in” and slicing material under

haunches with a shovel to ensure that voids are completely filled before placing each succeeding lift.

E. After the full depth of the pipe zone material has been placed as specified, compact the material by a minimum of three passes with a vibratory plate compactor only over the area between the sides of the pipe and the trench walls.

F. Do not use power-driven impact compactors to compact pipe zone material.

3.06 MARKING TAPE INSTALLATION

A. Continuously install marking tape along centerline of all buried piping, at depth of 2 feet. Coordinate with piping installation drawings.

1. Detectable Marking Tape: Install with nonmetallic piping and waterlines.
2. Nondetectable Marking Tape: Install with metallic piping.

3.07 BACKFILL ABOVE PIPE ZONE

A. General:

1. Process excavated material to meet specified gradation requirements.
2. Adjust moisture content as necessary to obtain specified compaction.
3. Do not allow backfill to free fall into the trench or allow heavy, sharp pieces of material to be placed as backfill until after at least 2 feet of backfill has been provided over the top of pipe.
4. Use hand-operated vibratory plate compactors for compaction over the top of pipe.
5. Backfill to grade with proper allowances for topsoil, crushed rock surfacing, and pavement thicknesses, wherever applicable.
6. Backfill around structures with same class backfill as specified for adjacent trench unless otherwise approved.

B. Backfill in Non-paved Finish Areas:

1. Backfill trench above the pipe zone with earth fill removed from trench during excavation, in lifts not exceeding thickness of 9 inches.
2. Compact each lift to a minimum of 95 percent relative compaction prior to placing succeeding lifts.

C. Trench Backfill and Surface Restoration requirements under existing or proposed paved areas shall be per Directorate of Public Works Standards and Requirements.

3.08 TRENCH BACKFILL SITE COMPACTION TESTING

A. Field Quality Control Tests by Contractor.

1. In-Place Density Tests: In accordance with ASTM D2167 or D2922 or D2937 or D1556. Beginning one foot above the top of the pipe and extending to the finished subgrade elevation. A sufficient number of tests shall be taken at various depths to confirm that backfill compaction and moisture content specifications are met. The location of the tests shall be selected by the CH2M HILL at random locations along the trench. During placement of materials, test as follows, at a minimum:
   a. Trench Backfill: One test for every 250 cubic yards of trench backfill placed
   b. At least 20 percent of the tests shall be taken within one foot of manholes, water valves or other obstacles.

END OF SECTION

SECTION 02500
CONVEYANCE PIPING - GENERAL

PART 1 GENERAL

1.01 REFERENCES

1. American Water Works Association (AWWA):
   a. C110/A21.10, Ductile-Iron and Gray-Iron Fittings, 3 in. Through 48 in. (75 mm Through 1200 mm), for Water and Other Liquids.
   b. C115/A21.15, Flanged Ductile-Iron Pipe with Ductile-Iron or Gray-Iron Threaded Flanges.
   c. C207, Steel Pipe Flanges for Waterworks Service - Sizes 4 in. Through 144 in. (100 mm Through 3,600 mm).
   d. C213, Fusion-Bonded Epoxy Coating for the Interior and Exterior of Steel Water Pipelines.
   e. C219, Bolted, Sleeve-Type Couplings for Plain-End Pipe.
2. NSF International (NSF): 61B, Drinking Water System Components - Health Effects.

1.02 DESIGN REQUIREMENTS

A. Where pipe class or wall thickness is not indicated, design piping system for maximum stress based on the following test pressure and earth loads:

1. Operating Pressure: 100 psi.
2. Field Hydrostatic Test Pressure: 150 psi.
3. Earth Loads: Per field conditions, as approved by CH2M HILL.
4. Soil Density: Per field conditions, as approved by CH2M HILL.
5. Traffic Loads: H-20.

1.03 DELIVERY, STORAGE, AND HANDLING

A. In accordance with manufacturer’s recommendations.

B. Marking at Plant: Mark each pipe and fitting at plant. Include date of manufacture, manufacturer’s identification, specification standard, diameter of pipe dimension ratio, pipe class, and other information required for type of pipe.

C. Pipe, specials, and fittings received at Project Site in damaged condition will not be accepted.

D. Gasket Storage: Store rubber gaskets in cool, well ventilated place, and do not expose to direct rays of sun. Do not allow contact with oils, fuels, petroleum, or solvents.

E. Store and support pipe securely to prevent accidental rolling and to avoid contact with mud, water, or other deleterious materials.

F. Handling:

1. Pipe shall be handled with proper equipment in a manner to prevent distortion or damage. Use of hooks, chains, wire ropes, or clamps that could damage pipe, damage coating or lining, or kink and bend pipe ends is not permitted.
2. Use heavy canvas, or nylon slings of suitable strength for lifting and supporting materials.
3. Lifting pipe during unloading or lifting into trench shall be done using two slings placed at quarter point of pipe section. Pipe may be lifted using one sling near center of pipe, provided pipe is guided to prevent uncontrolled swinging and no damage will result to pipe or harm to workmen. Slings shall bear uniformly against pipe.
4. Pipe and fittings shall not be stored on rocks or gravel, or other hard material that might damage pipe. This includes storage area and along pipe trench.

PART 2 PRODUCTS

2.01 PIPE

A. As specified in the individual Specification(s) following this section.

2.02 JOINTS

A. As specified in the individual Specification(s) following this section.

2.03 COUPLINGS

A. General:

1. Coupling linings for use in potable water systems shall be in conformance with NSF 61B.
2. Couplings shall be rated for appropriate operating pressure and hydrostatic test pressure.
3. Exposed, bolted, sleeve-type couplings shall be lined and coated with fusion bonded epoxy in accordance with AWWA C213.

B. For Pipe with Flanged Ends:

1. Flanged coupling adapters, in accordance with AWWA C219.
2. Dismantling joints for connecting flanged pipe shall be AWWA C219 compliant. Provide studs and nuts to seal gasket separate and independent from tie-bar restraint system.
3. Rubber expansion joints shall allow compression, extension, and lateral deflection of the pipes being joined.

C. Bolting Materials: Type 304 stainless steel.

2.04 SERVICE SADDLES

A. Single or double strap design rated for 150 psi minimum working pressure.

2.05 SLAB, FLOOR, WALL, AND ROOF PENETRATIONS

A. Modular Mechanical Seal:

1. Type: Interconnected synthetic rubber links shaped and sized to continuously fill annular space between pipe and wall sleeve opening.
2. Assemble interconnected rubber links with Type 316 stainless steel bolts, nuts, and pressure plates.
3. Size modular mechanical seals according to manufacturer's instructions for the size of pipes shown to provide a watertight seal between pipe and wall sleeve opening.
4. Manufacturers and Products:
   a. Thunderline/LinkSeal, Div. Of PSI, Houston, TX; Link Seal.
   b. Calpico, Inc., South San Francisco, California; Sealing Linx.
   c. Advance Products and Systems, Lafayette, Louisiana; Innerlynx.

B. Wall Sleeves:

1. Diameter, ends, and length shall be shown on Drawings.
2. Shall include integral seep ring to minimize seepage between metal sleeve and concrete.

C. Wall Couplings:

1. Diameter, ends, and length shall be shown on Drawings.
2. Wall couplings shall provide flexible mechanical joint.
3. Body and end rings shall be coated with fusion bonded epoxy.
4. Body shall include integral seep ring.
5. Shall comply with AWWA C219.

D. If core drilling is required for penetrations of existing concrete walls or slabs, locations of drilling shall be determined by radiograph to avoid damage to reinforcing steel and conduits.

2.06 FLANGES, FLANGE GASKETS, AND BOLTING MATERIALS

A. As specified in individual specifications following this section.

B. Flanges, bolting materials, and flange gaskets for steel flanges shall conform to AWWA C207.

C. Flanges, bolting materials, and flange gaskets for ductile iron flanges shall conform to AWWA C110 and AWWA C115.

2.07 FLANGE INSULATION KITS AND INSULATING COUPLINGS

A. Flange Insulation Kit Manufacturers:

1. Pipeline Seal and Insulator, Inc., Houston, Texas.
2. Central Plastics Co., Shawnee, Oklahoma.
3. Calpico, Inc., South San Francisco, California.
4. Advance Products and Systems, Lafayette, Louisiana.

B. Insulating Couplings:

1. Bolt holes, sized as required.
2. Manufacturers and Products:
   a. Dresser Industries; Style 39.
   b. Baker Coupling Company, Inc.; Series 216.
   c. Romac Industries; Style IC501.

PART 3 EXECUTION

3.01 GENERAL

A. Notify CH2M HILL at least 2 weeks prior to field fabrication of pipe or fittings.

B. Furnish feeler gauges of proper size, type, and shape for use during installation for each type of pipe furnished.

3.02 EXAMINATION

A. Verify size, material, joint types, elevation, and horizontal location of existing pipeline to be connected to new pipeline or new equipment.

B. Inspect size and location of structure penetrations to verify adequacy of wall pipes, sleeves, and other openings.

C. Damaged Coatings and Linings: Repair using coating and lining materials in accordance with manufacturer's instructions.

3.03 INSTALLATION

A. General:

1. Join pipe and fittings in accordance with manufacturer's instructions, unless otherwise shown or specified.
2. Install individual pipe lengths in according to approved lay diagram. Misplaced pipe shall be removed and replaced.
3. Inspect pipe and fittings before installation, clean ends thoroughly, remove foreign matter and dirt from inside.
4. Flanged Joints:
   a. Install perpendicular to pipe centerline.
   b. Bolt Holes: Straddle vertical centerline, aligned with connecting equipment flanges or as shown on Drawings.
   c. Use torque-limiting wrenches to provide uniform bearing and proper bolt tightness.
   d. Flange Type: Use flat-faced flange when joining with flat-faced ductile or cast iron flange.
   e. Tighten coupling bolts progressively; drawing up bolts on opposite sides gradually until bolts have uniform tightness.
5. Couplings:
   a. Install in accordance with manufacturer's written instructions.
   b. Before coupling, clean pipe holdback area of oil, scale, rust, and dirt.
   c. Remove pipe coating, if necessary, to obtain smooth surface.
   d. Clean gaskets before installation.
   e. If necessary, lubricate with gasket lubricant for installation on pipe ends.
   f. Tighten coupling bolts progressively; drawing up bolts on opposite sides gradually until bolts have uniform tightness.

B. Buried Pressure Pipe:

1. Concrete Encased or Embedded Pipe: Do not encase joints in concrete, unless specifically shown on Drawings.
2. Placement:
   a. Keep trench dry until pipe laying and joining is completed.
   b. Exercise care when lowering pipe into trench to prevent twisting or damage to pipe.
   c. Measure for grade at pipe invert, not at top of pipe.
   d. Excavate trench bottom and sides of ample dimensions to permit proper joining, welding, visual inspection, and testing of entire joint.

e. Prevent foreign material from entering pipe during placement.
f. Close and block open end of last laid pipe section when placement operations are not in progress and at close of day's work.
g. In general, lay pipe upgrade with bell ends pointing in direction of laying.
h. Deflect pipe at joints for pipelines laid on a curve using unsymmetrical closure of spigot into bell. If joint deflection of standard pipe lengths will not accommodate horizontal or vertical curves in alignment, provide:
   1) Shorter pipe lengths.
   2) Special mitered joints.
   3) Standard or special fabricated bends.
i. Check gasket position with feeler gauge to assure proper seating.
j. After joint has been made, check pipe alignment and grade.
k. Place sufficient pipe zone material to secure pipe from movement before next joint is installed.
l. Prevent uplift and floating of pipe prior to backfilling.

3. Tolerances:
   a. Deflection From Horizontal Line: Maximum 2 inches.
   b. Deflection From Vertical Line: Maximum 1 inch.
   c. Joint Deflection: Maximum of 75 percent of manufacturer's recommendation.
   d. Horizontal position of pipe centerline on alignment around curves maximum variation of 1 foot from position shown.
4. Cover Over Top of Pipe: Minimum 3 feet, unless otherwise shown.

3.04 THRUST RESTRAINT

A. Location: At pipeline tees, plugs, caps, bends, and locations where unbalanced forces exist.

B. Thrust Blocking:

1. Place only where shown on Standard Drawing 2005.
2. Quantity of Concrete: Sufficient to cover bearing area of pipe and provide required soil bearing area as shown on Standard Drawing 2005.
3. Place blocking so pipe and fitting joints are accessible for repairs.
4. Place concrete in accordance with Section 03300, Cast-in-Place Concrete.

3.05 PLACEMENT OF PIPE LOCATING TAPE

A. Place pipe locating tape in accordance with Section 02320, Trench Backfill.

3.06 PIPE BEDDING AND ZONE MATERIAL

A. Place pipe bedding and pipe zone material in accordance with Section 02320, Trench Backfill.

3.07 FIELD QUALITY CONTROL

A. Pressure Leakage Testing: As specified in the individual Specification(s) following this section.

3.08 CLEANING AND DISINFECTION

A. Following assembly and testing, and prior to disinfection and final acceptance, flush pipelines with water at 2.5 fps minimum flushing velocity until foreign matter is removed.

B. If impractical to flush large diameter pipe at 2.5 fps, clean pipe in-place from inside by brushing and sweeping, then flush or blow line at lower velocity.

C. Remove accumulated debris through blowoffs 2 inches and larger or by removing spools and valves from piping.

D. Disinfection: As specified in Section 02519, Disinfection of Water Systems.

END OF SECTION

SECTION 02502
DUCTILE IRON PIPE AND FITTINGS

PART 1 GENERAL

1.01 REFERENCES

A. The following is a list of standards that may be referenced in this section:

1. American Association of State Highway and Transportation Officials (AASHTO):
   a. T99, Standard Specification for the Moisture-Density Relations of Soils Using a 2.5 kg (5.5LB) Hammer and a 305mm (12 in.) Drop.
2. ASTM International (ASTM)
   a. A307, Standard Specification for Carbon Steel Bolts and Studs, 60,000 psi Tensile Strength.
   b. A563, Standard Specification for Carbon and Alloy Steel Nuts.
   c. B16.21, Standard Specification for Nonmetallic Flat Gaskets for Pipe Flanges.
   d. D882, Standard Test Method for Tensile Properties of Thin Plastic Sheeting.
   e. D1330, Standard Specification for Rubber Sheet Gaskets.
   f. D1922, Standard Test Method for Propagation Tear Resistance of Plastic Film and Thin Sheeting by Pendulum Method.
   g. D2000, Standard Classification System for Rubber Products in Automotive Applications.
   h. D4976, Standard Specification for Polyethylene Plastics Molding and Extrusion Materials.
3. American Water Works Association (AWWA):
   a. C104, Cement-Mortar Lining for Ductile Iron Pipe and Fittings for Water.
   b. C105, Polyethylene Encasement for Ductile Iron Pipe Systems.
   c. C110, Ductile Iron and Grey Iron-Fittings, 3-inch through 48-inch.
   d. C111, Rubber-Gasket Joints for Ductile Iron Pressure Pipe and Fittings.
   e. C115, Flanged Ductile Iron Pipe with Ductile Iron and Grey Iron Fittings.
   f. C150, Thickness Design of Ductile-Iron Pipe.
   g. C151, Ductile-Iron Pipe. Centrifugally Cast, for Water.
   h. C153, Ductile Iron Compact Fittings, 3-inch through 24-inch and 54-inch through 64-inch for Water Service.

i. C207, Steel Pipe Flanges for Waterworks Service, Sizes 4-inch through 144-inch (100mm through 3600mm).
j. C600, Installation of Ductile-Iron Water Mains and Their Appurtenances.
k. C606, Grooved End, Shouldered Joints.

4. Ductile Iron Pipe Research Institute (DIPRA).

PART 2 PRODUCTS

2.01 MATERIALS

A. Pipe:

1. General:
   a. Centrifugally cast, grade 60-42-10 iron.
   b. Meet requirements of AWWA C150, C153 and C111.
   c. Lined and coated as specified.
2. Pressure rating of pipe from 4 inches to 24 inches in diameter shall be 250 psi minimum.
3. Pipe wall thickness of threaded pipe for a flanged pipe end shall be minimum special thickness Class 53 from 12-inch to 54-inch diameter pipe in accordance with AWWA C115.
4. Grooved end pipe, for all pipe diameters, shall be minimum Special Class 53.
5. Pipe shall be new and recently manufactured. Refurbished pipe shall not be provided.

B. Joints:

1. Push-On Joint: Rated at minimum working pressure equal to pipe material design.
2. Restrained Joint:
   a. Manufactured proprietary joint that mechanically restrains pipe to adjoining pipe.
   b. Manufacturers and Products:
      1) American Cast Iron Pipe; Flex-Ring and Lok-Ring.
      2) Pacific States Pipe; Thrust-Lock.
      3) U.S. Pipe; TR Flex.
3. Mechanical Wedge Action Type Joint:
   a. Use only in areas where adjoining to fixed points where laying length is determined in field.
   b. Prior to purchase and installation, type and application of this joint shall be approved by CH2M HILL.
4. Use of set screws for restraint or field-lock gaskets shall not be allowed.

C. Fittings:

1. Ductile Iron, Push-On, Flanged or Restrained Joint: In accordance with AWWA C153, 350 psi minimum working pressure for 3- to 24-inch fittings.
2. Mechanical Joint Fittings: In accordance with AWWA C111.
3. Fittings shall be new and recently manufactured. Refurbished fittings will not be accepted.

D. Welded Outlet: Only weld to pipe in manufacturer's shop.

E. Lining:

1. Pipe and fittings for clean water applications shall be cement lined and asphaltic seal coated in accordance with AWWA C104.
2. Pipe and fittings for sanitary sewer and wastewater applications shall be lined internally with a flexible lining and shall be:
   a. Protecto 401 Ceramic Epoxy as manufactured by Vulcan Painters, Inc. of Birmingham, AL, thickness according to manufacturer's standard, without exception.

F. Coating: Asphaltic type, 1 mil thick, in accordance with AWWA C151, C115, C110 and C153.

G. Polyethylene Encasement:

1. Virgin polyethylene raw material conforming to requirements of ASTM D4976.
2. Elongation: 800 percent, minimum, in machine and transverse direction (ASTM D882).
3. Tensile Strength: 3,600 psi, minimum.
4. Dielectric Strength: 800V per mil-thickness, minimum.
5. Propagation Tear Resistance: 2,550-grams force (gf), minimum, in machine and transverse direction (ASTM D1922).
6. Tube form, conforming to AWWA C105.
7. Film shall have minimum thickness of 0.008 inch (8 ml).

H. Bolting:

1. Bolts for flanged connections shall be carbon steel, ASTM A307, Grade A hex bolts and ASTM A563, Grade A hex head nuts.
2. Bolts for grooved end connections shall be manufacturer's standard.

I. Gaskets:

1. Gaskets for flat faced 150 and 250 psi working pressure flanges shall be 1/8 inch thick, red rubber (SBR), hardness 80 (Shore A), rated to 200 degrees F, conforming to ANSI B16.21, AWWA C207, and ASTM D1330, Grades 1 and 2.
2. Gaskets for grooved end joints shall be Halogenated butyl, conforming to ASTM D2000 and AWWA C606.

2.02 SOURCE QUALITY CONTROL

A. Factory Tests: In accordance with AWWA Standards.

PART 3 EXECUTION

3.01 EXAMINATION

A. Inspect pipe and fittings to ensure no cracked, broken, or otherwise defective materials are being used.

3.02 PREPARATION

A. Trench Grade:

1. Grade bottom of trench by hand to specified line and grade, with proper allowance for pipe thickness and pipe base, when specified. Trench bottom shall form a continuous and uniform bearing and support for pipe between bell holes.
2. Before laying each section of pipe, check grade and correct irregularities found. Grade may be disturbed for removal of lifting tackle.

B. Bell (Joint) Holes: At each joint, dig bell holes of ample dimensions in bottom of trench, and at sides where necessary, to permit joint to be made properly and to permit easy visual inspection of entire joint.

3.03 INSTALLATION

A. General:

1. Provide and use proper implements, tools, and facilities for safe and proper prosecution of Work.
2. Lower pipe, fittings, and appurtenances into trench, piece by piece, by means of a crane, slings, or other suitable tools and equipment, in such a manner as to prevent damage to pipe materials, protective coatings and linings.
3. Do not drop or dump pipe materials into trench.

B. Cleaning Pipe and Fittings:

1. Remove lumps, blisters, and excess coal tar coating from bell and spigot ends of each pipe. Wire brush outside of spigot and inside of bell and wipe clean, dry, and free from oil and grease before pipe is laid.
2. Wipe ends of mechanical joint pipe and fittings and of rubber gasket joint pipe and fittings clean of dirt, grease, and foreign matter.

C. Laying Pipe:

1. Direction of Laying: Lay pipe with bell end facing in direction of laying. For lines on an appreciable slope, face bells upgrade at discretion of CH2M HILL.
2. Mechanical Joint, Push-On Joint, and Restrained Joint Pipe: After first length of pipe is installed in trench, secure pipe in place with approved backfill material tamped under and along sides to prevent movement. Keep ends clear of backfill. After each section is jointed, place backfill as specified to prevent movement.
3. Take precautions necessary to prevent floating of pipe prior to completion of backfill operation.
4. When using movable trench shield, take necessary precautions to prevent pipe joints from pulling apart when moving shield ahead.
5. Do not allow foreign material to enter pipe while it is being placed in trench.
6. Close and block open end of last laid section of pipe to prevent entry of foreign material or creep of gasketed joints when laying operations are not in progress, at close of day's work, or whenever workers are absent from job.

D. Joining Push-On Joint Pipe and Mechanical Joint Fittings:

1. Join pipe with push-on joints and mechanical joint fittings in strict accordance with manufacturer's recommendations.
2. Provide special tools and devices, such as, special jacks, chokers, and similar items required for installation.
3. Lubricate pipe gaskets using lubricant furnished by pipe manufacturer. No substitutes will be permitted.
4. Clean ends of fittings of dirt, mud, and foreign matter by washing with water and scrubbing with a wire brush, after which, slip gland and gasket on plain end of pipe. If necessary, lubricate end of pipe to facilitate sliding gasket in place, then guide fitting onto spigot of pipe previously laid.

E. Cutting Pipe:

1. General: Cut pipe for inserting valves, fittings, or closure pieces in a neat and workmanlike manner without damaging pipe or lining and so as to leave a smooth end, at right angles to axis of pipe.
2. Pipe: Cut pipe with milling type cutter or saw. Do not flame cut.
3. Dressing Cut Ends: Dress cut end of mechanical joint pipe to remove sharp edges or projections, which may damage rubber gasket. Dress cut ends of push-on joint pipe by beveling, as recommended by manufacturer.

F. Field Welding:

1. Use of field welded outlets will not be allowed. Welding for outlets shall be performed only in pipe manufacturer's shop.
2. Field installed outlets may be installed with saddle approved by CH2M HILL. Opening in pipe shall be machined cut and not with cutting torch.
3. Field welding of bars for restrained joint systems will not be allowed. All welding shall be performed in pipe manufacturer's shop.

G. Line and Grade:

1. Minimum Pipe Cover: 3 feet, unless otherwise indicated.
2. No high points will be allowed between air valves.
3. Maintain pipe grade between invert elevations to provide minimum clearance at air valve locations of 4 feet from existing ground surface to top of pipe.
4. Install air valves as shown on Standard Drawing 2090 and field verify intervening low points. When field conditions warrant, exceptions may be made upon approval of CH2M HILL.
5. Deviations exceeding 6 inches from specified line or 1 inch from specified grade will not be allowed without express approval of CH2M HILL.
6. Pipeline sections that are not installed to elevations shown or installed as approved by CH2M HILL shall be reinstalled to proper elevation.

H. Thrust Restraint: All fittings for bends or connections for pressure piping, including water mains and the wastewater lift station's force main, shall have restrained joints or concrete thrust blocks, at the Contractor's option. For restrained joints, the length of pipe restraint shall be continued to the next joint beyond the minimum distances of 60-feet for 90-degree bends or tees, and 40 feet from all other bends, fittings and valves.

I. Polyethylene Encasement:

1. Encase pipe, fittings, and valves where specified in accordance with AWWA C105, Method A.
2. Cut polyethylene tube approximately 2 feet longer than pipe length.
3. Slip tube around pipe, centering to provide 1-foot overlap on each adjacent section.
4. Pull encasement to take out slack and wrap snug around pipe.
5. Secure overlap in place and fold at quarter points of pipe length.
6. Wrap and tape encasement snug around fittings and valves.

3.04 HYDROSTATIC TESTING

A. Pipeline Hydrostatic Test:

1. General:
   a. Notify CH2M HILL in writing 5 days in advance of testing. Perform testing in presence of CH2M HILL.
   b. Test newly installed pipelines. Using water as test medium, pipes shall successfully pass a leakage test prior to acceptance.
   c. Furnish testing equipment and perform tests in manner satisfactory to CH2M HILL. Testing equipment shall provide observable and accurate measurements of leakage under specified conditions.
   d. Isolate new pipelines that are connected to existing pipelines.
   e. Conduct tests on entire pipeline after trench has been backfilled. Testing may be done prior to placement of asphaltic concrete or roadway structural section.
   f. Contractor may, if field conditions permit and as determined by CH2M HILL, partially backfill trench and leave joints open for inspection and conduct an initial service leak test. Hydrostatic test shall not, however, be conducted until backfilling has been completed.
2. Procedure:
   a. Maximum filling velocity shall not exceed 0.25 foot per second**,** calculated based on the full area of pipe.
   b. Expel air from pipe system during filling. Expel air through air release valve or through corporation stop installed at high points and other strategic points.
   c. Test pressure shall be 150 psi as measured at low point of pipeline.
   d. Apply and maintain specified test pressure with hydraulic force pump. Valve off piping system when test pressure is reached.

e. Maintain hydrostatic test pressure continuously for 2 hours minimum, adding additional make-up water only as necessary to restore test pressure.

f. Determine actual leakage by measuring quantity of water necessary to maintain specified test pressure for duration of test.

g. If measured leakage exceeds allowable leakage or if leaks are visible, repair defective pipe section and repeat hydrostatic test.

3. Maximum Allowable Leakage:

$$L = \frac{SD(P)^{1/2}}{133{,}200}$$

where:

L	=	Allowable leakage, in gallons per hour.
S	=	Length of pipe tested, in feet.
D	=	Nominal diameter of pipe, in inches.
P	=	Test pressure during leakage test, in pounds per square inch.

END OF SECTION

HYDROSTATIC/PNEUMATIC LEAK TEST RECORD (FOR EXPOSED PRESSURE PIPING)

DATE OF TEST: _____

TEST NO: _____

RETEST: YES ☐ NO ☐

PROJECT: _____ PROJECT NO: _____

CONTRACTOR: _____ INSPECTOR: _____
(PRINT)

Pipeline Identification: _____

Location Of Test: _____

Test Specification: _____

Type of Test:
- ☐ Visual Examination
- ☒ Pneumatic/Vacuum
- ☐ Initial Service

Allowable Leakage: _____

Test Pressure: -10" Hg psi

Test Start Time: _____ Test Finish Time: _____

Test Duration: _____ hours

Test: Pass _____ Fail _____

Remarks:

Contractor Certification:

_____
Signature

_____
Title

CH2M HILL Representative:

_____
Signature

_____
Title

Distribution
(1) Engineer
(2) Contractor
(3) CH2M HILL

HYDROSTATIC/PNEUMATIC LEAK TEST RECORD (FOR EXPOSED PRESSURE PIPING)

DATE OF TEST: _____

TEST NO: _____

RETEST: YES ☐ NO ☐

PROJECT: _____ PROJECT NO: _____

CONTRACTOR: _____ INSPECTOR: _____
(PRINT)

Pipeline Identification: _____

Location Of Test: _____

Test Specification: 4 psi / 10 min

Type of Test:
- ☐ Visual Examination
- ☒ Pneumatic/Vacumn
- ☐ Initial Service

Allowable Leakage: _____

Test Pressure: _____ psi

Test Start Time: _____ Test Finish Time: _____

Test Duration: _____ hours

Test: Pass _____ Fail _____

Remarks:

Contractor Certification:

_____
Signature

_____
Title

CH2M HILL Representative:

_____
Signature

_____
Title

Distribution
(1) Engineer
(2) Contractor
(3) CH2M HILL

HYDROSTATIC/PNEUMATIC LEAK TEST RECORD (FOR EXPOSED PRESSURE PIPING)

DATE OF TEST: _____

TEST NO: _____

RETEST: YES ☐ NO ☐

PROJECT: _____ PROJECT NO: _____

CONTRACTOR: _____ INSPECTOR: _____
(PRINT)

Pipeline Identification: _____

Location Of Test: _____

Test Specification: - 10 in hg / 2 min

Type of Test:
- ☐ Visual Examination
- ☐ Pneumatic/Vacumn
- ☐ Initial Service

Allowable Leakage: _____

Test Pressure: _____ psi

Test Start Time: _____ Test Finish Time: _____

Test Duration: _____ hours

Test: Pass _____ Fail _____

Remarks:

Contractor Certification:

_____
Signature

_____
Title

CH2M HILL Representative:

_____
Signature

_____
Title

Distribution
(1) Engineer
(2) Contractor
(3) CH2M HILL

HYDROSTATIC LEAK TEST RECORD
FOR BURIED WATER & WASTEWATER PRESSURE PIPING
(See Specification for procedures to use with other types of pipe.)

DATE OF TEST: _____

TEST NO: _____

RETEST: YES ☐ NO ☐

PROJECT: _____ PROJECT NO: _____

CONTRACTOR: _____ INSPECTOR: _____
(Print)

Pipeline Identification: _____

Location of Test: _____

Test From: _____ (Sta) To: _____ (Sta) Test Fluid: _____

Test Specification: 150 PSI / 2hrs

Allowable Leakage (L) Test Computation

$$L = \frac{SD\,(P)^{1/2}}{133{,}200}$$

Length of Pipe to Be Tested (S): _____ Feet

Nominal Diameter Of Pipe (D): _____ Inches

Average Test Pressure (P): _____ Psi

$$L = \frac{SD\,(P)^{1/2}}{133{,}200} = (S)\ ____\ \times (D)\ ____\ \times (P)^{1/2}\ ____\ = (L)\ ____\ \text{Gph}$$

Test Start Time: _____ Test End Time: _____

Test Duration (T): _____ Hours

Total Allowable Loss = (L) _____ X (T) _____ = _____ Gallons

Fluid Required To Maintain Test Pressure: _____ Gallons

Test: Pass _____ Fail _____

Remarks:

Contractor Certification:

_____
Signature

_____
Title

CH2M HILL Representative:

_____
Signature

_____
Title

Distribution
(1) Engineer
(2) Contractor
(3) CH2M HILL

HYDROSTATIC LEAK TEST RECORD
FOR BURIED WATER & WASTEWATER PRESSURE PIPING

DATE OF TEST: _____

TEST NO: _____

RETEST: YES ☐ NO ☐

PROJECT: _____ PROJECT NO: _____

CONTRACTOR: _____ INSPECTOR: _____
(Print)

Pipeline Identification: _____

Location of Test: _____

Test From: _____ (Sta) To: _____ (Sta) Test Fluid: _____

Test Specification: _____

Allowable Leakage (L) Test Computation

$$L = \frac{SD(P)^{1/2}}{133{,}200}$$

Length of Pipe to Be Tested (S): _____ Feet

Nominal Diameter Of Pipe (D): _____ Inches

Average Test Pressure (P): _____ Psi

$$L = \frac{SD(P)^{1/2}}{133{,}200} = (S)\ ____\ \times (D)\ \frac{_____}{133{,}200} \times (P)^{1/2}\ ____\ = (L)\ ____\ \text{Gph}$$

Test Start Time: _____ Test End Time: _____

Test Duration (T): _____ Hours

Total Allowable Loss = (L) _____ X (T) _____ = _____ Gallons

Fluid Required To Maintain Test Pressure: _____ Gallons

Test: Pass _____ Fail _____

Remarks:

Contractor Certification:

_____
Signature

_____
Title

CH2M HILL Representative:

_____
Signature

_____
Title

Distribution
(1) Engineer
(2) Contractor
(3) CH2M HILL

SECTION 02509
POLYVINYL CHLORIDE (PVC) PRESSURE PIPE AND FITTINGS

PART 1 GENERAL

1.01 REFERENCES

A. The following is a list of standards which may be referenced in this section:

1. American Water Works Association (AWWA):
   a. C110, Ductile-Iron and Gray-Iron Fittings, 3 inch Through 48 inch (75 mm Through 1200 mm), for Water and Other Liquids.
   b. C605, Underground Installation of Polyvinyl Chloride (PVC) Pressure Pipe and Fittings for Water.
   c. C900, Polyvinyl Chloride (PVC) Pressure Pipe and Fabricated Fittings, 4 inch Through 12 inch (100 mm Through 300 mm), for Water Distribution.
   d. Manual M23, PVC Pipe - Design and Installation.
2. NSF International (NSF).

PART 2 PRODUCTS

2.01 MATERIALS

A. Pipe:

1. PVC pipe for water mains 6-inches diameter or larger, conforming to requirements of AWWA C900.
2. DR shall be for 150 psi rating (DR-18).
3. Pipe to be used for potable water conveyance shall be manufactured from National Sanitation Foundation (NSF) approved compounds.

B. Joints:

1. Rubber gasketed.
2. Conform to AWWA C900.

C. Fittings: Ductile iron, conforming to AWWA C153 or C110.

D. Service Saddles:

1. Double strap type with minimum strap width of 2 inches.
2. Straps shall be Type 304 stainless steel. Saddles shall be ductile iron, epoxy-coated, 10 mils minimum thickness.
3. Minimum Pressure Rating: 125 psi.

PART 3 EXECUTION

3.01 INSTALLATION

A. In accordance with AWWA C605.

B. Joints:

1. Rubber Gasketed: In accordance with manufacturer's written instructions.
2. Restrained Joint Systems: In accordance with manufacturer's written instructions.

C. Pipe Bending for Horizontal or Vertical Curves:

1. Radius of curves shall not exceed 75 percent of manufacturer's recommended values.
2. Use blocks or braces at pipe joints to ensure axial deflection in gasketed or mechanical joints does not exceed allowable deflection.

D. Maximum Joint Deflection: 75 percent of manufacturer's recommended values.

3.02 INSPECTION AND HYDROSTATIC TESTING

A. General:

1. Notify CH2M HILL in writing at least 5 days in advance of testing. Perform testing in presence of CH2M HILL.
2. Using water as test medium, all newly installed pipelines shall successfully pass hydrostatic leakage test prior to acceptance.
3. Conduct field hydrostatic test on buried piping after trench has been completely backfilled. Testing may, as approved by CH2M HILL, be done prior to placement of asphaltic concrete or roadway structural section.
4. Contractor may, if field conditions permit and as approved by CH2M HILL, partially backfill trench and leave joints open for inspection and conduct initial service leak test. Final field hydrostatic test shall not, however, be conducted until backfilling has been completed as specified above.
5. Install temporary thrust blocking or other restraint as necessary to prevent movement of pipe and protect adjacent piping or equipment. Make necessary taps in piping prior to testing.
6. Wait a minimum of 5 days after concrete thrust blocking is installed to perform pressure tests. If high-early strength cement is used for thrust blocking, wait may be reduced to 2 days.

7. Prior to test, remove or suitably isolate appurtenant instruments or devices that could be damaged by pressure testing.
8. New Piping Connected to Existing Piping: Isolate new piping with grooved-end pipe caps, blind flanges, or other means as acceptable to Engineer.

B. Hydrostatic Testing Procedure:

1. Furnish testing equipment, as approved by CH2M HILL, which provides observable and accurate measurements of leakage under specified conditions.
2. Maximum Filling Velocity: 0.25 foot per second calculated based on full area of pipe.
3. Expel air from piping system during filling.
4. Test Pressure: 150 psi as measured at low point of pipeline.
5. Apply and maintain specified test pressure with hydraulic force pump. Valve off piping system when test pressure is reached.
6. Maintain hydrostatic test pressure continuously for 2 hours minimum, adding make-up water only as necessary to restore test pressure.
7. Determine actual leakage by measuring quantity of water necessary to maintain specified test pressure for duration of test.

C. Maximum Allowable Leakage:

$$L = \frac{SD(P)^{1/2}}{133{,}200}$$

where:

L	=	Allowable leakage, in gallons per hour.
S	=	Length of pipe tested, in feet.
D	=	Nominal diameter of pipe, in inches.
P	=	Test pressure during leakage test, in pounds per square inch.

END OF SECTION

DUCTILE IRON AND PVC PRESSURE PIPE TEST REPORT

Date: _____

Pipe Section or Joint Tested: _____

Test Pressure at 1 hour: _____

Test Pressure at 2 hours: _____

Length of Test: _____

Pressure or Water Loss: _____

Leaks Noted:

_____

_____

_____

_____

Repair/Replacement Performed to Remedy Excessive Leakage:

_____

_____

_____

_____

_____

Customer Signature	CH2MHILL Site Engineer Signature
Customer Name	CH2MHILL Site Engineer Name

HYDROSTATIC LEAK TEST RECORD FOR BURIED WATER & WASTEWATER PRESSURE PIPING

DATE OF TEST: _____

TEST NO: _____

RETEST: YES ☐ NO ☐

PROJECT: _____ PROJECT NO: _____

CONTRACTOR: _____ INSPECTOR: _____
(Print)

Pipeline Identification: _____

Location of Test: _____

Test From: _____ (Sta) To: _____ (Sta) Test Fluid: _____

Test Specification: _____

Allowable Leakage (L) Test Computation

$$L = \frac{SD(P)^{1/2}}{133{,}200}$$

Length of Pipe to Be Tested (S): _____ Feet

Nominal Diameter Of Pipe (D): _____ Inches

Average Test Pressure (P): _____ Psi

$$L = \frac{SD(P)^{1/2}}{133{,}200} = (S)\ ____\ \times (D)\ \frac{_____}{133{,}200} \times (P)^{1/2}\ ____\ = (L)\ ____\ \text{Gph}$$

Test Start Time: _____ Test End Time: _____

Test Duration (T): _____ Hours

Total Allowable Loss = (L) _____ X (T) _____ = _____ Gallons

Fluid Required To Maintain Test Pressure: _____ Gallons

Test: Pass _____ Fail _____

Remarks:

Contractor Certification:

_____
Signature

_____
Title

CH2M HILL Representative:

_____
Signature

_____
Title

Distribution
(1) Engineer
(2) Contractor
(3) CH2M HILL

CH2MHILL

HYDROSTATIC/PNEUMATIC LEAK TEST RECORD (FOR EXPOSED PRESSURE PIPING)

DATE OF TEST: _____

TEST NO: _____

RETEST: YES ☐ NO ☐

PROJECT: _____ PROJECT NO: _____

CONTRACTOR: _____ INSPECTOR: _____
(PRINT)

Pipeline Identification: _____

Location Of Test: _____

Test Specification: _____

Type of Test:
- ☐ Visual Examination
- ☐ Pneumatic/Vacuum
- ☐ Initial Service

Allowable Leakage: _____

Test Pressure: _____ psi

Test Start Time: _____ Test Finish Time: _____

Test Duration: _____ hours

Test: Pass _____ Fail _____

Remarks:

Contractor Certification:

_____
Signature

_____
Title

CH2M HILL Representative:

_____
Signature

_____
Title

Distribution
(1) Engineer
(2) Contractor
(3) CH2M HILL

SECTION 02512
GRAVITY SEWER PIPE AND FITTINGS

PART 1 GENERAL

1.01 REFERENCES

A. The following is a list of standards which may be referenced in this section:

1. American Water Works Association (AWWA):
   a. C105, Polyethylene Encasement for Ductile Iron Pipe Systems.
   b. C110, Ductile-Iron and Gray-Iron Fittings, 3 in. Through 48 in. (75 mm through 1200 mm), for Water.
   c. C111, Rubber-Gasket Joints for Ductile-Iron Pressure Pipe and Fittings.
   d. C205, Cement-Mortar Protective Lining and Coating for Steel Water Pipe - 4 in. (100 mm) and Larger - Shop Applied.
   e. C208, Dimensions for Fabricated Steel Water Pipe Fittings.
   f. C302, Reinforced Concrete Pressure Pipe, Noncylinder Type.
   g. C900, Polyvinyl Chloride (PVC) Pressure Pipe and Fabricated Fittings, 4 in. Through 12 in. (100 mm Through 300 mm), for Water Distribution.
2. ASTM International (ASTM):
   a. A615/A615M, Standard Specification for Deformed and Plain Billet-Steel Bars for Concrete Reinforcement.
   b. A746, Standard Specification for Ductile Iron Gravity Sewer Pipe.
   c. C76, Standard Specification for Reinforced Concrete Culvert, Storm Drain, and Sewer Pipe.
   d. C150, Standard Specification for Portland Cement.
   e. C151, Ductile-Iron Pipe, Centrifugally Cast, for Water.
   f. C361, Standard Specification for Reinforced Concrete Low-Head Pressure Pipe.
   g. C425, Standard Specification for Compression Joints for Vitrified Clay Pipe and Fittings.
   h. C443, Standard Specification for Joints for Circular Concrete Sewer and Culvert Pipe, Using Rubber Gaskets.
   i. C596, Test Method for Drying Shrinkage of Mortar Containing Hydraulic Cement.
   j. C700, Standard Specification for Vitrified Clay Pipe, Extra Strength, Standard Strength, and Perforated.
   k. D16, Standard Terminology for Paint, Related Coatings, Materials, and Applications.
   l. D1248, Standard Specification for Polyethylene Plastics Extrusion Materials for Wire and Cable.

m. D1784, Standard Specification for Rigid Poly (Vinyl Chloride) (PVC) Compounds and Chlorinated Poly (Vinyl Chloride) (CPVC) Compounds.
n. D2241, Standard Specification for Poly (Vinyl Chloride) (PVC) Pressure-Rated Pipe (SDR Series).
o. D2412, Standard Test Method for Determination of External Loading Characteristics of Plastic Pipe by Parallel-Plate Loading.
p. D3034, Standard Specification for Type PSM Poly (Vinyl Chloride) (PVC) Sewer Pipe and Fittings.
q. D3212, Standard Specification for Joints for Drain and Sewer Plastic Pipes Using Flexible Elastomeric Seals.
r. E329, Standard Specification for Agencies Engaged in the Testing and/or Inspection of Materials Used in Construction.
s. F477, Standard Specification for Elastomeric Seals (Gaskets) for Joining Plastic Pipe.
t. F679, Standard Specification for Poly (Vinyl Chloride) (PVC) Large-Diameter Plastic Gravity Sewer Pipe and Fittings.

1.02 DEFINITIONS

A. CCTV: Closed Circuit Television.

B. SDR: Standard Dimension Ratio.

PART 2 PRODUCTS

2.01 POLYVINYL CHLORIDE PIPE (PVC)

A. 15-Inch Diameter and Smaller; less than 15 foot deep:

1. In accordance with ASTM D3034.
2. Joints: Integral bell and spigot, in accordance with ASTM D3212.
3. Minimum SDR: 26.
4. Cell Classification: 12454-B or 12454-C, as defined by ASTM D1784.
5. Fittings: SDR 26 minimum wall thickness.
6. Gaskets: Factory fabricated rubber compression type with solid cross section in accordance with ASTM F477. Lubricant for joining pipe as approved by pipe manufacturer.

B. 18-Inch Through 36-Inch Diameter; less than 15 foot deep:

1. In accordance with ASTM F679.
2. Joints: Integral bell and spigot, in accordance with ASTM D3212.
3. Minimum Pipe Stiffness: 46 psi when tested in accordance with ASTM D2412.
4. Cell Classification: Minimum 12454-C, as defined by ASTM D1784.

5. Fittings: Wall thickness no less than wall thickness of equivalent size of pipe.
6. Gaskets: Factory fabricated rubber compression type with solid cross section conforming to ASTM F477.

2.02 DUCTILE IRON PIPE (DIP)

A. Pipe, greater than 15 foot deep:

1. Conform to ASTM A746.
2. Pressure class 250 minimum for pipe diameters 24-inches and smaller.
3. Joints: Push-on with rubber gaskets conforming to AWWA C111. Lubricant for joining pipe as approved by pipe manufacturer.
4. Fittings: Ductile iron conforming to AWWA C110 lined and coated same as pipe.
5. Pipe and fittings for sanitary sewer and wastewater applications shall be lined internally with a flexible lining and shall be:
   a. Protecto 401 Ceramic Epoxy as manufactured by Vulcan Painters, Inc. of Birmingham, AL, thickness according to manufacturer's standard, without exception.

B. Polyethylene Wrap and Tape for Ductile Iron Pipe:

1. Polyethylene Wrap: 8 mils, minimum thickness, conforming to AWWA C105.
2. Adhesive Tape: Thermoplastic pressure sensitive; minimum thickness of 8 mils; minimum width of 1 inch.

2.03 ALTERNATE MATERIALS

A. Other materials may be approved by CH2M HILL on a case by case basis. These materials include, but are not limited to, reinforced concrete, pipe, clay pipe, and HDPE piping.

2.04 SERVICE CONNECTION PIPE AND FITTINGS

A. Acceptable Pipe Materials: Polyvinyl chloride.

B. Use one type of service connection pipe material throughout, no interchanging of pipe and fittings allowed. Two (2) 45 degree bends shall be used for changes in direction, unless approved otherwise by CH2M HILL.

C. Size shall be as indicated below:

1. Residential Service: 6 inches.

2. Commercial Service, Including Motels and Apartments: 6 inches minimum.

D. Mark new service connections with markers of 2 by 4 lumber construction grade or better.

2.05 PIPE FOR WATERLINE CROSSINGS

A. PVC pressure pipe conforming to AWWA C900 or ASTM D2241; SDR 26, maximum.

B. Ductile iron pipe conforming to AWWA C151.

2.06 PIPE TO MANHOLE CONNECTOR

A. Manufacturers and Products:

1. Uniseal, Evansville, Indiana; Pipeconx, Universal Pipe Connector.
2. NPC Inc., Milford, NH; Kor-N-Seal.

2.07 FLEXIBLE COMPRESSION COLLAR

A. Mechanical joint coupling with No. 305 stainless steel bands.

B. Manufacturers:

1. Calder, Inc., Bellflower, CA.
2. Fernco Inc., Davison, MI.

2.08 CONCRETE

A. As specified in Section 03300, Cast-In-Place Concrete.

PART 3 EXECUTION

3.01 EXAMINATION

A. Notify CH2M HILL immediately of manufacturing imperfections or damage caused by improper handling.

B. Verify size, pipe condition, and pipe class prior to installation of pipe.

3.02 PREPARATION

A. Inspect pipe and fittings prior to lowering into trench to ensure no cracked, broken, or otherwise defective materials are being used.

B. Remove foreign matter and dirt from inside of pipe and fittings and keep clean during and after laying. Wash ends of section clean with wet brush prior to joining sections of pipe.

3.03 INSTALLATION

A. General:

1. Install pipe sections in accordance with manufacturer's recommendations.
2. Provide and use proper implements, tools, and facilities for safe and proper prosecution of Work.
3. Lower pipe, fittings, and appurtenances into trench, piece by piece, by means of crane, slings, or other suitable tools and equipment, in such a manner as to prevent damage to pipe materials, protective coatings and linings. Do not drop or dump pipe into trenches.

B. Line and Grade:

1. Establish line and grade for pipe by use of lasers.
2. Measure for grade at pipe invert, not at top of pipe.
3. Do not deviate from line or grade, as shown on Drawings, more than 1/2 inch, provided that such variation does not result in a level or reverse sloping invert.

C. Laying and Jointing:

1. Use gasket lubricant as recommended by gasket manufacturer.
2. Lay pipe upgrade with bell ends pointing in direction of laying.
3. When field cutting or machining pipe is necessary, use only tools and methods recommended by pipe manufacturer and approved by CH2M HILL.
4. After section of pipe has been placed in its approximate position for jointing, clean end of pipe to be joined, inside of joint, and rubber ring immediately before joining pipe.
5. Assemble joint in accordance with recommendations of manufacturer.
6. Apply sufficient pressure in making joint to assure that joint is "home" as defined in standard installation instructions provided by pipe manufacturer. Inside joint space shall not exceed 50 percent of pipe manufacturer's recommended maximum allowance.
7. Place pipe to specified line and grade to form smooth flow line.
8. Ensure that bottom of pipe is in contact with bottom of trench for full length of each section.
9. Check for alignment and grade after joint has been made.
10. Place sufficient pipe bedding material to secure pipe from movement before next joint is installed.

11. When pipe is laid within movable trench shield, take precautions to prevent pipe joints from pulling apart when moving shield ahead.
12. When laying operations are not in progress, and at close of day's work close and block open end of last laid section of pipe to prevent entry of foreign material or creep of gasketed joints.
13. Take precautions to prevent "uplift" or floating of line prior to completion of backfill operation.
14. Connections between one pipe material and another shall be by means of flexible compression collar, installed in accordance with the manufacture's recommendations, or concrete closure collar.

D. Gasketed Joint Protection:

1. Point (fill with joint cement mortar) 360 degrees of circumference. Quick setting grout may be substituted for joint cement mortar when approved by CH2M HILL.
   a. Thoroughly clean joint of lubricant materials and dirt.
   b. Prewet joint before applying mortar.
   c. Pointing shall be done in such a manner that there are no bulges, ridges, or other irregularities.
   d. Pointing shall be flush with interior of pipe.
   e. Do not point joints closer than three pipe joints from next pipe section to be placed.
   f. Pointing Mortar:
      1) 1 part cement to 1.5 parts sand, unless otherwise approved by CH2M HILL.
      2) Plastic and of such consistency that it will readily adhere to pipe.

E. Connection to Structure or Manhole:

1. Locate standard pipe joint within 1.5 feet of outside face of structure for pipe 18 inches and smaller and within one pipe diameter for pipe 21 inches and larger.
2. Plug or close off pipe stubbed with watertight plug.
3. Connect PVC pipe to manhole with pipe to manhole connector in accordance with manufacturer's recommendations.

F. Crossing Waterlines: Where sewer crosses less than 18 inches below waterline, use ductile iron or PVC pressure pipe for crossing or encase in concrete envelope for a minimum distance of 9 feet on each side of waterline.

G. Ductile Iron Pipe:

1. Cutting and Dressing of Ductile Iron Pipe Ends:

a. Cut at right angles to centerline of pipe to leave smooth end, without damage to pipe.
b. Use only approved mechanical cutter.
c. Taper cut end of pipe to be used with rubber gasket joints by grinding or filing 1/8 inch back at an angle of approximately 30 degrees with centerline of pipe.
d. Remove sharp or rough edges.
e. Abrade cut ends with grinding wheel and apply lining repair material. Use only compatible repair materials provided by pipe lining manufacturer. Allow repair lining to harden and cure before installation.

2. Polyethylene Wrap:
   a. Before installing wrap, clean pipe exterior of foreign material.
   b. Cut wrap approximately 2 feet longer than pipe section.
   c. Overlap wrap approximately 1 foot; seal joints with adhesive tape.
   d. Tape entire circumference of pipe at 3-foot intervals along pipe.
   e. Repair rips, punctures, or other damage to polyethylene with adhesive tape.
   f. When fittings cannot be practically wrapped in a tube, use a flat sheet or split tube of polyethylene. Securely tape seams.

3.04 CONCRETE CLOSURE COLLAR

A. Use only when approved by CH2M HILL, and then only to make connections between dissimilar pipe or where standard rubber gasketed joints or flexible compression collars are impractical or unavailable.

B. Procedure:

1. Remove water from excavation; placement of concrete in standing water will not be allowed.
2. Wash pipe to remove loose material.
3. Wrap and securely fasten light gauge sheet metal or building felt around pipe joint to ensure that concrete does not enter line.
4. Wet nonmetallic pipe thoroughly prior to concrete placement.
5. Placement shall be monolithic for each collar.
6. Place to minimum 6 inch thickness around outside diameter of pipe.
7. Extend concrete minimum of 12 inches on each side of joint.
8. Cure concrete, after initial set, by covering with well moistened earth.

3.05 SERVICE CONNECTION TEES

A. Install as shown on Part D, Standard Drawings.

B. Install caps or plugs on tees.

C. Furnish tee outlets with gasketed type joint or approved adapter to join service connection pipe.

D. Concrete encase tees in trenches deeper than 12 feet. Do not encase joints at ends of tee fitting.

E. Service Connections:

1. Minimum Slope: 1/4 inch per foot.
2. Markers:
   a. Paint the top portion of the marker immediately after its installation with first-quality white, quick-drying enamel.
   b. If marker is broken or knocked out of vertical alignment during backfilling operation, reopen trench and place marker in accordance with Sewer Service Connection Details shown on Drawings.
3. Disconnecting and Reconnecting Existing Service Connections:
   a. Locate the existing service connections prior to constructing the tee in the new sewerline.
   b. Disconnect existing service connections from existing sewers to be abandoned and reconnect them to the new sewers.

3.06 SERVICE CONNECTION INSTALLATION

A. In general, service connections shall extend to the sewer line, or as directed by CH2M HILL.

B. Minimum Slope: 1/4 inch per foot.

C. Minimum Trench Depth: 3 feet of cover building foundation.

D. Laying and Jointing of Service Connection Pipe and Fittings:

1. Maximum deflection permissible with any one fitting shall not exceed 45 degrees and shall be accomplished with long-radius curves or bends. Short-radius elbows or curves will not be permitted, except by permission of CH2M HILL.
2. Make service connection to sewer system at manhole when directed by CH2M HILL. Where service connection pipe is connected to manhole or concrete structure, make connection so standard pipe joint is located not more than 1.5 feet from structure.
3. Provide end of service connection line and fittings with standard watertight plug, cap, and stopper, suitably braced to prevent blow-off during hydrostatic or air testing.

E. First length of pipe out from tee on lateral or main shall not be greater than 3 feet in length.

F. Line and Grade for Service Connection Pipe and Fittings:

1. Install sewer tee so as to locate connection pipe within horizontal distance of 1 foot either side of staked location.
2. Lay pipe uniformly between tee or top of riser section and end of service connection. Where minimum slopes are used, lay pipe by means of good quality builder's level not less than 24 inches long.

G. Service Connection Marker:

1. Place at end of service connection.
2. If marker is broken or knocked out of vertical alignment during backfilling operation, reopen trench and replace marker.

H. Existing Service Connections:

1. Locate prior to constructing tee in new sewer pipeline.
2. Disconnect from existing pipelines to be abandoned and reconnect them to new sewer pipeline.

3.07 CLEANING

A. Clean each section of completed sewer pipeline prior to testing.

B. Place screen or dam in downstream manhole of section being cleaned to catch debris.

C. Remove material from each manhole section before cleaning the next section downstream.

D. Method: High velocity hydro-cleaning equipment.

E. Cleaning water may be discharged into existing sewer system after screening and removal of debris.

3.08 HYDROSTATIC AND PNEUMATIC TESTS

A. General:

1. Notify CH2M HILL in writing 5 days in advance of testing. Perform testing in presence of CH2M HILL.
2. Pipe 18 inches in diameter and smaller shall be tested for leakage using Hydrostatic Exfiltration or Pneumatic Test Methods at Contractor's option.

3. Pipe over 18 inches in diameter shall be tested for leakage using Hydrostatic Exfiltration Test Method.
4. Individual joints may be tested on pipe 36 inches in diameter and larger at Contractor's option.
5. Pipe shall successfully pass leakage test prior to acceptance
6. Test sections of constructed sewer between stations only after service connections, manholes, and backfilling are completed. Testing may be done prior to placement of asphaltic concrete or roadway structural section.
7. Isolate new pipelines that are connected to existing pipelines. Install pipe plugs as required to allow section of new pipe to be pressure tested.
8. Plug wyes, tees, stubs, and service connections with gasketed caps or plugs securely fastened or blocked to withstand internal test pressure. Such plugs or caps shall be removable, and their removal shall provide socket suitable for making flexible jointed lateral connection or extension.
9. Furnish testing equipment and perform tests as approved by CH2M HILL. Testing equipment shall provide observable and accurate measurement of leakage under specified conditions.
10. Supply of temporary water shall be as stated in Section 02519, Disinfection of Water Systems, unless otherwise approved by the Owner.
11. Contractor may, if field conditions permit and as determined by CH2M HILL, partially backfill trench and leave joints open for inspection and conduct an initial service leak test. Hydrostatic acceptance test shall not be conducted until backfilling has been completed.
12. Test sections of constructed sewer between stations only after service connections, manholes, and backfilling are completed. Testing may be done prior to placement of asphaltic concrete or roadway structural section.

B. Hydrostatic Exfiltration Test:

1. Fill pipe test section 24 hours prior to time of testing, if desired, to permit normal absorption into pipe walls.
2. Procedure:
   a. Maximum filling velocity shall not exceed 0.25 foot per second, calculated based on full area of pipe.
   b. Expel air from piping system during filling.
   c. Apply and maintain specified test pressure with hydraulic force pump. Valve off piping system when test pressure is reached.
   d. Maintain hydrostatic test pressure continuously for 2 hours minimum, adding additional make-up water only as necessary to restore test pressure.

e. Determine actual leakage by measuring quantity of water necessary to maintain specified test pressure for duration of test.

3. Measurement Accuracy: Plus or minus 1/8 gallon of water leakage under specified conditions
4. PVC and ductile iron pipe and joints shall sustain maximum water loss limit of 0.8 gallon per inch diameter per 1,000 feet of pipe, including service connections within test section per 2 hours. Allowable leakage shall be modified as stated below if hydrostatic head is other than 6 feet.
5. Hydrostatic Head:
   a. At least 6 feet above maximum estimated groundwater level in section being tested, but no less than 6 feet above inside top of highest section of pipe in test section, including service connections.
   b. In every case, determine height of water table at time of test by exploratory holes or such other methods approved by CH2M HILL. CH2M HILL will make final decision regarding test height for water in pipe section being tested.
   c. If hydrostatic head is other than 6 feet, allowable leakage as computed by criteria above shall be adjusted by the square root of actual head divided by square root of 6.
6. Length of Pipe Tested: Limit length such that pressure on invert of lower end of section does not exceed 16 feet of water column. In no case shall length be greater than 700 feet or distance between manholes when greater than 700 feet.
7. Dispose of test water in a manner that will not damage or interfere with adjacent property and in a manner acceptable with DPW and regulatory agencies.

C. Pneumatic Testing for 18-inch and Smaller Diameter Pipe:

1. Equipment:
   a. Calibrate gauges with standardized test gauge provided by Contractor at start of each testing day. CH2M HILL will witness calibration.
   b. Install compressor, air piping manifolds, gauges, and valves at ground surface.
   c. Provide pressure release device, such as rupture disc or pressure relief valve, to relieve pressure at 6 psi or less.
   d. Restrain plugs used to close sewer lines to prevent blowoff.
2. Procedure:
   a. No person shall enter manhole or structure, or occupy area above opening of manhole or structure where pipe is under pressure.
   b. Determine height of groundwater table at time of test.

c. Slowly introduce air into pipe section until internal air pressure reaches 4 psi greater than average backpressure of groundwater submerging pipe.

d. Allow 2 minutes minimum for air temperature to stabilize.

e. Allowable leakage for sewers constructed of air-permeable materials, such a concrete or clay:

1) When pressure is decreased to 3.5 psig, air pressure test shall begin.

2) Test shall consist of measuring time in seconds for pressure in pipe to drop from 3.5 psig to 2.5 psig.

3) Pipe leakage shall be considered acceptable if time in seconds for pressure drop is equal to or greater than required time as calculated below:

$K = 0.0111d^2L$
$C = 0.000392dL$

If C_t is less than or equal to 1.0, then time = K_t
If C_t is between 1.0 and 1.75, then time = K_t/C_t
If C_t is greater than or equal to 1.75, then time = $K_t/1.75$

Where: d = pipe diameter in inches
L = pipe length in feet
K = value for each length of pipe of a specific diameter
C = value for each length of pipe of a specific diameter
K_t = Sum of all K values
C_t = Sum of all C values

4) Table 1 shows test times for pipe from 4 to 24 inches in diameter.

TABLE 1*

A Pipe Diameter (Inches)	B Time per Foot up to Length in Col C (Seconds)	C Test Length (Feet)	D Test Time for any Length Between Col C & E (Min:Sec)	E Length at Which Time in Col F Applies (Feet)	F Time per Foot for Total Length (Seconds)
4	0.18	636	1:54	1,114	0.10
6	0.40	424	2:50	743	0.23
8	0.71	318	3:47	557	0.41
10	1.11	255	4:43	446	0.63
12	1.60	212	5:40	371	0.91
15	2.50	170	7:05	297	1.42
18	3.62	141	8:30	248	2.06
21	4.92	121	9:55	212	2.81

TABLE 1*					
A	**B**	**C**	**D**	**E**	**F**
Pipe Diameter (Inches)	**Time per Foot up to Length in Col C (Seconds)**	**Test Length (Feet)**	**Test Time for any Length Between Col C & E (Min:Sec)**	**Length at Which Time in Col F Applies (Feet)**	**Time per Foot for Total Length (Seconds)**
24	6.42	106	11:20	187	3.67
EXAMPLE: 15-inch diameter pipe: For 150 feet, T = 2.50 sec (Col B) x 150 ft = 375 sec = 6:15 For 250 feet, T = 7:05 (Col D) For 500 feet, T = 1.42 sec (Col F) x 500 ft = 710 sec = 11:50					
*Based on 0.003 cfm per square foot with a minimum significant loss of 2 cfm and a maximum loss of 3.5 cfm.					

f. Piping with groundwater infiltration rate greater than allowable leakage rate for exfiltration will be considered defective even if pipe previously passed a pressure test.

g. Allowable leakage for sewers constructed of nonair-permeable materials such as ductile iron, and polyvinyl chloride (PVC).

1) When nonair-permeable pipe is subjected to low pressure air test, time in seconds for pressure drop shall be equal to or greater than three times required time calculated using procedure above.

2) Defective Piping Sections: Replace or test and seal individual joints and retest as specified.

D. Hydrostatic Joint Testing:

1. If pipe fails to pass hydrostatic test and location of leak cannot be readily identified, individual joint tests shall be performed. After leaking joints have been located and repaired, retest pipeline. As alternative to filling entire pipe and measuring leakage, test each individual joint for leakage.
2. Testing shall be performed prior to installing PVC liner patch at joints.
3. Provide device specifically designed for testing of pipe joints and consisting of a metal cylinder, seal ring on each side of joint, and method of applying pressure to joint.
   a. Manufacturer:
      1) Mechanical Research and Design, Inc., Manitowoc, WI.
      2) Cherne Industries, Inc., Minneapolis, MN.
4. Measurement Accuracy: Plus or minus 0.05 gallon of water leakage under specified conditions.
5. Determine height of groundwater table at time of test.

6. Minimum Pressure, Each Joint: 2.5 psi above backpressure of groundwater.
7. Minimum Test Duration, Each Joint:
   a. 20 minutes for 60-inch diameter pipe and smaller.
   b. 10 minutes for pipe larger than 60-inch diameter.
8. Maximum Leakage: Leakage per joint shall not exceed maximum water loss limit of 0.0008 gallon per hour per inch-diameter times length of distance between pipe joints.

E. Test Report Documentation:

1. Test date.
2. Pipe section or pipe joint tested.
3. Test Method.
4. Test Pressure.
5. Length of test.
6. Pressure or water loss.
7. Remarks, including:
   a. Leaks (type, location).
   b. Repair/ replacement performed to remedy excessive leakage.
8. Signed by Contractor and CH2M HILL to represent that test has been satisfactorily completed.

F. Subsequent Failure: Visible infiltration of groundwater following successful test shall be considered evidence that original test was in error or that subsequent failure of pipeline has occurred.

G. PVC Pipe Deflection Test:

1. General:
   a. Test installed pipeline for deflection by pulling a mandrel through sewer without aid of mechanical pulling device.
   b. Perform test at least 30 days after trench backfill and compaction have been completed.
   c. No pipe shall exceed a deflection of 5 percent.
2. Mandrel:
   a. Full circle, solid or rigid odd number of legs (minimum 9 legs) steel cylinder with pulling rings at each end.
   b. Diameter: Sized to allow only as much initial deflection for ultimate deflection of 5 percent.
   c. Obtain CH2M HILL approval for use of mandrel smaller than 96-2/3 percent of inside diameter of pipe.
3. Correcting Deficiencies or Obstructions:
   a. Excavate to springline of pipeline and replace and recompact pipe zone material.
   b. Internal pipe rerounding or vibration will not be allowed.

c. If pipe does not pass mandrel test after replacement of pipe zone material and trench backfill, re-excavate and replace pipeline.

END OF SECTION

GRAVITY SEWER PIPE AND FITTINGS TEST REPORT

Date: _____

Pipe Section or Joint Tested: _____

Test Method: ☐ Hydrostatic Exfiltration ☐ Pneumatic ☐ Hydrostatic Joint

Test Pressure: _____

Length of Test: _____

Pressure or Water Loss: _____

Leaks Noted:

_____

_____

_____

_____

Repair/Replacement Performed to Remedy Excessive Leakage:

_____

_____

_____

_____

_____

Customer Signature	CH2MHILL Site Engineer Signature
Customer Name	CH2MHILL Site Engineer Name

HYDROSTATIC LEAK TEST RECORD
FOR BURIED WATER & WASTEWATER PRESSURE PIPING
(See Specification for procedures to use with other types of pipe.)

DATE OF TEST: _____

TEST NO: _____

RETEST: YES ☐ NO ☐

PROJECT: _____ PROJECT NO: _____

CONTRACTOR: _____ INSPECTOR: _____
(Print)

Pipeline Identification: _____

Location of Test: _____

Test From: _____ (Sta) To: _____ (Sta) Test Fluid: _____

Test Specification: _____

Allowable Leakage (L) Test Computation

$$L = \frac{SD(P)^{1/2}}{133{,}200}$$

Length of Pipe to Be Tested (S): _____ Feet

Nominal Diameter Of Pipe (D): _____ Inches

Average Test Pressure (P): _____ Psi

$$L = \frac{SD(P)^{1/2}}{133{,}200} = (S)\ ____\ \times (D)\ \frac{_____}{133{,}200} \times (P)^{1/2}\ ____\ = (L)\ ____\ \text{Gph}$$

Test Start Time: _____ Test End Time: _____

Test Duration (T): _____ Hours

Total Allowable Loss = (L) _____ X (T) _____ = _____ Gallons

Fluid Required To Maintain Test Pressure: _____ Gallons

Test: Pass _____ Fail _____

Remarks:

Contractor Certification:

_____
Signature

_____
Title

CH2M HILL Representative:

_____
Signature

_____
Title

Distribution
(1) Engineer
(2) Contractor
(3) CH2M HILL

HYDROSTATIC/PNEUMATIC LEAK TEST RECORD (FOR EXPOSED PRESSURE PIPING)

DATE OF TEST: _____

TEST NO: _____

RETEST: YES ☐ NO ☐

PROJECT: _____ PROJECT NO: _____

CONTRACTOR: _____ INSPECTOR: _____
(PRINT)

Pipeline Identification: _____

Location Of Test: _____

Test Specification: _____

Type of Test:
- ☐ Visual Examination
- ☐ Pneumatic/Vacuum
- ☐ Initial Service

Allowable Leakage: _____

Test Pressure: _____ psi

Test Start Time: _____ Test Finish Time: _____

Test Duration: _____ hours

Test: Pass _____ Fail _____

Remarks:

Contractor Certification:

_____
Signature

_____
Title

CH2M HILL Representative:

_____
Signature

_____
Title

Distribution
(1) Engineer
(2) Contractor
(3) CH2M HILL

SECTION 02518
WATER SERVICE CONNECTIONS

PART 1 GENERAL

1.01 REFERENCES

A. The following is a list of standards which may be referenced in this section:

1. American Water Works Association (AWWA): C800, Underground Service Line Valves and Fittings.
2. ASTM International (ASTM):
   a. A120, Pipe, Steel, Black and Hot-Dipped Zinc-Coated (Galvanized) Welded and Seamless for Ordinary Uses.
   b. B32, Standard Specification for Solder Metal.
   c. B88, Standard Specification for Seamless Copper Water Tube.
   d. D1784, Standard Specification for Rigid Poly Vinyl Chloride (PVC) compounds and chlorinated Poly Vinyl Chloride (CPVC) compounds.
   e. D2672, Standard Specification for Joints for IPS PVC Pipe using Solvent Cement.
   f. D2855, Standard Practice for Making Solvent-Cemented Joints with Poly (Vinyl Chloride) (PVC) Pipe Fittings.
3. Federal Specification (FS):
   a. WW-P-406, Pipe, Steel (Seamless and Welded)(For Ordinary Use).
   b. WW-V-54D, Valve, Gauge, Bronze (125, 150, and 200 pound, Screwed Flanged, Soldered End, for Land Use).
4. BOCA National Plumbing Code

PART 2 PRODUCTS

2.01 SERVICE CONNECTION

A. Water taps and service lines shall be only of the following sizes: 3/4”, 1”, 1-1/2”, and 2”.

B. Furnish components same size as nominal designation of service pipe. For example, ¾-inch connection consists of:

1. 3/4-inch corporation stop,
2. 3/4-inch curb stop, or
3. 3/4-inch angle valve.
4. 3/4-inch meter couplings.

2.02 SERVICE SADDLES

Mainline Material	Characteristics	Manufacturer
Concrete Cylinder Pipe 12 to 18 inches 18 to 42 inches	Ductile iron double- or triple-strap saddle with iron pipe tap; neoprene O-ring seal; electrogalvanized straps; ¾-inch IP tap	Smith-Blair Type 362 Type 366
Asbestos Cement Class 150 Main 4 to 10 inches 12 to 18 inches	Single- or double-strap saddle; AWWA C800 tap; electrogalvanized straps	Smith-Blair Type 311 Type 313
Asbestos Cement Class 200 Main	Double-strap saddle; AWWA C800 tap; electrogalvanized straps	Smith-Blair Type 331
PVC Main	Nylon-coated saddles; AWWA C800 tap; stainless steel strap	Smith-Blair Type 315
Cast Iron Pressure Pipe	Double-strap; Mueller tap; neoprene gaskets	Smith-Blair Type 313

2.03 REPAIR SERVICE CLAMPS

A. Size: Adequate for pipe on which installed.

B. Characteristics:

1. IP threads.
2. Clamps for 1-1/4-inch and Larger Service:
   a. Double-strap, malleable iron body.
   b. Zinc-plated.
   c. Neoprene gaskets cemented in place.

C. Manufacturers:

1. Smith-Blair.
2. Mueller Co.

2.04 CORPORATION STOPS

Service Size	Characteristics	Manufacturer & Model
3/4 inch through 1 inch	AWWA C800 thread inlet; compression connection for copper pipe outlet	Mueller: H-15008

Service Size	Characteristics	Manufacturer & Model
1 to 2 inches	AWWA C800 thread inlet; compression connection for copper pipe outlet	Mueller: H-15025 or Hays: 5204
1-1/2 to 2 inches	AWWA C800 thread inlet; female iron pipe thread for PVC outlet	Mueller: H-10045

2.05 COUPLINGS

A. All copper couplings shall be compression fittings.

B. All PVC couplings shall be threaded and/or solvent welded.

2.06 UNIONS

A. Characteristics: Copper-to-copper union.

B. Manufacturers:

1. Mueller Co.; Model H-15403.

2.07 CURB STOPS

Service Size	Characteristics	Manufacturer & Model
1-1/2 inches and larger	PVC Service Iron pipe inlet and outlet connections	Mueller: B20283
3/4”, 1”, 1-1/2”,2”	Copper service	Mueller: B25209

2.08 CURB BOXES

A. Characteristics:

1. Furnish with lids and plugs.
2. 4 feet long, extension type.
3. Arch pattern base.

B. Manufacturers: Mueller Co.; Model H-10310 for 1-1/2” and 2”; Model H-10306 for 1” and smaller.

2.09 METER STOP

Service Size	Characteristics	Manufacturer & Model
3/4”-1”	Copper Service	Mueller: B24273
1-1/2”, 2”	Copper Service	Mueller: B24335
1-1/2”,2”	PVC service	Mueller: B24337

2.10 METER BOXES, VAULTS, AND COVERS

Service Size	Characteristics	Manufacturer & Model
3/4 inch, or 1 inch	Concrete cover; cast iron reading lid	Brooks Products, Inc.: Model 4
1-1/2 inches or 2 inches	Concrete cover; cast iron reading lid	Brooks Products, Inc.: No. 65-S

2.11 METER YOKES

Service Size	Characteristics	Manufacturer & Model
3/4 inch, or 1 inch	Iron Meter Yoke	Mueller: H5030 or H5040

2.12 METERS

Service Size	Characteristics	Manufacturer & Model
3/4 inch, 1 inch, 1-1/2 inch, or 2 inch	Positive displacement, magnetic drive, Hersey Hot Rod Radio Transmitter Unit Equipped.	Hersey: Series 400 or 500

2.13 COPPER TUBING

A. Size: 3/4-inch to 2-inch service connections.

B. Characteristics:

1. Type K, soft, seamless.

2. Conform to ASTM B88.
3. Commercially pure wrought copper solder joint fittings.
4. Joints:
   a. 95-5 coreless wire solder.
   b. Conform to ASTM B32, Grade 95 TA.

2.14 PVC PIPE

A. Size 1.5-inch and larger service connections, iron pipe size (IPS).

B. Characteristics

1. Schedule 80, Type I, Grade I PVC with a cell classification of 12454
2. Conform to D1784
3. NSF approved for potable water
4. Joints
   a. Threaded IPS
   b. Solvent welded
   c. Rubber gasketed

PART 3 EXECUTION

3.01 GENERAL

A. Install service connections, excluding meters, during or after construction of the main.

B. Install water meters after entire water system is ready for operation.

C. Depth of cover over the pipe shall be minimum 36 inches.

3.02 CONNECTION TO MAIN

A. Clean exterior of main of dirt and other foreign matter that may impair the quality of the completed connection.

B. Place service clamp at desired location.

C. Clamp by tightening alternate nuts progressively.

D. Do not place service clamp within 1 foot of pipe joint, or another clamp.

E. Make taps with adapters for the size main being tapped.

3.03 UNDERCROSSING OF HARD SURFACE ROADS

A. Bore or jack undercrossings.

B. Do not open-cut asphalt or concrete roads.

3.04 COPPER TUBING

A. Cut square ends, ream clean, and make up tightly.

B. Prevent the tube from kinking or buckling on short radius bends. If tube should kink or buckle, cut out kinked or buckled sections and splice with brass fitting.

3.05 PVC PIPE

A. In accordance with AWWA C605

B. Solvent cement used for joints as recommended by pipe manufacturer.

C. Joints:

1. Rubber Gasketed: In accordance with manufacturer's written instructions.
2. Solvent Cemented: In accordance with ASTM D2855.

D. Pipe Bending for Horizontal or Vertical Curves:

1. Radius of curves shall not exceed 75 percent of manufacturer's recommended values.
2. Use blocks or braces at pipe joints to ensure axial deflection in gasketed or mechanical joints does not exceed allowable deflection.

3.06 METER BOXES AND METERS

A. Installation:

1. Construct enclosures plumb, and flush with existing ground surface unless shown otherwise.
2. Use standard extension sections to adjust to grade.
3. Place lightly compacted earth backfill inside meter box to depth shown.
4. Backfill around meter vaults as specified in Section 02320, Trench Backfill.
5. Install meter in horizontal position with dial at required depth below cover.

6. Corporation Stops: OPEN position.
7. Angle Stops: CLOSED position.

3.07 TESTING

A. Inspect service connections for leakage under normal system pressure. Joints shall be watertight before acceptance.

B. Test Duration: At least 15 minutes.

C. Inspect for leaks and repair before backfilling.

3.08 DISINFECTION OF SERVICE CONNECTIONS

A. Flush new tubing before connecting to existing tubing or meter stop, by opening corporation stop, allowing water to run for 2 minutes.

B. Extra chlorine will be put into the system by CH2M HILL during service connection transfers to provide adequate disinfection capacity when above procedures are executed.

END OF SECTION

SECTION 02519
DISINFECTION OF WATER SYSTEMS

PART 1 GENERAL

1.01 REFERENCES

A. The following is a list of standards which may be referenced in this section:

1. American Water Works Association (AWWA):
   a. B300, Hypochlorites.
   b. B301, Liquid Chlorine.
   c. B302, Ammonium Sulfate
   d. B303, Sodium Chlorite.
   e. C651, Disinfecting Water Mains.
   f. C652, Disinfection of Water Storage Facilities.
   g. C653, Disinfection of Water Treatment Plants.
   h. C654, Disinfection of Wells.
2. Standard Methods for the Examination of Water and Wastewater, as published by American Public Health Association, American Water Works Association, and the Water Environment Federation.

PART 2 PRODUCTS

2.01 WATER FOR DISINFECTION AND TESTING

A. Clean, uncontaminated, and potable.

B. CH2M HILL shall make arrangements for water supply, and Contractor shall convey water in disinfected pipelines or containers.

2.02 CONTRACTOR'S EQUIPMENT

A. Furnish chemicals and equipment, such as pumps and hoses, to accomplish disinfection.

B. Water used to fill pipeline may be supplied using a temporary connection to existing distribution system. Provide protection against cross-connections as required by AWWA C651.

PART 3 EXECUTION

3.01 GENERAL

A. Conform to AWWA C651 for pipes and pipelines, except as modified in these Specifications.

B. Disinfect the following items installed or modified under this Project, intended to hold, transport, or otherwise contact potable water:

1. Pipelines: Disinfect new pipelines that connect to existing pipelines up to point of connection.
2. Disinfect surfaces of materials that will contact finished water, both during and following construction, using one of the methods described in AWWA C652 and C653. Disinfect prior to contact with finished water. Take care to avoid recontamination following disinfection.

C. Prior to application of disinfectants, clean pipelines of loose and suspended material.

D. Allow freshwater and disinfectant solution to flow into pipe or vessel at a measured rate so chlorine-water solution is at specified strength. Do not place concentrated liquid commercial disinfectant in pipeline or other facilities to be disinfected before it is filled with water.

3.02 SEQUENCING AND SCHEDULING

A. Commence initial disinfection after completion of following: Hydrostatic and pneumatic testing, pressure testing, functional and performance testing and acceptance of pipelines, pumping systems, structures, and equipment.

3.03 PIPING AND PIPELINES

A. Cleaning:

1. Before disinfecting, clean all foreign matter from pipe in accordance with AWWA C651.
2. If the continuous feed method or the slug method of disinfection, as described in AWWA C651 are used, flush pipelines with potable water until clear of suspended solids and color. Provide hoses, temporary pipes, ditches, and other conduits as needed to dispose of flushing water without damage to adjacent properties.
3. Flush service connections and hydrants. Flush distribution lines prior to flushing hydrants and service connections. Operate valves during flushing process at least twice during each flush.
4. Flush pipe through flushing branches and remove branches after flushing is completed.

B. Disinfecting Procedure: In accordance with AWWA C651, unless herein modified.

3.04 DISPOSAL OF HEAVILY CHLORINATED WATER

A. Do not allow flow into a waterway without neutralizing disinfectant residual.

B. See the appendix of AWWA C651 for acceptable neutralization methods.

3.05 TESTING

A. Collection of Samples:

1. Coordinate activities to allow Samples to be taken in accordance with this Specification.
2. Provide valves at sampling points.
3. Provide access to sampling points.

B. Test Equipment:

1. Clean containers and equipment used in sampling and make sure they are free of contamination.
2. Obtain sampling bottles with instructions for handling from CH2M HILL's laboratory.

C. Chlorine Concentration Sampling and Analysis:

1. Collect and analyze Samples in accordance with AWWA Standards.
2. Sampling Locations: As determined by CH2M HILL.
3. Analysis to be performed by CH2M HILL's laboratory. Samples will be analyzed using method for free chlorine as described in latest edition of Standard Methods for Examination of Water and Wastewater.

END OF SECTION

SECTION 02533
MANHOLES

PART 1 GENERAL

1.01 REFERENCES

A. The following is a list of standards that may be referenced in this section:

1. ASTM International (ASTM):
   a. A36, Standard Specification for Carbon Structural Steel.
   b. A48, Standard Specification for Gray Iron Castings.
   c. A123, Standard Specification for Zinc (Hot-Dip Galvanized) Coatings on Iron and Steel Products.
   d. A167, Standard Specification for Stainless and Heat-Resisting Chromium-Nickel Steel Plate, Sheet, and Strip.
   e. A240, Standard Specification for Heat-Resisting Chromium and Chromium-Nickel Stainless Steel Plate, Sheet, and Strip for Pressure Vessels.
   f. A536, Standard Specification for Ductile Iron Castings.
   g. A615/A615M, Standard Specification for Rail-Steel Deformed and Plain Bars for Concrete Reinforcement.
   h. B139, Standard Specification for Phosphor Bronze Rod, Bar, and Shapes.
   i. C14, Standard Specification for Concrete Sewer, Storm Drain, and Culvert Pipe.
   j. C387, Standard Specification for Packaged, Dry, Combined Materials for Mortar and Concrete.
   k. C443, Standard Specification for Joints for Circular Concrete Sewer and Culvert Pipe, Using Rubber Gaskets.
   l. C478, Standard Specification for Precast Reinforced Concrete Manhole Sections.
   m. C923, Standard Specification for Resilient Connectors Between Reinforced Concrete Manhole Structures, Pipes, and Laterals.
   n. D4101, Standard Specification for Propylene Plastic Injection and Extrusion Materials.
   o. F593, Standard Specification for Stainless Steel Bolts, Hex Cap Screws, and Studs.
   p. F594, Standard Specification for Stainless Steel Nuts.

1.02 QUALITY ASSURANCE

A. Qualifications of Precasting Manufacturers:

1. Precast Concrete and Precast Prestressed Concrete: Product of manufacturer with 3 years' experience producing precast concrete products of quality specified.
2. Precast Plant: Plants shall be currently certified by the Precast/Prestressed Concrete Institute and the National Precast Concrete Association.
3. Calculations stamped by an engineer registered in the same state as the Project.

PART 2 PRODUCTS

2.01 PRECAST MANHOLES

A. Riser Sections:

1. Minimum 48 inches in diameter.
2. Fabricate in accordance with ASTM C478.
3. Minimum Wall Thickness: 4 inches or 1/12 times inside diameter, whichever is greater.
4. Top and bottom shall be parallel.
5. Joints: Tongue-and-groove or confined groove with mortar.

B. Cone Sections:

1. Provide eccentric cones.
2. Same wall thickness and reinforcement as riser section.
3. Top and bottom shall be parallel.

C. Base Sections and Base Slab:

1. Base Sections: Base slab integral with sidewalls.
2. Fabricate in accordance with ASTM C478.

D. Manhole Extensions:

1. Concrete grade rings; maximum 6 inches high.
2. Fabricate in accordance with ASTM C478.

E. Preformed Plastic Gaskets:

1. Hamilton Kent of Nevada, Sparks, NV; Kent-Seal No. 2.
2. Henry Company, Houston, TX; Ram-Nek.

F. Polypropylene Steps:

1. Fabricate from minimum 1/2 inch, Grade 60, steel bar meeting ASTM A615/A615M.
2. Polypropylene encasement shall conform to ASTM D4101.
3. Minimum Width: 13 inches, center-to-center of legs.
4. Embedment: 3-1/2-inch minimum and 4-1/2-inch minimum projection from face of concrete at point of embedment to center of step.
5. Cast in manhole sections by manufacturer.
6. Load Test: Capable of withstanding ASTM C478 vertical and horizontal load tests.

G. Source Quality Control:

1. All test specimens shall be mat tested and meet permeability test requirements of ASTM C14.
2. Conduct normal QA/QC tests at point of manufacture prior to delivery of any section. Results of these tests shall be provided to CH2M HILL prior to installation.
3. CH2M HILL shall be able to visit manufacturer's facility to witness manufacture of any structure and QA/QC process.

2.02 CAST-IN-PLACE MANHOLES

A. Concrete: Furnish as specified in Section 03300, Cast-in-Place Concrete.

2.03 MANHOLE FRAMES AND COVER

A. Castings:

1. Tough, close-grained gray iron, sound, smooth, clean, free from blisters, blowholes, shrinkage, cold shuts, and defects.
2. Cast Iron: ASTM A48 Class 30B.
3. Ductile Iron: ASTM A536, Grade 60-40-12.
4. Plane or grind bearing surfaces to ensure flat, true surfaces.

B. Cover: True and seat within ring at all points with the word SEWER in 2-inch raised letters.

2.04 WATERTIGHT FRAME FASTENERS

A. Galvanize after fabrication in conformance with ASTM A123.

2.05 MANHOLE FRAME TO STRUCTURE SEALS

A. Gasket:

1. Extrude or mold from a high-grade rubber compound.
2. Comply with material test requirements of ASTM C923.
3. Minimum Thickness: 3/16 inch.
4. Minimum Unstretched Length: Sufficient to extend from the manhole frame, across a maximum of 12 inches of extension rings, to the manhole cone section.
5. Fabricate bands for compressing sleeve against manhole from Type 304 stainless steel:
   a. Channeled Sheet: Minimum 16-gauge, ASTM A167.
   b. Round: 5/16-inch diameter, ASTM A240.

B. Screws, Bolts, or Nuts: Stainless steel conforming to ASTM F593 and ASTM 594, Type 304.

C. Internal gasket or its appurtenances shall not extend into the manhole opening to restrict entry into or exit from the manhole.

D. Gasket shall be made only of materials that have been proven to be resistant to the following exposures and conditions:

1. Sanitary sewage.
2. Corrosion or rotting under wet or dry conditions.
3. Gaseous environment in sanitary sewers and at road surfaces including common levels of ozone, carbon monoxide, and other trace gases at the sites of installation.
4. Biological environment in soils and sanitary sewers.
5. Chemical attack by road salts, road oil, and common street spillages or solvents used in street construction or maintenance.
6. Temperature ranges, variations, and gradients in the area of construction.
7. Variations in moisture conditions and humidity.
8. Fatigue failure caused by a minimum of 30 freeze-thaw cycles per year.
9. Vibrations due to traffic loading.
10. Fatigue failure due to repeated variations of tensile, compressive and shear stresses, and repeated elongation and compression.
11. Any combination of the above.

E. Materials used shall be compatible with each other and with manhole materials.

F. Design gasket to meet the following requirements:

1. Continuously prevent leakage of water from outside the manhole into the manhole at the joints between the manhole frame and the cone section.
2. Seal shall remain flexible, allowing repeated vertical movements of frame from 0 to 2 inches or repeated horizontal movements of frame with respect to top of extension or cone from 0 to 1/2 inch due to pavement movements or other causes, or both types of movement occurring simultaneously at rates not exceeding 1/10 inch per minute.

2.06 MORTAR

A. Standard premixed in accordance with ASTM C387, or proportion 1 part Portland cement to 2 parts clean, well-graded sand that will pass a 1/8-inch screen.

B. Admixtures: May be included but do not exceed the following percentages of weight of cement:

1. Hydrated Lime: 10 percent.
2. Diatomaceous Earth or Other Inert Material: 5 percent.

C. Mix Consistency:

1. Tongue-and-Groove Type Joint: Such that mortar will readily adhere to pipe.
2. Confined Groove (Keylock) Joint: Such that excess mortar will be forced out of groove and support is not provided for section being placed.

2.07 CLEANOUT FRAMES AND COVERS

A. Castings:

1. Tough, close-grained gray iron, sound, smooth, clean, free from blisters, blowholes, shrinkage, cold shuts, and defects.
2. Cast Iron: ASTM A48, Class 30B.
3. Ductile Iron: ASTM A536, Grade 65-40-12.
4. Plane or grind bearing surfaces to ensure flat, true surfaces.

B. Covers: True and seat within frame at all points.

2.08 IMPORTED PIPE BASE

A. Furnish as specified in Section 02320, Trench Backfill.

2.09 MANHOLE MARKER POSTS

A. Size and Type: 4 inches by 4 inches by 8 feet, S4S, cedar, pine, redwood, or fir, Construction Grade or better.

B. Prime top (exposed) 3 feet 8 inches, followed by two coats of safety orange enamel.

1. Primer: Tnemec; Series 36 Undercoater.
2. Enamel: Tnemec; Series 2H Tnemec Gloss.

C. Bottom (Buried) Portion:

1. Treat bottom 4 feet 4 inches with a solution consisting of 5 percent by weight of pentachlorophenol dissolved with a petroleum solvent.
2. At Contractor's option, entire post may be treated provided 30 days elapse prior to painting.

D. Lettering:

1. Stencil the letters "SANITARY MANHOLE" on all sides of each post.
2. Letters to be black enamel, 2 inches high.

2.10 FLEXIBLE JOINTS

A. Manufacturers:

1. "Kor-N-Seal" flexible rubber boot with stainless steel accessories as manufactured by NPC, Inc., Milford, New Hampshire.
2. "Z-LOK XP" or "A-LOK" flexible connectors as manufactured by A-LOK Products, Inc., Tullytown, PA.

PART 3 EXECUTION

3.01 GENERAL

A. Remove and keep all water clear from the excavation during construction and testing operations.

B. Place imported pipe base material on undisturbed earth; thoroughly compact with a mechanical vibrating or power tamper.

3.02 EXCAVATION AND BACKFILL

A. Backfill: As specified in Section 02320, Trench Backfill.

3.03 INSTALLATION OF PRECAST MANHOLES

A. Concrete Base:

1. Cast-in-Place:
   a. Vibrate to densify concrete and screed so first precast manhole section to be placed has a level, uniform bearing for full circumference.
   b. Deposit sufficient mortar on base to assure watertight seal between base and manhole wall, or place first precast section of manhole in concrete base before concrete has set. Properly locate and plumb first section.
2. Precast:
   a. Place on compacted imported base material.
   b. Properly locate, ensure firm bearing throughout, and plumb first section.

B. Sections:

1. Thoroughly clean ends of sections to be joined.
2. Thoroughly wet joint with water prior to placing mortar.
3. Locate precast steps in line with each other to provide a continuous vertical ladder.

C. Mortar Joints:

1. Place mortar on groove of lower section prior to section installation.
2. Fill joint completely with mortar of proper consistency.
3. Trowel interior and exterior surfaces smooth on standard tongue-and-groove joints.
4. Prevent mortar from drying out and cure by applying an approved curing compound or comparable approved method.
5. Do not use mortar mixed for longer than 30 minutes.
6. Chip out and replace cracked or defective mortar.
7. Completed Manholes: Rigid and watertight.

D. Preformed Plastic Gaskets (In lieu of mortar joints):

1. Carefully inspect precast manhole sections to be joined.
2. Do not use sections with chips or cracks in the tongue.
3. Use only pipe primer furnished by gasket manufacturer.
4. Install gasket material in accordance with manufacturer’s instructions.
5. Completed Manholes shall be rigid and watertight.

E. Rubber Gasketed Joints: Install in accordance with manufacturer’s instructions.

F. Extensions:

1. Provide on manholes in streets or other locations where a subsequent change in existing grade may be likely.
2. Install to height not exceeding 12 inches, limit a maximum of 2 extensions on a new manhole.
3. Lay grade rings in mortar with sides plumb and tops level.
4. Seal joints with mortar as specified for sections, and make watertight.

3.04 MANHOLE INVERT

A. Construct with smooth transitions to ensure an unobstructed flow through manhole. Remove sharp edges or rough sections that tend to obstruct flow.

B. Where full section of pipe is laid through manhole, break out top section and cover exposed edge of pipe completely with mortar. Trowel mortar surfaces smooth.

3.05 CAST-IN-PLACE MANHOLE

A. Concrete: Install as specified in Section 03300, Cast-in-Place Concrete.

B. Steps:

1. Install manhole steps at 16 inches on center, plus or minus 1/4-inch tolerance, and locate to provide a continuous vertical ladder.
2. Do not vary spacing between any two adjacent steps by more than 1/2 inch.
3. The distance between wall of manhole and center of rung, measured at the point of embedment, shall be not less than 4 inches nor more than 6-1/4 inches.

3.06 MANHOLE FRAMES AND COVERS

A. Set frames in bed of mortar with mortar carried over flange.

B. Set tops of covers flush with surface of adjoining pavement or ground surface, unless otherwise shown or directed.

C. At locations shown, install exterior manhole frame to structure seals in accordance with manufacturer’s instructions.

3.07 WATERTIGHT MANHOLES

A. Install frame fasteners.

3.08 MANHOLE PIPING

A. Drop Assembly:

1. Extend pipe from the drop to a minimum of 3 feet beyond the manhole excavation into the trench, and connect to sewer pipe with an adapter.
2. Support lower drop elbow with concrete monolithically-placed with manhole base.

B. Flexible Joints:

1. Provide in pipe not more than 1-1/2 feet from manhole walls.
2. Where last joint of pipe is between 1-1/2 and 6 feet from manhole wall, provide flexible joint in manhole wall.

C. Stubouts For Future Connections:

1. Provide same type and class of pipe as specified for use in service connection, lateral, main, or trunk sewer construction. Where there are two different classes of pipe at manhole use higher strength pipe.
2. Grout pipe in precast walls or manhole base to provide watertight seal or use flexible joints as specified herein.
3. Maximum Length: 1-1/2 feet outside manhole wall.
4. Construct invert channels. Unless otherwise approved by CH2M HILL, match inside top elevation of service connection pipe to inside top elevation of outlet pipe.
5. Test Plugs:
   a. Install rubber-gasketed plugs in end of stubouts with gasket joints similar to sewer pipe being used.
   b. Plugs shall withstand internal or external pressures without leakage.
   c. Adequately brace plugs against all hydrostatic or air test pressures.

D. Permanent Plugs: Clean interior contact surfaces of pipes to be cut off or abandoned as shown, and construct plug as follows:

1. Pipe 18 Inches or Less in Diameter: Concrete plug in end, minimum 8 inches in length.
2. Pipe 21 Inches and Larger:
   a. Construct plugs of common brick, concrete block, or concrete.
   b. Plaster exposed face of block or brick plugs with mortar.
3. Plugs shall be watertight and capable of withstanding internal and external pressures without leakage.

3.09 MANHOLES OVER EXISTING PIPING

A. Maintain flow through existing pipelines at all times.

B. Plastic Pipe:

1. Use solvent recommended by pipe manufacturer to slightly soften the pipe wall.
2. Apply a dense coating of clean mortar sand over all areas that will be in contact with concrete.
3. Allow mortar to dry completely prior to placing concrete.

C. Concrete Pipe: Apply a bonding agent on all surfaces to be in contact with concrete.

D. Construct base under existing piping.

E. Construct manhole as specified.

F. Break out existing pipe within new manhole, cover edges with mortar, and trowel smooth.

G. Protect new concrete and mortar work for 7 days after placing concrete.

3.10 CONNECTIONS TO EXISTING MANHOLES

A. Break out existing manhole bases or grouting as necessary.

B. Clean all surfaces and apply a bonding agent.

C. Regrout to provide smooth flow into and through manholes.

D. Provide diversion facilities and perform work necessary to maintain flow during connection.

3.11 FIELD QUALITY CONTROL

A. Hydrostatic Testing:

1. When, in CH2M HILL's opinion, groundwater table is too low to permit visual detection of infiltration leaks, hydrostatically test all manholes.
2. Procedure: Plug inlets and outlets and fill manhole with water to height determined by CH2M HILL.
3. A manhole may be filled 24 hours prior to time of testing, if desired, to permit normal absorption into the walls to take place.
4. Leakage in each manhole shall not exceed 0.1 gallon per hour per foot of head above the invert.

5. Repair manholes that do not meet the leakage test, or do not meet specified requirements from visual inspection.

B. Vacuum Testing In Lieu of Hydrostatic Test:

1. All lift holes shall be plugged with an approved non-shrink grout.
2. All pipes entering the manhole shall be plugged, taking care to securely brace the pipes and plugs from being drawn into the manhole. The manhole shall be set to finish grade and all paving (if applicable) completed.
3. The test head shall be placed at the inside of the top of the frame and the seal inflated in accordance with the manufacturers' recommendations.
4. A vacuum of 10 inches of mercury shall be drawn, the valve on the vacuum line of the test head closed, and the vacuum pump shut off. With the valves closed, the time shall be measured for the vacuum to drop to 9 inches.
5. The manhole shall pass if the time for the vacuum reading to drop from 10 inches of mercury to 9 inches meets or exceeds the values indicated below:

Depth of Manhole (feet)	**Allowable Time (seconds)**		
	48-inch	**60-inch**	**72-inch**
8	20	26	33
10	25	33	41
12	30	39	49
14	35	46	57
16	40	52	67
18	45	59	73
20	50	65	81
22	55	72	89
24	59	78	97
26	64	85	105
28	69	91	113
30	74	98	121

6. If the manhole fails the initial test, necessary repairs shall be made with a non-shrink grout after the vacuum has been released. Retesting shall proceed until a satisfactory test is obtained.

C. Testing Cast-in-Place Manhole Steps:

1. Test each step for a horizontal pullout load of 400 pounds with the load applied over a width of 3-1/2 inches and centered on the rung.
2. Apply the load at a uniform rate until the required test load is reached.
3. Provide suitable hydraulic jacks and gauges to perform the test.

4. Steps will be considered acceptable if they remain solidly embedded after application of test load and if no cracking or fracture of the step nor spalling of the concrete, masonry, or mortar is evident.
5. Replace, or reset and retest, steps failing to withstand required load.

END OF SECTION

SECTION 03300
CAST-IN-PLACE CONCRETE

PART 1 GENERAL

1.01 REFERENCES

A. The following is a list of standards which may be referenced in this section:

1. American Concrete Institute (ACI):
   a. 117, Standard Specification for Tolerances for Concrete Construction and Materials.
   b. 211.1, Standard Practice for Selecting Proportions for Normal, Heavyweight, and Mass Concrete.
   c. 301, Standard Specification for Structural Concrete.
   d. 302.1R, Guide For Concrete Floor and Slab Construction.
   e. 304R, Guide for Measuring, Mixing, Transporting, and Placing Concrete.
   f. 304.2R, Placing Concrete by Pumping Methods.
   g. 305R, Hot Weather Concreting.
   h. 306.1, Standard Specification for Cold Weather Concreting.
   i. 309R, Guide for Consolidation of Concrete.
   j. 318/318R, Building Code Requirements for Structural Concrete.
   k. SP-15, Standard Specification for Structural Concrete.
2. ASTM International (ASTM):
   a. C31, Standard Practice for Making and Curing Concrete Test Specimens in the Field.
   b. C33, Standard Specification for Concrete Aggregates.
   c. C39, Standard Test Method for Compressive Strength of Cylindrical Concrete Specimens.
   d. C88, Standard Test Method for Soundness of Aggregates by Use of Sodium Sulfate or Magnesium Sulfate.
   e. C94, Standard Specification for Ready-Mixed Concrete.
   f. C143, Standard Test Method for Slump of Hydraulic-Cement Concrete.
   g. C150, Standard Specification for Portland Cement.
   h. C157, Standard Test Method for Length Change of Hardened Hydraulic-Cement Mortar and Concrete.
   i. C192, Standard Practice for Making and Curing Concrete Test Specimens in the Laboratory.
   j. C231, Standard Test Method for Air Content of Freshly Mixed Concrete by the Pressure Method.
   k. C260, Standard Specification for Air-Entraining Admixtures for Concrete.

l. C311, Standard Test Methods for Sampling and Testing Fly Ash or Natural Pozzolans for Use as a Mineral Admixture in Portland-Cement Concrete.
m. C452, Standard Test Method for Potential Expansion of Portland-Cement Mortars Exposed to Sulfate.
n. C494, Standard Specification for Chemical Admixtures for Concrete.
o. C595, Standard Specification for Blended Hydraulic Cements.
p. C618, Standard Specification for Coal Fly Ash and Raw or Calcined Natural Pozzolan for Use as a Mineral Admixture in Concrete.
q. C1012, Standard Test Method for Length Change of Hydraulic-Cement Mortars Exposed to a Sulfate Solution.
r. C1018, Standard Test Method for Flexural Toughness and First-Crack Strength of Fiber-Reinforced Concrete (Using Beam with Third-Point Loading).
s. C1116, Standard Specification for Fiber-Reinforced Concrete and Shotcrete
t. C1218 Standard Test Method for Water-Soluble Chloride in Mortar and Concrete
u. C1240, Standard Specification for Silica Fume for Use as a Mineral Admixture in Hydraulic-Cement Concrete, Mortar, and Grout.
v. D2000, Standard Classification System for Rubber Products in Automotive Applications.
w. D4580, Standard Practice for Measuring Delaminations in Concrete Bridge Decks by Sounding.
x. E329, Standard Specification for Agencies Engaged in the Testing and/or Inspection of Materials Used in Construction.

3. National Bureau of Standards: Handbook No. 44, Specifications, Tolerances, and Other Technical Requirements for Commercial Weighing and Measuring Devices.

1.02 DEFINITIONS

A. Defective Areas: Surface defects that include honeycomb, rock pockets, indentations greater than 3/16 inch, cracks 0.005 inch wide and larger as well as any crack that leaks for liquid containment basins and belowgrade habitable spaces; cracks 0.010 inch wide and larger in nonfluid holding structures spalls, chips, air bubbles greater than 3/4 inch in diameter, pinholes, bug holes, embedded debris, lift lines, sand lines, bleed lines, leakage from form joints, fins and other projections, form popouts, texture irregularities, and stains and other color variations that cannot be removed by cleaning.

B. Exposed Concrete: Concrete surfaces that can be seen inside or outside of structures regardless whether concrete is above water, dry at all times, or can be seen when structure is drained.

C. Hydraulic Structures: Liquid containment basins.

D. New Concrete: Less than 60 days old.

E. Slurry Concrete: Mixture of sand, 3/8-inch minus aggregate, cement, and water for wall construction joints.

1.03 QUALITY ASSURANCE

A. Qualifications:

1. Mix Designer: Licensed professional engineer registered in the State of Project.
2. Batch Plant: Currently certified by the National Ready Mixed Concrete Association.

PART 2 PRODUCTS

2.01 MATERIALS

A. Cement: Furnish from one source.

1. Portland Cement Type I or Type II:
   a. Meet ASTM C150.
   b. Alkalies: Maximum 0.60 percent.
   c. Tricalcium Aluminate Content of Type I Cement: Maximum 12 percent.
   d. Nonhydraulic Abovegrade Structures: Type I or Type II cement.
   e. Hydraulic and Belowgrade Structures and Sewers: Type II cement or combination of Type I mixed with fly ash.
   f. Combine fly ash with cement at batch plant or during production of cement in accordance with ASTM C595, Type IP cement.

B. Aggregates: Furnish from one source.

1. Natural Aggregates:
   a. Free from deleterious coatings and substances in accordance with ASTM C33, except as modified herein.
   b. Free of materials and aggregate types causing popouts, discoloration, staining, or other defects on surface of concrete.
2. Nonpotentially Reactive: In accordance with ASTM C33, Appendix XI, Paragraph X1.1.

3. Aggregate Soundness: Test for fine and coarse aggregates in accordance with ASTM C33 and ASTM C88 using sodium sulfate solution.
4. Fine Aggregates:
   a. Clean, sharp, natural sand.
   b. ASTM C33.
   c. Materials Passing 200 Sieve: 4 percent maximum.
   d. Limit deleterious substances in accordance with ASTM C33, Table 1 with material finer than 200 sieve limited to 3 percent, coal and lignite limited to 0.5 percent.
5. Coarse Aggregate:
   a. Natural gravels, combination of gravels and crushed gravels, crushed stone, or combination of these materials containing no more than 15 percent flat or elongated particles (long dimension more than five times the short dimension).
   b. Materials Passing 200 Sieve: 0.5 percent maximum.
   c. Limit deleterious substances in accordance with ASTM C33, Table 3 for exposed concrete.

C. Admixtures: Furnish from one manufacturer.

1. Characteristics: Compatible with each other and free of chlorides or other corrosive chemicals.
2. Air-Entraining Admixture:
   a. ASTM C260, nontoxic after 30 days and contains no chlorides.
   b. Concrete with air-entrainment admixture added shall maintain air percentage as batched, within plus or minus 2 percent for time required for placement into structure.
3. Water-Reducing Admixture: ASTM C494, Type A or Type D.
   a. Manufacturers and Products:
      1) Master Builders, Inc., Cleveland, OH; Pozzolith or Polyheed.
      2) W. R. Grace & Co., Cambridge, MA; WRDA with HYCOL.
      3) Euclid Chemical Co., Cleveland, OH; Eucon WR-91.
4. High Range Water Reducing Admixture (Superplasticizer):
   a. ASTM C494.
   b. Hold slump of 5 inches or greater for time required for placement.
   c. Furnish type as recommended by manufacturer for allowed temperature ranges.
   d. Type F or G.
   e. Manufacturers and Products:
      1) Master Builders, Inc., Cleveland, OH; Rheobuild or Polyheed at dosage greater than 10 ounces per 100 pounds of cement.
      2) W. R. Grace & Co., Cambridge, MA; Daracem 100.

3) Euclid Chemical Co., Cleveland, OH; Eucon 537.

5. Pozzolan (Fly Ash): Class C or Class F fly ash in accordance with ASTM C618, Table 1 and 2, except as modified herein:
   a. Shall not be produced from process that has utilized hazardous or potentially hazardous materials.
   b. Loss on Ignition: Maximum 3 percent.
   c. Water Requirement: Maximum 100 percent of control.
   d. $\frac{CaO(\%) - 5}{FE_2O_3(\%)}$: $Maximum\ 1.5$
   e. ASTM C618, Table 1A shall apply when aggregate or portion of coarse or fine aggregate used is reactive as specified in Paragraph Nonpotentially Reactive.
   f. ASTM C618, Table 2A, Reactivity with Cement Alkalies, apply when aggregate or portions of aggregate is reactive as specified under Paragraph Nonpotentially Reactive.
   g. ASTM C618, Table 2A, Uniformity Requirements, apply when loss on ignition of fly ash furnished exceeds 3 percent.
6. Fly Ash: Maximum 25 percent, minimum 15 percent of total weight of fly ash plus cement.
7. For fly ash not meeting requirements of chemical ratio listed above, furnish the following:
   a. Test fly ash in accordance with ASTM C1012.
   b. Furnish test data confirming fly ash in combination with cement used meets strength requirements, is compatible with air-entraining agents and other additives, and provides increased sulfate resistance equivalent to or better than Type II cement.
   c. Conduct tests using proposed fly ash and cement samples together with control samples using Type II cement without fly ash.

2.02 ANCILLARY MATERIALS

A. Bonding Agent:

1. Furnish two-component epoxy.
2. Consult manufacturer for surface finish, pot life, set time, vertical or horizontal application, and forming restrictions.
3. Manufacturers and Products:
   a. Chemrex, Inc., Shakopee, MN; Concresive.
   b. Sika Chemical Corp., Lyndhurst, NJ; Sikadur 32.
   c. Euclid Chemical Co., Cleveland, OH; Euco Epoxy System.
   d. Contech Services, Inc., Seattle, WA.

B. Bond Breaker:

1. Nonstaining type, providing positive bond prevention.
2. Manufacturers and Products:
   a. Williams Distributors, Inc., Seattle, WA; Williams Tilt-Up Compound.
   b. SCA Construction Supply Div., Superior Concrete Accessories, Franklin Park, IL; Silcoseal 77.
   c. Burke Co., San Mateo, CA; Burke Clean Lift Bond Breaker or Burke Tilt Free Bond Breaker.

C. Repair Material:

1. Contain no chlorides or other chemicals causing steel corrosion.
2. Repair mortar specifically mixed and then tested at Job Site for appearance compatibility prior to use in exposed areas.
3. Low pressure spray or hand applied silica fume mortar, for vertical and overhead repair.
4. Repair mortar system submitted and approved for horizontal concrete surface repairs.

2.03 CONCRETE MIX DESIGN

A. Design: Select and proportion ingredients using trial batches; sample, cure and test concrete mix through approved independent testing laboratory in accordance with ACI 211.1.

1. Concrete Compressive Strength, F’c:
   a. 4,000 psi at 28 days, unless otherwise shown, except 3,000 psi at 28 days for secondary concrete elements such as curbs, sidewalks, and pipe/conduit encasements.
   b. Design lab-cured trial mix cylinders.
   c. Use additional cement or cement plus fly ash above minimum specified if required to meet average compressive strength, F’cr.
   d. Use F’cr as basis for selection of concrete proportions as set forth in ACI 301.
   e. F’cr: Equal to F’c plus 1,200 when data are not available to establish standard deviation.
2. Concrete Fill:
   a. Design for 2,500 psi at 28 days using 1-inch aggregate, 4-inch maximum slump and 0.46 maximum water-cement ratio.
   b. Use water-reducing admixture.

B. Proportions:

1. Design mix to meet aesthetic and structural concrete requirements.
2. In accordance with ACI 211.1, unless specified otherwise.

3. Unless specifically stated otherwise, water-cement ratio (or water-cement plus fly ash ratio) shall control amount of total water added to concrete as follows:

Water-Cement Ratio		
Coarse Aggregate Size	**Maximum W/C Ratio w/ Superplasticizer**	**Maximum W/C Ratio w/o Superplasticizer**
1-1/2”	0.40	0.44
1”	0.40	0.44
3/4”	0.40	0.44

4. Minimum Cement Content (or Combined Cement Plus Fly Ash Content When Fly Ash is Used):
   a. 517 pounds per cubic yard for concrete with 1-1/2-inch maximum size aggregate.
   b. 540 pounds per cubic yard for 1-inch maximum size aggregate.
   c. 564 pounds per cubic yard for 3/4-inch maximum size aggregate.
   d. Increase cement content or combined cement plus fly ash content, as required to meet strength requirements and water-cement ratio.

C. Admixtures:

1. Air Content: 4 to 6 percent when tested in accordance with ASTM C231; 3 percent maximum for interior slabs where heavy-duty concrete floor finish is required.
2. Fly Ash: Maximum 25 percent, minimum 15 percent of total weight of fly ash plus cement.
3. Water Reducers: Use in all concrete.
4. High Range Water Reducers (Superplastizicers): Use at Contractor’s option. Control slump and workability to at least 4-1/2-inch slump at discharge into forms by adjusting high range water reducer at batch plant.

D. Slump Range at Site:

1. 4-1/2 inches minimum, 8 inches maximum for concrete with a high range water reducing admixture.
2. 3 inches minimum and 5 inches maximum for concrete without high range water reducing admixture.

E. Combined Aggregate Gradation:

1. Structures: Select one of the gradations shown in the following table.
2. Combined Gradation Limits: Limits shown are for coarse aggregates and fine aggregates mixed together (combined).

Sieve Sizes	**Combined Gradation**		
	Percentage Passing		
	1-1/2” Max.	**1” Max.**	**3/4” Max.**
2”	- 100	-	-
1-1/2”	95 - 100	- 100	-
1”	65 - 85	90 - 100	- 100
3/4”	55 - 75	70 - 90	92 – 100
1/2”	-		68 – 86
3/8”	40 - 55	45 - 65	57 – 74
No. 4	30 - 45	31 - 47	38 – 57
No. 8	23 - 38	23 - 40	28 – 46
No. 16	16 - 30	17 - 35	20 – 36
No. 30	10 - 20	10 - 23	14 – 25
No. 50	4 - 10	2 - 10	5 – 14
No. 100	0 - 3	0 - 3	0 – 5
No. 200	0 - 2	0 - 2	0 – 2

2.04 CONCRETE MIXING

A. General: In accordance with ACI 304R.

B. Concrete Mix Temperatures: As shown below for various stages of mixing and placing:

CONCRETE TEMPERATURES				
	Concrete Member Size, Minimum Dimension			
Ambient Air Temp.	**<12”**	**12”-36”**	**36”-72”**	**>72”**
Minimum concrete temperature as mixed for indicated air temperature:				
Above 30 deg .F	60 deg. F	55 deg. F	50 deg. F	45 deg. F
0 to 30 deg. F	65 deg. F	60 deg. F	55 deg. F	50 deg. F
Below 0 deg. F	70 deg. F	65 deg. F	60 deg. F	55 deg. F
Maximum allowable gradual temperature drop in first 24 hours after curing period and after end of protection:				
–	50 deg. F	40 deg. F	30 deg. F	20 deg. F

C. Truck Mixers:

1. Equip with electrically actuated counters to readily verify number of revolutions of drum or blades.
2. Counter:
   a. Resettable, recording type, mounted in driver’s cab.
   b. Actuated at time of starting mixers at mixing speeds.
3. Truck mixer operation shall furnish concrete batch as discharged that is homogeneous with respect to consistency, mix, and grading.
4. If slump tests taken at approximately 1/4 and 3/4 points of load during discharge give slumps differing by more than 2 inches when specified, slump is more than 4 inches, discontinue use of truck mixer unless causing condition is corrected and satisfactory performance is verified by additional slump tests.
5. Before attempting to reuse unit, check mechanical details of mixer, such as water measuring, and discharge apparatus, condition of blades, speed of rotation, general mechanical condition of unit, admixture dispensing equipment, and clearance of drum.
6. Do not use nonagitating or combination truck and trailer equipment for transporting ready-mixed concrete.
7. Concrete Volume in Truck:
   a. Limit to 63 percent of total volume capacity in accordance with ASTM C94 when truck mixed.
   b. Limit to 80 percent of total volume capacity when central mixed.
8. Mix each batch of concrete in truck mixer for minimum 70 revolutions of drum or blades at rate of rotation designated by equipment manufacturer.
9. Perform additional mixing, if required, at speed designated by equipment manufacturer as agitating speed.

10. Place materials, including mixing water, in mixer drum before actuating revolution counter for determining number of mixing revolutions.

D. Aggregates: Thoroughly and uniformly wash before use.

E. Admixtures:

1. Air-Entraining Admixture: Add at plant through manufacturer-approved dispensing equipment.
2. Water Reducers: Add prior to addition of high range water reducing admixture (superplasticizers).
3. High range water reducing admixture (superplasticizers) and Air-Entraining Admixtures:
   a. Add at concrete plant only through equipment furnished or approved by admixture manufacturer.
   b. Accomplish variations in slump, working time, and air content for flowable mixes by increasing or reducing high range water reducing admixture (superplasticizers) dose or air-entraining admixture dose at ready-mix plant only.
   c. Equipment shall provide for easy and quick visual verification of admixture amount used for each dose.
   d. Add discharge amount to each load of concrete into separate dispensing container, verify amount is correct, and add to concrete.
   e. Additional dosage of high range water reducing admixture (superplasticizers) may be added in field using manufacturer-approved dispensing when unexpected delays cause too great of slump loss.

2.05 SOURCE QUALITY CONTROL

A. Cement: Test for total chloride content.

B. Fly Ash: Test in accordance with ASTM C311.

C. Batch Plant Inspection: CH2M HILL shall have access to and have right to inspect batch plants, cement mills, and supply facilities of suppliers, manufacturers, and Subcontractors, providing products included in these Specifications.

1. Weighing Scales: Tested and certified within tolerances set forth in the National Bureau of Standards Handbook No. 44.
2. Batch Plant Equipment: Either semiautomatic or fully automatic in accordance with ASTM C94.

PART 3 EXECUTION

3.01 PLACING CONCRETE

A. Preparation: Meet requirements and recommendations of ACI 304R and ACI 301, except as modified herein.

B. Inspection: Notify CH2M HILL at least 1 full working day in advance before starting to place concrete.

C. Discharge Time:

1. As determined by set time, do not exceed 1-1/2 hours after adding cement to water unless special approved time delay admixtures are used. Coordinate time delay admixture information with manufacturer and Engineer prior to placing concrete.
2. Adjust slump or air content at Site by adding admixtures for particular load when approved by CH2M HILL. Then, adjust plant dosage for remainder of placement. Additional dosage at Site shall be through approved dispenser supplied by admixture manufacturer.
3. Maintain required slump throughout time of concrete placement and consolidation. Discontinue use of high range water reducing admixture (superplasticizers) and provide new mix design if it fails to maintain slump between 4 to 8 inches and produce good consolidation for the length of time required. Redesign mix adjusting set control admixtures to maintain setting time in range required.

D. Placement into Formwork:

1. Before depositing concrete, remove debris from space to be occupied by concrete.
2. Prior to placement of concrete, dampen fill under slabs on ground, dampen sand where vapor retarder is specified, and dampen wood forms.
3. Reinforcement: Secure in position before placing concrete.
4. Place concrete as soon as possible after leaving mixer, without segregation or loss of ingredients, without splashing forms or steel above, and in layers not over 1.5 feet deep, except for slabs which shall be placed full depth. Place and consolidate successive layers prior to initial set of first layer to prevent cold joints.
5. Use placement devices, for example, chutes, pouring spouts, and pumps.

6. Vertical Free Fall Drop to Final Placement: 5 feet in forms 8 inches or less wide and 8 feet in forms wider than 8 inches, except as specified.
    a. For placements where drops are greater than specified, use placement device such that free fall below placement device conforms to required value.
    b. Limit free fall to prevent segregation caused by aggregates hitting reinforcing steel.
7. Do not use aluminum conveying devices.
8. Provide sufficient illumination in the interior of forms so concrete deposition is visible, permitting confirmation of consolidation quality.
9. Joints in Footings and Slabs:
    a. Ensure space beneath plastic water stop completely fills with concrete.
    b. During concrete placement, make visual inspection of entire water stop area.
    c. Limit concrete placement to elevation of water stop in first pass, vibrate concrete under water stop, lift water stop to confirm full consolidation without voids, place remaining concrete to full height of slab.
    d. Apply procedure to full length of water stops.
10. If reinforcement is in direct sunlight or is more than 20 degrees F higher in temperature than concrete temperature before placement, wet reinforcement with water fog spray before placing concrete to cool reinforcement.
11. Trowel and round off top exposed edges of walls with 1/4-inch radius steel edging tool.

E. Conveyor Belts and Chutes:

1. Design and arrange ends of chutes, hopper gates, and other points of concrete discharge throughout conveying, hoisting, and placing system for concrete to pass without becoming segregated.
2. Do not use chutes longer than 50 feet.
3. Minimum Slopes of Chutes: Angled to allow concrete to readily flow without segregation.
4. Conveyor Belts:
    a. Approved by CH2M HILL.
    b. Wipe clean with device that does not allow mortar to adhere to belt.
    c. Cover conveyor belts and chutes.

F. Retempering: Not permitted for concrete where cement has partially hydrated.

G. Pumping of Concrete:

1. Provide standby pump, conveyor system, crane and concrete bucket, or other system onsite during pumping, for adequate redundancy to assure completion of concrete placement without cold joints in case of primary placing equipment breakdown.
2. Minimum Pump Hose (Conduit) Diameter: 4 inches.
3. Replace pumping equipment and hoses (conduits) that are not functioning properly.

H. Maximum Size of Concrete Placements:

1. Limit size of each placement to allow for strength gain and volume change due to shrinkage
2. Locate expansion, control, contraction, and construction joints where shown. When expansion or control joints are not shown, provide construction joints at maximum spacing of 40 feet. When expansion or control joint spacing exceeds 60 feet, provide intermediate construction joints at maximum spacing of 40 feet. Uniformly space construction joints. Vertical construction joint shall not be greater than 20 feet from wall corners or intersections
3. Consider beams, girders, brackets, column capitals, and haunches as part of floor or roof system and place monolithically with floor or roof system.
4. Should placement sequence result in cold joint located below finished water surface, install water stop in joint.

I. Minimum Time Between Adjacent Placements:

1. Construction Joints: 7 days (7 days wet cure).
2. Control Joints: 3 days.
3. Expansion Joints/Contraction Joints: 1 day.
4. At least 2 hours shall elapse after depositing concrete in long columns and walls thicker than 8 inches before depositing concrete in beams, girders, or slabs supported thereon.
5. For columns and walls 10 feet in height or less, wait at least 45 minutes prior to depositing concrete in beams, girders, brackets, column capitals, or slabs supported thereon.

J. Removal of Water: Unless tremie method for placing concrete is specified, remove water from space to be occupied by concrete.

K. Consolidation and Visual Observation:

1. Consolidate concrete with internal vibrators with minimum frequency of 8,000 cycles per minute and amplitude as required to consolidate concrete in section being placed.
2. Provide at least one standby vibrator in operable condition at placement Site prior to placing concrete.
3. Consolidation Equipment and Methods: ACI 309R.
4. Provide sufficient windows in forms or limit form height to allow for concrete placement through windows and for visual observation of concrete.
5. Vibration consolidation shall not exceed distance of 3 feet from point of placement.
6. Vibrate concrete in vicinity of joints to obtain impervious concrete.

L. Hot Weather:

1. Prepare ingredients, mix, place, cure, and protect in accordance with ACI 305R.
2. Placement frequency shall be such that lift lines will not be visible in exposed concrete finishes.
3. Maintain concrete temperature below 90 degrees F at time of placement, or furnish test data or provide other proof that admixtures and mix ingredients do not produce flash set plastic shrinkage, or cracking due to heat of hydration. Cool ingredients before mixing to maintain fresh concrete temperatures as specified or less.
4. Provide for windbreaks, shading, fog spraying, sprinkling, ice, wet cover, or other means as necessary to maintain concrete at or below specified temperature.
5. Prevent differential temperature between reinforcing steel and concrete.

M. Cold Weather Placement:

1. Do not place concrete when ambient temperature is below 40 degrees F or approaching 40 degrees F and falling, without special protection as specified or approved by CH2M HILL.
2. Do not place concrete against frozen earth or ice, or against forms and reinforcement with frost or ice present.
3. Provide heated enclosures when air temperatures are below 40 degrees F.
4. Maintain surface temperature of concrete above 40 degrees F and cure concrete, for minimum of 7 days.
5. Provide maximum and minimum thermometers placed on concrete surfaces spaced throughout Work to allow monitoring of concrete surface temperatures representative of Work.

6. In accordance with ACI 306.1 and ACI 301.
7. External Heating Units:
   a. Vent heating units to atmosphere and do not locally heat or dry concrete. Where water cure is specified, maintain wet condition.
   b. Do not exhaust heater flue gases, (causes concrete carbonation due to concentrated carbon dioxide,) directly into enclosed area.

3.02 CONCRETE BONDING

A. Horizontal Construction Joints in Reinforced Concrete Walls:

1. Thoroughly clean and saturate surface of joint with water.
2. Limit slurry concrete placement to 2-inch maximum thickness, 1-inch minimum thickness.
3. Use positive measuring device such as bucket or other device that will contain only enough slurry concrete for depositing in visually measurable area of wall to ensure that portion of form receives appropriate amount of slurry concrete to satisfy placement thickness requirements.
4. Do not deposit slurry concrete from pump hoses or large concrete buckets, unless specified placement thickness can be maintained and verified through inspection windows close to joint.
5. Limit concrete placed immediately on top of slurry concrete to 12 inches thick. Thoroughly vibrate to mix concrete and slurry concrete together.

B. To Existing Concrete:

1. Thoroughly clean and mechanically roughen existing concrete surfaces to roughness profile of 1/4 inch.
2. Saturate surface with water for 24 hours prior to placing new concrete.

3.03 REPAIRING CONCRETE

A. Tie Holes:

1. Fill with nonshrink grout as specified in Section 03600, Grout.
2. Match color of adjacent concrete and demonstrate on mockup panels first.
3. Compact grout using steel hammer and steel tool to drive grout to high density. Cure grout with water.

B. Alternate Form Ties; Through-Bolts:

1. Mechanically roughen entire interior surface of through hole. Epoxy coat roughened surface and drive elastic vinyl plug to half depth. Dry pack entire hole from both sides of plug with nonshrink grout, as specified in Section 03600, Grout. Use only enough water to dry pack grout. Dry pack while epoxy is still tacky. If epoxy has dried, remove epoxy by mechanical means and reapply new epoxy.
2. Compact grout using steel hammer and steel tool to drive grout to high density. Cure grout with water.

C. Exposed Metal Objects:

1. Metal objects not intended to be exposed in as-built condition of structure including wire, nails, and bolts, shall be removed by chipping back concrete to depth of 1 inch and then cutting or removing metal object.
2. Repair area of chipped-out concrete.

D. Blockouts at Pipes or Other Penetrations:

1. Install per details shown on Drawings or submit proposed blockouts for review.
2. Use nonshrink, nonmetallic grout, Category I or II as specified in Section 03600, Grout.

3.04 CONCRETE SLAB FINISHES

A. General:

1. Finish slab concrete per the requirements of ACI 302.1R.
2. Use manual screeds, vibrating screeds, or roller compacting screeds to place concrete level and smooth.
3. Do not use “jitterbugs” or other special tools designed for purpose of forcing coarse aggregate away from surface and allowing layer of mortar, which will be weak and cause surface cracks or delamination, to accumulate.
4. Do not dust surfaces with dry materials.
5. Use evaporation retardant.
6. Round off edges of slabs with steel edging tool, except where cove finish is shown. Steel edging tool radius shall be 1/4 inch for slabs subject to wheeled traffic.

B. Type S-1 (Steel Troweled Finish):

1. Finish by screeding and floating with straightedges to bring surfaces to required finish elevation. Use evaporation retardant.
2. While concrete is still green, but sufficiently hardened to bear a person's weight without deep imprint, wood float to true, even plane with no coarse aggregate visible.
3. Use sufficient pressure on wood floats to bring moisture to surface.
4. After surface moisture has disappeared, hand trowel concrete to produce smooth, impervious surface, free from trowel marks.
5. Burnish surface with an additional troweling. Final troweling shall produce ringing sound from trowel.
6. Do not use dry cement or additional water during troweling, nor will excessive troweling be permitted.
7. Power Finishing:
   a. Approved power machine may be used in lieu of hand finishing in accordance with directions of machine manufacturer.
   b. Do not use power machine when concrete has not attained necessary set to allow finishing without introducing high and low spots in slab.
   c. Do first steel troweling for slab S-1 finish by hand.

C. Type S-2 (Wood Float Finish):

1. Finish slab to receive fill and mortar setting bed by screeding with straightedges to bring surface to required finish plane.
2. Wood float finish to compact and seal surface.
3. Remove laitance and leave surface clean.
4. Coordinate with other finish procedures.

D. Type S-5 (Broomed Finish):

1. Finish as specified for Type S-1 floor finish, except omit final troweling and finish surface by drawing fine-hair broom lightly across surface.
2. Broom in same direction and parallel to expansion joints, or, in the case of inclined slabs, perpendicular to slope, except for round roof slab, broom surface in radial direction.

3.05 CONCRETE SLAB TOLERANCES

A. Slab Tolerances:

1. Exposed Slab Surfaces: Comprise of flat planes as required within tolerances specified.

2. Slab Finish Tolerances and Slope Tolerances: Crowns on floor surface not too high as to prevent 10-foot straightedge from resting on end blocks, nor low spots that allow block of twice the tolerance in thickness to pass under supported 10-foot straightedge.
3. Slab Type S-A: Steel gauge block 5/16 inch thick.
4. Slab Type S-B: Steel gauge block 1/8 inch thick.
5. Slab Type S-A and S-B: Finish Slab Elevation: Slope slabs to floor drain and gutter, and shall adequately drain regardless of tolerances.
6. Thickness: Maximum 1/4 inch minus or 1/2 inch plus from thickness shown. Where thickness tolerance will not affect slope, drainage, or slab elevation, thickness tolerance may exceed 1/2 inch plus.

B. Thickness: Maximum 1/4 inch minus or 1/2 inch plus from thickness shown. Where thickness tolerance will not affect slope, drainage, or slab elevation, thickness tolerance may exceed 1/2 inch plus.

3.06 FIELD QUALITY CONTROL

A. General:

1. Provide adequate facilities for safe storage and proper curing of concrete test cylinders onsite for first 24 hours, and for additional time as may be required before transporting to test lab.
2. Provide concrete for testing of slump, air content, and for making cylinders from the point of discharge into forms. When concrete is pumped, Samples used shall be taken from discharge end of pump hose.
3. Evaluation will be in accordance with ACI 301, Chapter 17, and Specifications.
4. Specimens shall be made, cured, and tested in accordance with ASTM C31 and ASTM C39.
5. Frequency of testing may be changed at discretion of CH2M HILL.
6. Pumped Concrete: Take concrete samples for slump (ASTM C143) and test cylinders (ASTM C31 and C39)and shrinkage specimens (ASTM C157) at placement (discharge) end of line.
7. Reject concrete represented by cylinders failing to meet strength and air content specified.

B. High Range Water Reducer (Superplasticizer) Admixture Segregation Test: Test each truck prior to use on job.

1. Segregation Test Objective: Concrete with 4- to 8-inch slump must stay together when slumped. Segregation is assumed to cause mortar to flow out of mix even though aggregate may stay piled enough to meet slump test.

2. Test Procedure: Make slump test and check for excessive slump and observe to see if mortar or moisture flows from slumped concrete.
3. Reject concrete if mortar or moisture separates and flows out of mix.

C. Cold Weather Placement Tests:

1. During cold weather concreting, cast cylinders for field curing as follows. Use method that will produce greater number of specimens:
   a. Six extra test cylinders from last 100 cubic yards of concrete.
   b. Minimum three specimens for each 2 hours of placing time or for each 100 cubic yards.
2. These specimens shall be in addition to those cast for lab testing.
3. Protect test cylinders from weather until they can be placed under same protection provided for concrete of structure that they represent.
4. Keep field test cylinders in same protective environment as parts of structure they represent to determine if specified strength has been obtained.
5. Test cylinders in accordance with applicable sections of ASTM C31 and C39.
6. Use test results to determine specified strength gain prior to falsework removal or for prestressing.

D. Tolerances:

1. Slab Finish Tolerances and Slope Tolerances:
   a. Floor flatness measurements shall be made day after floor is finished and before shoring is removed to eliminate effects of shrinkage, curing, and deflection.
   b. Support 10-foot long straightedge at each end with steel gauge blocks of thicknesses equal to specified tolerance.
   c. Compliance with designated limits in four of five consecutive measurements is satisfactory, unless defective conditions are observed.

3.07 REINFORCING STEEL

A. General

1. All concrete cast in place shall have reinforcement.

B. Slabs

1. Slabs have 6 in x 6 in welded wire mesh reinforcement.

END OF SECTION

SECTION 03600
GROUT

PART 1 GENERAL

1.01 REFERENCES

A. The following is a list of standards which may be referenced in this section:

1. ASTM International (ASTM):
   a. C230, Standard Specification for Flow Table for Use in Tests of Hydraulic Cement.
   b. C1107, Standard Specification for Packaged Dry, Hydraulic-Cement Grout (Nonshrink).
2. Corps of Engineers (COE):
   a. CRD-C611, Flow of Grout for Preplaced Aggregate Concrete.
   b. CRD-C621, Specification for Nonshrink Grout

1.02 QUALIFICATIONS

A. Nonshrink Grout Manufacturer's Representative: Authorized and trained representative of grout manufacturer. Minimum of 1-year experience that has resulted in successful installation of grouts similar to those for this Project.

B. For grout suppliers not listed herein, see CH2M HILL for supplier approval requirements.

PART 2 PRODUCTS

2.01 NONSHRINK GROUT SCHEDULE

A. Furnish nonshrink grout for applications in grout category in the following schedule:

	Temperature Range	**Max. Placing Time**	
Application	**40 to 100 deg F**	**20 min**	**Greater than 20 min**
Blockouts for gate guides	I or II		II
Precast joints	I or II		II
Column baseplates single-story	I or II		II
Machine bases 25 hp or less	II	II	II
Bases for precast wall sections	II	II	II

Application	Temperature Range	Max. Placing Time	
	40 to 100 deg F	**20 min**	**Greater than 20 min**
Baseplates for columns over one story	II	II	II
Precast base joints higher than one story	II	II	II
Through-bolt openings	II	II	II
Machine bases 26 hp and up	III	III	III
Baseplates and/or soleplates with vibration, thermal movement, etc.	III	III	III

2.02 NONSHRINK GROUT

A. Category I:

1. Nonmetallic and nongas-liberating.
2. Prepackaged natural aggregate grout requiring only the addition of water.
3. Test in accordance with ASTM C1107:
   a. Flowable consistency 140 percent, five drops in 30 seconds, in accordance with ASTM C230.
   b. Flowable for 15 minutes.
4. Grout shall not bleed at maximum allowed water.
5. Minimum strength of flowable grout, 3,000 psi at 3 days, 5,000 psi at 7 days, and 7,000 psi at 28 days.
6. Manufacturers and Products:
   a. Chemrex, Inc., Shakopee, MN; Set Grout.
   b. Euclid Chemical Co., Cleveland, OH; NS Grout.
   c. Dayton Superior Corp., Miamisburg, OH; 1107 Advantage Grout.
   d. US MIX Products, Denver, CO; US Spec Multi-Purpose Grout.
   e. L & M Construction Chemicals, Inc., Omaha, NE; Duragrout.

B. Category II:

1. Nonmetallic, nongas-liberating.
2. Prepackaged natural aggregate grout requiring only the addition of water.
3. Aggregate shall show no segregation or settlement at fluid consistency at specified times or temperatures.
4. Test in accordance with COE CRD-C621 and ASTM C1107, Grade B:

a. Fluid consistency 20 to 30 seconds in accordance with COE CRD-C611.
b. Temperatures of 40, 80, and 100 degrees F.

5. 1 hour after mixing, pass fluid grout through flow cone with continuous flow.
6. Minimum strength of fluid grout, 3,500 psi at 1 day, 4,500 psi at 3 days, and 7,500 psi at 28 days.
7. Maintain fluid consistency when mixed in 1 to 9 yard loads in ready-mix truck.
8. Manufacturers and Products:
   a. Chemrex, Inc., Shakopee, MN; Master Flow 928.
   b. Five Star Products Inc., Fairfield, CT; Five Star 100.
   c. Euclid Chemical Co., Cleveland, OH; Hi Flow Grout.
   d. Dayton Superior Corp., Miamisburg, OH; Sure Grip High Performance Grout.
   e. L & M Construction Chemicals, Inc., Omaha, NE; Crystex.

C. Category III:

1. Metallic and nongas-liberating.
2. Prepackaged aggregate grout requiring only the addition of water.
3. Aggregate shall show no segregation or settlement at fluid consistency at specified times or temperatures.
4. Test in accordance with COE CRD-C621 and ASTM C1107, Grade A:
   a. Fluid consistency 20 to 30 seconds in accordance with COE CRD-C611.
   b. Temperatures of 40 and 100 degrees F.
5. 1 hour after mixing, pass fluid grout through flow cone with continuous flow.
6. Minimum strength of fluid grout, 4,000 psi at 1 day, 5,000 psi at 3 days, and 9,000 psi at 28 days.
7. Maintain fluid consistency when mixed in 1 to 9 yard loads in ready-mix truck.
8. Manufacturer and Product:
   a. Chemrex, Inc., Shakopee, MN; EMBECO 885.
   b. L & M Construction Chemicals, Inc., Omaha, NE; Ferrogrout.

PART 3 EXECUTION

3.01 NONSHRINK GROUT

A. General: Mix, place, and cure nonshrink grout in accordance with grout manufacturer's representative's training instructions.

B. Form Tie or Through-Bolt Holes: Provide nonshrink grout, Category I and II, fill space with dry pack dense grout hammered in with steel tool and hammer.

Through-bolt holes, coordinate dry pack dense grout application with vinyl plug and bonding agent in Section 03300, Cast-in-Place Concrete.

C. Grouting Machinery Foundations:

1. Block out original concrete or finish off at distance shown below bottom of machinery base with grout. Prepare concrete surface by sandblasting, chipping, or by mechanical means to remove any soft material.
2. Set machinery in position and wedge to elevation with steel wedges, or use cast-in leveling bolts.
3. Form with watertight forms at least 2 inches higher than bottom of plate.
4. Fill space between bottom of machinery base and original concrete in accordance with manufacturer's representative's training instructions.

3.02 FIELD QUALITY CONTROL

A. Evaluation and Acceptance of Nonshrink Grout:

1. Provide a flow cone and cube molds with restraining plates onsite. Continue tests during Project as demonstrated by grout manufacturer's representative.
2. Perform flow cone and bleed tests, and make three 2-inch by 2-inch cubes for each 25 cubic feet of each type of nonshrink grout used. Use restraining caps for cube molds in accordance with COE CRD-C621.
3. For large grout applications make three additional cubes and one more flow cone test. Include bleed test for each additional 25 cubic feet of nonshrink grout placed.
4. Consistency: As specified in Article Nonshrink Grout. Grout with consistencies outside range requirements shall be rejected.
5. Segregation: As specified in Article Nonshrink Grout. Grout when aggregate separates shall be rejected.
6. Nonshrink grout cubes shall test equal to or greater than minimum strength specified.
7. Strength Test Failures: Nonshrink grout work failing strength tests shall be removed and replaced.
8. Perform bleeding test to demonstrate grout will not bleed.
9. Store cubes at 70 degrees F.

END OF SECTION

SECTION 11306
DUPLEX SUBMERSIBLE GRINDER PUMP STATION

PART 1 GENERAL

1.01 REFERENCES

A. The following is a list of standards that may be referenced in this Section:

1. ASTM International (ASTM):
   a. A48, Standard Specification for Gray Iron Castings.
   b. A576, Standard Specification for Steel Bars, Carbon, Hot-Wrought, Special Quality.
2. Hydraulic Institute Standards (HIS).
3. National Electric Code (NEC).
4. National Electrical Manufacturers Association (NEMA).
5. National Fire Protection Association (NFPA): 70, National Electric Code.
6. Underwriters Laboratories Inc. (UL).

1.02 DEFINITIONS

A. Terminology pertaining to pumping unit performance and construction shall conform to ratings and nomenclature of Hydraulic Institute Standards.

1.03 SUBMITTALS

A. Action Submittals to CH2M HILL:

1. Make, model, weight, and horsepower of each equipment assembly.
2. Complete catalog information, descriptive literature, specifications, and identification of materials of construction of both pumps and sump pit assembly, including cover.
3. Performance data curves showing head, capacity, horsepower demand, and pump efficiency over entire operating range of pump, from shutoff to maximum capacity. Indicate separately head, capacity, horsepower demand, overall efficiency, and minimum submergence required at guarantee point.
4. Power and control wiring diagrams, including terminals and numbers.
5. Complete motor nameplate data, as defined by NEMA, from motor manufacturer.
6. Factory-finish system.
7. Bearing life calculations.

B. Informational Submittals:

1. Factory and Field Performance Test Reports.
2. Special shipping, storage and protection, and handling instructions.
3. Manufacturer's printed installation instructions.
4. Suggested spare parts list to maintain equipment in service for period of 5 years. Include list of special tools required for checking, testing, parts replacement, and maintenance with current price information.
5. List special tools, materials, and supplies furnished with equipment for use prior to and during startup and for future maintenance.
6. Operation and Maintenance Data.
7. Grinder mechanism.

1.04 EXTRA MATERIALS

A. Furnish for this set of pumps:

1. One set mechanical seals.
2. One complete set of special tools required to dismantle pump.

PART 2 PRODUCTS

2.01 GENERAL

A. Pump and Electrical Driver: Meet requirements for class, group, and division location in accordance with NFPA 70. All components of lift station package are to be explosion proof.

2.02 SUPPLEMENTS

A. Specific requirements are attached to this section as supplements.

2.03 COMPONENTS

A. Pump station shall consist of all equipment, including, two pumps complete with motors, control system, guide rail and anchoring brackets, base elbow, power cable(s), and pump lifting cable(s), and manufacturer's approved fiberglass sump pit and aluminum cover.

1. Pump metal parts that come into contact with guide rail or cable system shall be made of nonsparking materials.
2. Control panel and level switches.
3. Fiberglass wet well basin, 3 feet in diameter. Aluminum cover shall be hinged for easy access, and lockable with CH2M HILL's padlock. Stainless Steel bolts shall secure the cover to the wet well basin.

B. Lifting Arrangement: 2 feet minimum, stainless steel chain, and one "grip-eye." Attach chain permanently to pump and access platform with stainless steel wire rope. "Grip-eye" will be capable of being threaded over and engaging links of stainless steel chain so pump and motor may be lifted with "grip-eye" and independent hoist.

C. Sliding guide bracket shall be integral part of pump unit. Each pump unit shall be guided by no less than two guide bars, or equivalent cable system, and pressed tightly against discharge connection elbow with metal-to-metal contact, or through use of profile-type gasket, provided that gasket is attached to pump's flange and can be easily accessed for inspection when pump is lifted out of wetwell.

D. Motor nameplate horsepower shall not be exceeded at any head-capacity point on pump curve.

E. Pump motor and sensor cables shall be suitable for submersible pump application and cable sizing shall conform to NEC specifications for pump motors. Cable shall be of sufficient length to reach junction boxes without strain or splicing.

F. Pump motor stator, rotor and bearing shall be mounted in a sealed submersible type housing. The stator winding shall have Class F insulation, (155 degrees C or 311 degrees F.), and a dielectric oil filled motor, NEMA L design (single phase). Pump and motor shall be specifically designed to allow operation in dry or partially submerged conditions. Pump shall not require cooling jackets.

G. Grinding mechanism must be capable of grinding all materials found in domestic sewage into a finely ground slurry with particle size dimensions no greater than ¼ inch.

2.04 CONTROL PANEL

A. All electrical wiring and materials shall conform to NEC standards.

B. NEMA 4 painted steel enclosure, for outdoor duty.

C. Free standing, post mounted final location to be pre-approved by CH2M HILL.

D. Control panel shall include:

1. Main circuit breaker disconnect interlocked with panel door.
2. Combination circuit breaker type, NEMA rated motor starters.
3. Fused control power transformer, 120V ac.
4. Alternator and pump lead-lag controls.

5. ON/OFF/AUTO switches.
6. Running lights.
7. High level indication.
8. Normally closed, dry, 5 amps at 120V ac contacts for future remote indication of:
   a. High level alarm.
   b. Pump failure (temperature or moisture alarm).
9. Terminal strip for interfacing with external wiring.
10. High temperature indication.
11. Moisture alarm indication.
12. Alarm (high temperature, moisture, or high level) beacon located on top of panel.
13. Lightning protection.
14. Intrinsically safe relays as required for UL validation.
15. Alarm silence button.
16. Document pocket located inside panel with pump and panel operation and maintenance manual and separate laminated pump curve.
17. 110-volt, duplex GFI outlet, weather-protected, and accessible from outside of panel.
18. Run hour meter.
19. 50 watts minimum, condensation heater with thermostat.
20. UL listing mark.
21. Label warning against electric shock affixed to outer door.
22. Nameplate shall be affixed to outer door including pump model number, voltage, phase, hertz, ampere rating and horsepower rating of pumps.

E. Pre-wired and factory tested by manufacturer supplying pump to assure compatibility of controls and motors, and singe source responsibility of the equipment assembly.

F. Mount control switches, indicating lights, and switches on hinged front panel.

G. Single Feed: 240 volts, single-phase. If three-phase electric feed is feasible for use, see CH2M HILL for approval.

H. Control panel shall automatically alternate lead and lag pump status so that no pump will activate twice consecutively. If one pump should fail for any reason, the second pump shall temporarily become the lead pump for each pump cycle.

2.05 ACCESSORIES

A. Float Switch: must be adjustable from surface.

1. Provide float switch for:
   a. Low, Low Level: Pumps off.
   b. Low Level: First (lead) pump on.
   c. High Level: Second (lag) pump on.
   d. High, High Level: Alarm activation.

B. Equipment Identification Plate: 16-gauge stainless steel with 1/4-inch die-stamped equipment tag number securely mounted in readily visible location.

C. Lifting Lugs: Equipment weighing over 100 pounds.

D. Anchor Bolts: Type 316 stainless steel, sized by equipment manufacturer.

2.06 FACTORY FINISHING

A. Manufacturer's standard epoxy system for continuous submergence in corrosive water.

2.07 SOURCE QUALITY CONTROL

A. Control Panel:

1. Inspect control panels for required construction, electrical connection, and intended function.
2. Test control panel furnished.

B. Pump:

1. Factory Performance Test:
   a. In accordance with HIS 11.6, for submersible pump tests.
   b. Include test data sheets, curve test results, performance test logs.
2. Conduct on each pump.
3. Perform under actual or approved simulated operating conditions.
   a. Throttle discharge valve to obtain pump data points on curve at 2/3, 1/3, and shutoff conditions.

C. Submersible Motor Functional Test: In accordance with HIS 11.6.

PART 3 EXECUTION

3.01 INSTALLATION

A. Install in accordance with manufacturer's printed instructions.

B. Connect suction and discharge piping without imposing strain to pump flanges.

C. No portion of pump shall bear directly on floor of sump.

3.02 FIELD FINISHING

A. None required.

3.03 FIELD QUALITY CONTROL

A. Functional Test: Conduct on each pump.

1. Alignment: Test complete assemblies for correct rotation, proper alignment and connection, and quiet operation.
2. Flow Output: Measured by instrumentation and storage provided by Contractor.
3. Operating Temperatures: Monitor bearing areas on pump and motor for abnormally high temperatures.
4. Test for continuous 3-hour period.
5. Test Report Requirements: In accordance with Hydraulic Institute Standards for submersible pump tests HIS 1.6 and 11.6.

B. Vibration Test:

1. Test with units installed and in normal operation, and discharging to connected piping systems at design rates, shall not develop vibration exceeding limits specified in HIS 11.6.
2. If units exhibit vibration in excess of limits, adjust or modify as necessary. Units that cannot be adjusted or modified to conform as specified shall be replaced.

3.04 MANUFACTURER'S SERVICES

A. Manufacturer's Representative: Present at Site or classroom designated by CH2M HILL, for minimum person-days listed below, travel time excluded:

1. One person-day for installation assistance and inspection, including functional and performance testing and completion of Manufacturer's Certificate of Proper Installation, as well as facility startup.

3.05 SUPPLEMENTS

A. The supplements listed below, following "End of Section," are part of this Specification.

1. Data Sheets: Pump and motor.

PART 4 SITE IMPROVEMENTS

4.01 APRON SLAB

A. All grinder pump stations shall have an Apron Slab, as shown in standard detail 2805 (Pump Station Apron Slab).

4.02 SECURITY/PROTECTION

A. All grinder pumps shall have some form of protection from vehicles, maintenance vehicles, etc.

1. Use bollards to protect grinder pump station from vehicular damage.
2. Use security fencing to protect grinder pump station from damage caused b vandals, and to protect un-authorized person from entering area.

4.03 POTABLE WATER SOURCE

A. Potable water source must be within 50 feet of grinder pump station, and must be accessible 24 hours a day to CH2M HILL.

B. If potable water source is not located within 50 feet of grinder pump station, a frost-free hydrant shall be located within 10 feet of grinder pump station.

4.04 ACCESS ROADWAY

A. All-weather access to grinder pump station is required for maintenance.

1. Gravel roadway may be acceptable, see CH2M HILL for approval.

END OF SECTION

SUBMERSIBLE PUMP DATA SHEET, 11306-_____

Tag Numbers: _____

Pump Name: _____

Manufacturer and Model Number: (1) Hydromatic, HPGLX200, 4.5" Dia. Impellor
(2) _____

SERVICE CONDITIONS

Liquid Pumped (Material and Percent): Raw, Domestic Sewage

Pumping Temperature (Fahrenheit): Normal: 60 Max 100 Min 40

Specific Gravity at 60 Degrees F: 1.0 Viscosity Range: _____

pH: 6 - 8

Abrasive (Y/N) Y_____ Possible Scale Buildup (Y/N): _____

Minimum diameter solid pump can pass (inches) Pump shall grind to ¼" slurry

PERFORMANCE REQUIREMENTS

Capacity (US gpm): Rated: verify required capacity with design loading calculation.

Total Dynamic Head (Ft): Rated: verify total dynamic head with design loading calculations.

Min. Rated Pump Hydraulic Efficiency at Rated Capacity (%):_____

Max. Pump Speed at Rated Capacity (rpm): 3450 Constant (Y/N): Y
Adjustable (Y/N): N

DESIGN AND MATERIALS

Pump Type: Heavy-Duty Nonclog (Y/N) Y Other: Grinder Pump

Volute Material: Cast Iron ASTM A48 Pump Casing Material: Cast Iron ASTM A48

Motor Housing Material: Cast Iron ASTM A48

Wear Rings Case (Y/N) _____ Material: _____

Wear Ring Impeller (Y/N): _____ Material: _____

SUBMERSIBLE PUMP DATA SHEET, 11306- _____

Tag Numbers: _____

Pump Name: _____

Fasteners: Stainless Steel

Impeller: Semi-open design with hydrodynamic sealing vanes on the rear shroud
Material: Cast Iron ASTM A48

Shaft Material: Carbon Steel, ASTM A576 with stainless steel sleeve or all stainless steel.

Base Elbow: Cast Iron ASTM A48

Double Mechanical Seal (Y/N): Y Bearing Life (Hrs): 50,000

DRIVE MOTOR

Horsepower: 2.0 Voltage: 240 Phase: Single Synchronous Speed (rpm): 3450

Enclosure: EXP_____

Other Features: _____

Moisture Detection Switches (Y/N): Y

Thermal Protection Embedded in Windings (Y/N): Y

REMARKS Motor and pumps shall be explosion proof.

SECTION 15202
VALVES AND OPERATORS

PART 1 GENERAL

1.01 REFERENCES

A. The following is a list of standards which may be referenced in this section:

1. American National Standards Institute (ANSI):
   a. B16.1, Cast Iron Pipe Flanges and Flanged Fittings.
   b. C111/A21.11, Rubber-Gasket Joints for Ductile-Iron Pressure Pipe and Fittings.
2. American Society of Sanitary Engineers (ASSE): 1011, Performance Requirements for Hose Connection Vacuum Breakers.
3. American Water Works Association (AWWA):
   a. C500, Metal-Seated Gate Valves for Water Supply Service.
   b. C504, Rubber-Seated Butterfly Valves.
   c. C508, Swing-Check Valves for Waterworks Service, 2 in. (50 mm) through 24 in. (600 mm) NPS.
   d. C509, Resilient-Seated Gate Valves for Water Supply Service.
   e. C510, Double Check Valve, Backflow Prevention Assembly.
   f. C511, Reduced-Pressure Principle Backflow Prevention Assembly.
   g. C540, Power-Actuating Devices for Valves and Sluice Gates.
   h. C550, Protective Epoxy Interior Coatings for Valves and Hydrants.
   i. C606, Grooved and Shouldered Joints.
   j. C800, Underground Service Line Valves and Fittings.
4. ASTM International (ASTM):
   a. A276, Standard Specification for Stainless Steel Bars and Shapes.
   b. A351/A351M, Standard Specification for Castings, Austenitic, Austenitic-Ferric (Duplex), for Pressure-Containing Parts.
   c. A564/A564M, Standard Specification for Hot-Rolled and Cold-Finished Age-Hardening Stainless Steel Bars and Shapes.
   d. B61, Standard Specification for Steam or Valve Bronze Castings.
   e. B62, Standard Specification for Composition Bronze or Ounce Metal Castings.
   f. B98/B98M, Standard Specification for Copper-Silicon Alloy Rod, Bar, and Shapes.
   g. B127, Standard Specification for Nickel-Copper Alloy (UNS N04400) Plate, Sheet, and Strip.

h. B139, Standard Specification for Phosphor Bronze Rod, Bar and Shapes.
i. B164, Standard Specification for Nickel-Copper Alloy Rod, Bar, and Wire.
j. B194, Standard Specification for Copper-Beryllium Alloy Plate, Sheet, Strip, and Rolled Bar.
k. B584, Standard Specification for Copper Alloy Sand Castings for General Applications.
l. D429, Standard Test Methods for Rubber Property-Adhesion to Rigid Substrates.
m. D1784, Standard Specification for Rigid Poly(Vinyl Chloride) (PVC) Compounds and Chlorinated Poly(Vinyl Chloride) (CPVC) Compounds.

5. Manufacturers Standardization Society (MSS):
   a. SP-81, Stainless Steel, Bonnetless, Flanged Knife Gate Valves.
   b. SP-88, Diaphragm Type Valves.
6. NSF International (NSF).

PART 2 PRODUCTS

2.01 GENERAL

A. Valve to be suitable for intended service. Renewable parts not to be of a lower quality than specified.

B. Valve same size as adjoining pipe.

C. Valve ends to suit adjacent piping.

D. Size operator to operate valve for the full range of pressures and velocities.

E. Valve to open by turning counterclockwise.

F. Factory mount operator, actuator, and accessories.

2.02 MATERIALS

A. Bronze and brass valve components and accessories that have surfaces in contact with water to be alloys containing less than 16 percent zinc and 2 percent aluminum.

1. Approved alloys are of the following ASTM designations: B61, B62, B98/B98M (Alloy UNS No. C65100, C65500, or C66100), B139 (Alloy UNS No. C51000), B584 (Alloy UNS No. C90300 or C94700), B164, B194, and B127.

2. Stainless steel Alloy 18-8 may be substituted for bronze.

2.03 FACTORY FINISHING

A. Epoxy Lining and Coating:

1. Use where specified for individual valves described herein.
2. In accordance with AWWA C550 unless otherwise specified.
3. Either two-part liquid material or heat-activated (fusion) material except only heat-activated material if specified as “fusion” or “fusion bonded” epoxy.
4. Minimum 7-mil dry film thickness except where limited by valve operating tolerances.

B. Exposed Valves: Safety isolation valves and lockout valves with handles, handwheels, or chain wheels “safety yellow.”

2.04 VALVES

A. Gate Valves:

1. Type V130 Resilient Seated Gate Valve, 3 Inches to 20 Inches:
   a. Iron body, resilient seat, bronze mounted, ANSI Class 125 flanged ends, nonrising stem, 2-inch operating nut, in accordance with AWWA C509, design working water pressure 200 psig for 2 inches through 12 inches and 150 psig for 16 inches and 20 inches, full port, fusion-epoxy coated inside and outside per AWWA C550, NSF Standard 61 certified.
   b. Manufacturers and Products:
      1) M&H Valve; AWWA C509.
      2) U.S. Pipe; Metroseal.
2. Type V132 Resilient Seated Gate Valve 3 Inches to 20 Inches, for Buried Service:
   a. Iron body, resilient seat, bronze mounted, mechanical joint ends, non-rising stem, in accordance with AWWA C509, 2-inch operating nut, design working water pressure 200 psig for 2 inches through 12 inches, full port, fusion epoxy coated inside and outside per AWWA C550. NSF Standard 61 certified.
   b. Manufacturers and Products:
      1) M&H Valve; AWWA C509.
      2) U.S. Pipe; Metroseal.
3. Type V137 Resilient Seated Gate Valve 4 Inches to 12 Inches, for buried service:
   a. UL Listed and FM Approved for fire protection, iron body, resilient seat, bronze mounted. Provide mechanical joint ends,

nonrising stem, 2-inch operating nut, in accordance with AWWA C509, design working water pressure 200 psig, full port, fusion-epoxy coated inside and outside per AWWA C550, NSF Standard 61 certified. Provide indicator post flange and indicator post assembly with lockable handle, where applicable.

b. Manufacturers and Products:
   1) Kennedy Valve; Ken-Seal II.
   2) M&H Valve; Style 4067.
   3) Mueller; P-2360.

B. Ball Valves:

1. Type V300 Ball Valve 2 Inches and Smaller for General Water and Air Service:
   a. Two-piece end entry type, bronze body and end piece, hard chrome-plated bronze or brass ball, RTFE seats and packing, blowout-proof stem, zinc-coated steel hand lever operator with vinyl grip, rated 600-pound WOG, 150-pound SWP. For steam service, provide stainless steel ball and stem.
   b. Manufacturers and Products:
      1) Threaded:
         a) Milwaukee; BA100.
         b) Nibco; T-580-70.
         c) Conbraco Apollo; 70-100.
      2) Soldered:
         a) Milwaukee; BA150.
         b) Nibco; S-580-70.
         c) Conbraco Apollo; 70-200.

C. Plug Valves:

1. Type V400 Eccentric Plug Valve 2 Inches and Smaller:
   a. Nonlubricated type rated 175 psig CWP, drip-tight shutoff with pressure from either direction, cast iron body, threaded ends, lever operator, cast iron plug with round or rectangular port, plug coated with Buna-N, stem bearing lubricated stainless steel or bronze, stem seal multiple V-rings, or U-cups with O-rings of nitrile rubber.
   b. Manufacturers and Products:
      1) Pratt; Ballcentric.
      2) DeZurik; Style PEC.
      3) Milliken; Millcentric Series 603.
2. Type V405 Eccentric Plug Valve 3 Inches to 12 Inches:

a. Nonlubricated type rated 175 psig CWP, drip-tight shutoff with pressure from either direction, cast iron body, exposed service flanged ends per ANSI B16.1 or grooved ends in accordance with AWWA C606 for rigid joints, buried service mechanical joint ends, unless otherwise shown.
b. Plug cast iron with round or rectangular port of no less than 80 percent of connecting pipe area and coated with Buna-N, seats welded nickel, stem bearing lubricated stainless steel or bronze, stem seal multiple V-rings, or U-cups with O-rings of nitrile rubber, grit seals on stem.
c. For buried service, provide external epoxy coating.
d. Operators:
   1) 3-Inch to 4-Inch Valves: Wrench lever manual.
   2) 6-Inch to 12-Inch Valves: Totally enclosed, geared, manual operator with handwheel, 2-inch nut, or chain wheel. Size operator for 1.5 times the maximum operating shutoff pressure differential for direct and reverse pressure, whichever is higher. For buried service, provide completely sealed operator filled with heavy lubricant and 2-inch nut.
e. Manufacturers and Products:
   1) Pratt; Ballcentric.
   2) DeZurik; Style PEC.
   3) Milliken; Millcentric Series 600.

D. Butterfly Valves:

1. General:
   a. AWWA C504 valves to be in full compliance with AWWA C504 and following requirements:
      1) Suitable for throttling operations and infrequent operation after periods of inactivity.
      2) Elastomer seats which are bonded or vulcanized to the body shall have adhesive integrity of bond between seat and body assured by testing, with minimum 75-pound pull in accordance with ASTM D429, Method B.
      3) Bubble-tight with rated pressure applied from either side.
      4) No travel stops for disc on interior of body.
      5) Self-adjusting V-type or O-ring shaft seals.
      6) Isolate metal-to-metal thrust bearing surfaces from flowstream.
      7) Provide traveling nut or worm gear actuator with handwheel. Valve actuators to meet the requirements of AWWA C504.

8) Provide linings and coatings per AWWA unless otherwise indicated on the Drawings or specified.

b. Non-AWWA butterfly valves to meet the following actuator requirements: For above ground installations, provide handle and notch plate for valves 6-inch and smaller and heavy-duty, totally-enclosed gearbox type operators with handwheel, position indicator and travel stops for valves 8-inch and larger, unless otherwise indicated on the Drawings or specified.

2. Type V500 Butterfly Valve 3 Inches to 72 Inches:
   a. Flanged end.
   b. AWWA C504, Class 150B.
   c. Cast iron body, cast or ductile iron disc, Type 304 stainless steel shafts, Buna-N rubber seat bonded or molded in body only, and stainless steel seating surface.
   d. Manufacturers and Products:
      1) Pratt; Model 2FII or XR-70.
      2) DeZurik; AWWA Valve.
3. Type V504 Butterfly Valve General Service 4 Inches to 48 Inches:
   a. Mechanical joint end type.
   b. AWWA C504 Class 150B.
   c. Cast iron body, cast or ductile iron disc, Type 304 stainless steel shafts, Buna-N rubber seat bonded or molded in body only, and stainless steel seating surface.
   d. Manufacturers and Products:
      1) Pratt; Groundhog.
      2) DeZurik; Buried AWWA Valve.

E. Check and Flap Valve:

1. Type V608 Swing Check Valve 2 Inches to 24 Inches:
   a. AWWA C508, 125-pound flanged ends, cast iron body, bronze body seat, bronze mounted cast iron clapper with bronze seat, stainless steel hinge shaft.
   b. Valves, 2 inches through 12 inches rated 175-pound working pressure and 14 inches through 24 inches rated 150-pound working pressure. Valves to be fitted with adjustable outside lever and weight or adjustable outside lever and spring. Increasing-pattern body valve may be used where increased outlet piping size is shown.
   c. Manufacturers and Products:
      1) Milliken; Figure 801
      2) Clow; Style 5382 or 5381.
      3) M & H Valve; Style 159, or 259.
      4) Mueller Co.; No. A-2600 Series.

2. Type V632 Ball Check Valve 3 Inches and Larger:
   a. Flanged end, iron body valve with cleanout and floating or sinking type hollow steel ball to properly match installation, vulcanized nitrile rubber exterior, flanges ANSI B16.1, Class 125, rated 150-pound working pressure, suitable for vertical up or horizontal flow.
   b. Manufacturers and Products:
      1) FLYGT Corp.
      2) Flomatic Corp.
      3) Golden Anderson.
3. Type V634 Rubber Flapper Check Valve 2 Inches to 24 Inches:
   a. Iron body, ANSI B16.1, Class 125 flanges, steel-reinforced Buna-N flapper raised seating ring, rated 150-pound CWP.
   b. Manufacturers and Products:
      1) APCO; Series 100.
      2) Val-Matic; “Swingflex.”
4. Type V642 - Reduced-Pressure Principle Backflow Prevention Assembly 3/4 Inch to 10 Inches:
   a. Two resilient-seated check valves with an independent relief valve between the valves, two non-rising stem resilient-seated isolation valves, test cocks, in accordance with AWWA C511, rated 175 psi maximum working pressure, meets requirements of USC Foundation For Cross-Connection Control and Hydraulic Research. Sizes 3/4-inch to 2-inch shall include two non-rising stem, bronze body resilient-seated check and ball valves for isolation. Sizes 2-1/2-inch to 10-inch shall include two non-rising stem resilient seated check and gate valves and are lined and coated with epoxy per AWWA C550 for isolation.
   b. Manufacturers and Products: Watts; Series 009/909.
5. Type V645 Weighted Lever Detector Check Valve 4 inches to 10 inches
   a. Flanged end, iron body valve, rubber seal operated by a weighted lever with rubber to bronze clapper seat, rated 175 psi maximum working pressure.
   b. Valve must be FM approved.
   c. 4-inch size shall include a 5/8-inch bypass line, and 6 to 10 inch size shall include a 1-inch bypass line. Bypass line shall include shutoff valve, swing check and positive displacement meter of the same diameter.
   d. Manufacturers and Products: Hersey: Model EDC III
6. Type V646 Double Detector Check Valve 4 inches to 10 inches
   a. Assembly shall include meter as specified in Section 02518, Water Service Connections, Part 2.12
   b. Manufacturer and Product.
      1. Wilkins Model 350

F. Air Release Valves:

1. Type V752 Sewage Air Release Valve 2 Inches to 4 Inches:
   a. Suitable for sewage service; automatically exhausts entrained air that accumulates in a system.
   b. Rated working pressure of 150 psi, operating pressure of less than 10 psi, built and tested to AWWA C512.
   c. Materials: Cast iron or ductile iron body and cover with 2-inch NPT threaded inlet and 1/2-inch NPT threaded outlet with piping or tubing to drain back to wet well, concave or skirted stainless steel float and trim; Buna-N resilient seat. Provide with full-port ball valve for isolation.
   d. Manufacturers and Products:
      1) APCO Valve and Primer Corp.; Series 400 SARV.
      2) Val-Matic Valve; Series 48.

2.05 OPERATORS

A. Manual Operator:

1. General:
   a. Operator force not to exceed 40 pounds under any operating condition, including initial breakaway. Gear reduction operator when force exceeds 40 pounds.
   b. Operator self-locking type or equipped with self-locking device.
   c. Position indicator on quarter-turn valves.
   d. Worm and gear operators one-piece design worm-gears of gear bronze material. Worm hardened alloy steel with thread ground and polished. Traveling nut type operators threader steel reach rods with internally threaded bronze or ductile iron nut.
2. Exposed Operator:
   a. Galvanized and painted handwheels.
   b. Lever operators allowed on quarter-turn valves 8 inches and smaller.
   c. Cranks on gear type operators.
   d. Chain wheel operator with tiebacks, extension stem, floor stands, and other accessories to permit operation from normal operation level.
   e. Valve handles to take a padlock, and wheels a chain and padlock.
3. Buried Operator:
   a. Buried service operators on valves larger than 2-1/2 inches shall have a 2-inch AWWA operating nut. Buried operators on valves 2 inches and smaller shall have cross handle for operation by

forked key. Enclose moving parts of valve and operator in housing to prevent contact with the soil.

b. Design buried service operators for quarter-turn valves to withstand 450 foot-pounds of input torque at the FULLY OPEN or FULLY CLOSED positions, grease packed and gasketed to withstand a submersion in water to 10 psi.

c. Buried valves shall have extension stems, bonnets, and valve boxes.

2.06 ACCESSORIES

A. T-Handled Operating Wrench:

1. 1 each galvanized operating wrenches, 4 feet long.
2. Manufacturers and Products:
   a. Mueller; No. A-24610.
   b. Clow No.; F-2520.
3. 1 each galvanized operating keys for cross handled valves.

B. Extension Bonnet for Valve Operator: Complete with enclosed stem, extension, support brackets, and accessories for valve and operator.

1. Manufacturers and Products:
   a. Pratt.
   b. DeZurik.

C. Floor Box and Extension Stem:

1. Plain type, for support of nonrising type stem.
2. Complete with solid extension stem, operating nut, and stem guide brackets.
3. Stem Guide: Space such that stem L/R ratio does not exceed 200.
4. Anchor Bolts: Type 304 SST.
5. Manufacturers and Products:
   a. Neenah Foundry; R 7506.
   b. Clow; No. F5690.

D. Cast Iron Valve Box: Designed for traffic loads, sliding type, with minimum of 6-inch ID shaft.

1. Box: Cast iron with minimum depth of 9 inches.
2. Lid: Cast iron, minimum depth 3 inches, marked WATER.
3. Extensions: Cast iron.

E. Concrete Valve Box: Designed for traffic loads, sliding type, with minimum of 8-inch ID shaft.

1. Box: Concrete, minimum depth 12 inches, cast iron ring seat.
2. Lid: Cast iron, minimum depth 3 inches, marked WATER.
3. Extensions: Concrete.

PART 3 EXECUTION

3.01 INSTALLATION

A. Flange Ends:

1. Flanged valve boltholes shall straddle vertical centerline of pipe.
2. Clean flanged faces, insert gasket and bolts, and tighten nuts progressively and uniformly.

B. Screwed Ends:

1. Clean threads by wire brushing or swabbing.
2. Apply joint compound.

C. Valve Installation and Orientation:

1. General:
   a. Install valves so handles operate from fully open to fully closed without encountering obstructions.
   b. Install valves in location for easy access for routine operation and maintenance.
   c. Install valves per manufacturer’s recommendations.
2. Gate, Globe, and Ball Valves:
   a. Install operating stem vertical when valve is installed in horizontal runs of pipe having centerline elevations 4 feet 6 inches or less above finished floor, unless otherwise shown.
   b. Install operating stem horizontal in horizontal runs of pipe having centerline elevations greater than 4 feet 6 inches above finish floor, unless otherwise shown.
3. Eccentric Plug Valves:
   a. Unless otherwise restricted or shown on Drawings, install valve as follows:
      1) Liquids with suspended solids service with horizontal flow: Install valve with stem in horizontal position with plug up when valve is open. Install valve with seat end upstream (flow to produce unseating pressure).

2) Liquids with suspended solids service with vertical flow: Install valve with seat in highest portion of valve (seat up).
3) Clean Liquids and Gas Service: Install valve with seat end downstream of higher pressure when valve is closed (higher pressure forces plug into seat).

4. Butterfly Valves:
   a. Unless otherwise restricted or shown on Drawings, install valve a minimum of 8 diameters downstream of an elbow or branch tee and with shaft in horizontal position.
   b. For vertical elbow or branch tee immediately upstream of the valve, install valve with shaft in vertical position.
   c. For horizontal elbow or branch tee immediately upstream of the valve, install valve with shaft in horizontal position.
   d. When installed immediately downstream of a swing check, install valve with shaft perpendicular to swing check shaft.
   e. For free inlet or discharge into basins and tanks, install valve with shaft in vertical position.
5. Check Valves:
   a. Install valve in horizontal or vertical flow (up) flow piping only.
   b. Install swing check valve with shaft in horizontal position.

D. Install a line size ball valve and union upstream of each solenoid valve, in-line flow switch, or other in-line electrical device, excluding magnetic flowmeters, for isolation during maintenance.

E. Locate valve to provide accessibility for control and maintenance. Install access doors in finished walls and plaster ceilings for valve access.

F. Extension Stem for Operator: Where the depth of the valve is such that its centerline is more than 3 feet below grade, furnish an operating extension stem with 2-inch operating nut to bring the operating nut to a point 6 inches below the surface of the ground and/or box cover.

G. Torque Tube: Where operator for quarter-turn valve is located on floor stand, furnish extension stem torque tube of a type properly sized for maximum torque capacity of the valve.

H. Floor Box and Stem: Steel extension stem length shall locate operating nut in floor box.

I. Chain Wheel and Guide: Install chain wheel and guide assemblies or chain lever assemblies on manually operated valves over 6 feet 9 inches above finished floor. Where chains hang in normally traveled areas, use appropriate "L" type tie-back anchors.

3.02 TESTS AND INSPECTION

A. Valve may be either tested while testing pipelines, or as a separate step.

B. Test that valves open and close smoothly under operating pressure conditions. Test that two-way valves open and close smoothly under operating pressure conditions from both directions.

C. Inspect air and vacuum valves as pipe is being filled to verify venting and seating is fully functional.

D. Count and record number of turns to open and close valve; account for any discrepancies with manufacturer's data.

E. Set, verify, and record set pressures for all relief and regulating valves.

F. Automatic valves to be tested in conjunction with control system testing. Set all opening and closing speeds, limit switches, as required or recommended by the CH2M HILL.

G. Test hydrostatic relief valve seating; record leakage. Adjust and retest to maximum leakage of 0.1 gpm per foot of seat periphery.

END OF SECTION

SECTION 15205
PIPING SPECIALTIES

PART 1 GENERAL

1.01 REFERENCES

A. The following is a list of standards which may be referenced in this section:

1. American National Standards Institute (ANSI):
   a. B16.1, Cast Iron Pipe Flanges and Flanged Fittings.
   b. B16.5, Pipe Flanges and Flanged Fittings.
2. American Water Works Association (AWWA):
   a. C153/A21.53, Ductile-Iron Compact Fittings, 3 in. (76 mm) through 64 in. (1,600 mm), for Water Service.
   b. C210, Liquid-Epoxy Coating Systems for the Interior and Exterior of Steel Water Pipelines.
   c. C213, Fusion-Bonded Epoxy Coating for the Interior and Exterior of Steel Water Pipelines.
   d. C219, Bolted, Sleeve-Type Couplings for Plain-End Pipe.
   e. Manual M11, Steel Pipe—A Guide for Design and Installation.
3. ASTM International (ASTM):
   a. A153, Standard Specification for Zinc Coating (Hot-Dip) on Iron and Steel Hardware.
   b. A276, Standard Specification for Stainless and Heat-Resisting Steel Bars and Shapes.
4. National Fire Protection Association (NFPA): 24, Standard for the Installation of Private Fire Service Mains and Their Appurtenances.
5. NSF International (NSF): NSF 61, Drinking Water System Components—Health Effects.

PART 2 PRODUCTS

2.01 GENERAL

A. Provide required piping specialty items, whether shown or not shown on Drawings, as required by applicable codes and standard industry practice.

B. Rubber ring joints, mechanical joints, flexible couplings, and proprietary restrained ductile iron pipe joints are considered flexible joints; welded, screwed, and flanged pipe joints are not considered flexible.

2.02 COUPLINGS

A. General:

1. Coupling linings for use in potable water systems shall be in conformance with NSF 61.
2. Couplings shall be rated for working pressure not less than the specified service condition and not less than 150 psi.
3. Couplings shall be lined and coated with fusion-bonded epoxy in accordance with AWWA C213.
4. Unless thrust restraint is provided by other means, couplings shall be harnessed in accordance with requirements of AWWA Manual M11, and restrained with retainer bar or ring welded to pipe end.
5. Sleeve type couplings shall conform to AWWA C219 and shall be hydraulically expanded beyond minimum yield for accurate sizing and proofing of tensile strength.

B. Flexible Sleeve Type Coupling:

1. Manufacturers and Products:
   a. Ductile Iron Pipe:
      1) Dresser Piping Specialties; Style 38.
      2) Smith-Blair, Inc.; Style 411.

C. Bolted Split Sleeve Type Coupling: Victaulic Co., Depend-O-Lok couplings.

D. Flanged Coupling Adapter:

1. Manufacturers and Products:
   a. Ductile Iron Pipe:
      1) Dresser Piping Specialties; Style 912.
      2) Smith-Blair, Inc.; Style 127.

E. Restrained Flange Adapter:

1. Pressure Rating:
   a. Minimum Working Pressure Rating: Not less than 150 psi.
   b. Safety Factor: Not less than two times working pressure and shall be supported by manufacturer’s proof testing.
2. Thrust Restraint:
   a. Provide hardened steel wedges that bear against and engage outer pipe surface, and allow articulation of pipe joint after assembly while wedges remain in their original setting position on pipe surface.
   b. Products employing set screws that bear directly on pipe will not be acceptable.
3. Manufacturer and Product: EBAA Iron Sales Co.; Mega-Flange.

F. Dismantling Joints:

1. Pressure Rating:
   a. Minimum working pressure rating shall not be less than rating of the connecting flange.
   b. Proof testing shall conform to requirements of AWWA C219 for bolted couplings.
2. Manufacturers and Products:
   a. Dresser Piping Specialties; Style 131.
   b. Viking Johnson.

2.03 SERVICE SADDLES

A. Double-Strap Iron:

1. Pressure Rating: Capable of withstanding 150 psi internal pressure without leakage or over stressing.
2. Run Diameter: Compatible with outside diameter of pipe on which saddle is installed.
3. Taps: Iron pipe threads.
4. Materials:
   a. Body: Malleable or ductile iron.
   b. Straps: Galvanized steel.
   c. Hex Nuts and Washers: Steel.
   d. Seal: Rubber.
5. Manufacturers and Products:
   a. Smith-Blair; Series 313 or 366.
   b. Dresser; Style 91.

B. Nylon-Coated Iron for Plastic Piping:

1. Pressure Rating: Capable of withstanding 150 psi internal pressure without leakage or over stressing.
2. Run Diameter: Compatible with outside diameter of pipe on which saddle is installed.
3. Materials:
   a. Body: Nylon-coated iron.
   b. Seal: Buna-N.
   c. Clamps and Nuts: Stainless steel.
4. Manufacturer: Smith-Blair; Style 315 or 317.

2.04 PIPE SLEEVES

A. Steel Pipe Sleeve:

1. Minimum Thickness: 3/16 inch.
2. Seep Ring:
   a. Center steel flange for water stoppage on sleeves in exterior or water-bearing walls, 3/16-inch minimum thickness.
   b. Outside Diameter: 3 inches greater than pipe sleeve outside diameter.
   c. Continuously fillet weld on each side all around.
3. Factory Finish:
   a. Galvanizing:
      1) Hot-dip applied, meeting requirements of ASTM A153.
      2) Electroplated zinc or cadmium plating is unacceptable.

B. Insulated and Encased Pipe Sleeve: Manufacturer and Product: Pipe Shields, Inc.; Models WFB, WFB-CS and-CW Series, as applicable.

2.05 SLAB, FLOOR, WALL AND ROOF PENETRATIONS

A. Ductile Iron Wall Pipe:

1. Diameter and Ends: Same as connecting ductile iron pipe.
2. Thickness: Equal to or greater than remainder of pipe in line.
3. Thrust Collars:
   a. Rated for thrust load developed at 250 psi.
   b. Safety Factor: 2, minimum.
   c. Material and Construction: Ductile iron or cast iron, cast integral with wall pipe wherever possible, or thrust rated, welded attachment to wall pipe.
4. Manufacturers:
   a. American Cast Iron Pipe Co.
   b. U.S. Pipe and Foundry Co.

B. Steel or Stainless Steel Wall Pipe:

1. Same material and thickness as connecting pipe, except 1/4-inch minimum thickness.
2. Lining: Same as connecting pipe.
3. Thrust Collar:
   a. Outside diameter 3 inches greater than outside diameter of wall pipe.
   b. Continuously fillet welded on each side all around.

PART 3 EXECUTION

3.01 GENERAL

A. Provide accessibility to piping specialties for control and maintenance.

3.02 PIPING FLEXIBILITY PROVISIONS

A. General:

1. Thrust restraint shall be provided as required by the application for adequate restraint.
2. Install flexible couplings to facilitate piping installation.

B. Flexible Joints at Concrete Backfill or Encasement: Install within 18 inches or one-half pipe diameter, whichever is less, from the termination of any concrete backfill or concrete encasement.

C. Flexible Joints at Concrete Structures:

1. Install 18 inches or less from face of structures; joint may be flush with face.
2. Install a second flexible joint, whether or not shown.
   a. Pipe Diameter 18 Inches and Smaller: Within 18 inches of first joint.
   b. Pipe Diameter Larger than 18 Inches: Within one pipe diameter of first joint.

D. Flexible expansion joints shall be provided to compensate for earth settlement at buried piping connections to structure wall pipes. Wrap complete joint assembly in a double layer of polyethylene encasement.

3.03 PIPING TRANSITION

A. Applications:

1. Provide complete closure assembly where pipes meet other pipes or structures.
2. Pressure Pipeline Closures: Plain end pieces with double flexible couplings, unless otherwise shown.
3. Restrained Joint Pipe Closures: Install with thrust tie-rod assemblies as shown.
4. Gravity Pipe Closures: As specified for pressure pipelines, or concrete closures.

5. Concrete Closures: Use to make connections between dissimilar pipe where standard rubber gasketed joints or flexible couplings are impractical, as approved.
6. Elastomer sleeves bonded to pipe ends are not acceptable.

B. Installation:

1. Flexible Transition Couplings: Install in accordance with coupling manufacturer's instructions to connect dissimilar pipe and pipes with a small difference in outside diameter.
2. Concrete Closures:
   a. Locate away from structures so there are at least two flexible joints between closure and pipe entering structure.
   b. Clean pipe surface before placing closure collars.
   c. Wet nonmetallic pipe thoroughly prior to pouring collars.
   d. Prevent concrete from entering pipe.
   e. Extend collar a minimum of 12 inches on each side of joint with minimum thickness of 6 inches around outside diameter of pipe.
   f. Make entire collar in one placement.
   g. After concrete has reached initial set, cure by covering with well-moistened earth.

3.04 PIPING EXPANSION

A. Piping Installation: Allow for thermal expansion due to differences between installation and operating temperatures.

B. Expansion Joints:

1. Flanged Piping Systems: Elastomer bellows expansion joint.
2. Nonmetallic Pipe: Teflon bellows expansion joint.
3. Screwed and Soldered Piping Systems: Copper or galvanized and black steel pipe expansion compensator, as applicable.
4. Air and Water Service above 120 Degrees F: Metal bellows expansion joint.
5. Pipe Run Offset: Flexible metal hose.

C. Anchors: Install to withstand expansion joint thrust loads and to direct and control thermal expansion.

3.05 SERVICE SADDLES

A. Ferrous Metal Piping (except stainless steel): Double-strap iron.

B. Plastic Piping: Nylon-coated iron.

3.06 COUPLINGS

A. General:

1. Install in accordance with manufacturer's written instructions.
2. Before coupling, clean pipe holdback area of oil, scale, rust, and dirt.
3. Remove pipe coating if necessary to present smooth surface.
4. Application:
   a. Metallic Piping Systems: Flexible couplings, transition couplings, and flanged coupling adapters.
   b. Concrete Encased Couplings: Flexible coupling.

3.07 FLEXIBLE PIPE CONNECTIONS TO EQUIPMENT

A. Install to prevent piping from being supported by equipment, for vibration isolation, and where shown.

B. Product Applications Unless Shown Otherwise:

1. Nonmetallic Piping: Teflon bellows connector.
2. Copper Piping: Flexible metal hose connector.
3. Compressor and Blower Discharge: Metal bellows connector.
4. All Other Piping: Elastomer bellows connector.

C. Limit Bolts and Control Rods: Tighten snug prior to applying pressure to system.

3.08 PIPE SLEEVES

A. Application:

1. Above Grade in Nonsubmerged Areas: Hot-dip galvanized after fabrication.
2. Below Grade or in Submerged or Damp Environments: Shop-lined and coated.

B. Installation:

1. Support noninsulating type securely in formwork to prevent contact with reinforcing steel and tie-wires.
2. Caulk joint with rubber sealant or seal with wall penetration seal.

3.09 SLAB, FLOOR, WALL AND ROOF PENETRATIONS

A. Applications:

1. Watertight and Below Ground Penetrations:
   a. Wall pipes with thrust collars.
   b. Provide taps for stud bolts in flanges to be set flush with wall face.
2. Nonwatertight Penetrations: Pipe sleeves with seep ring.
3. Existing Walls: Rotary drilled holes.
4. Fire-Rated or Smoke-Rated Walls, Floors or Ceilings: Insulated and encased pipe sleeves.

B. Wall Pipe Installation:

1. Isolate embedded metallic piping from concrete reinforcement.
2. Support wall pipes securely by formwork to prevent contact with reinforcing steel and tie-wires.

END OF SECTION

Part D
Standard Drawings For Water and Wastewater Construction

U.S. Army DOC
Fort Campbell

Version No. 3

Additional Parts Include:
Part A: *Water Distribution System Design Guide*
Part B: *Wastewater System Design Guide*
Part C: *Standard Specifications For Water and Wastewater Construction*

February 2007

CH2MHILL

Building 1746
1st and Kentucky Avenue
Fort Campbell, KY 42223

THRUST BLOCK NOTES

1. KEEP CONCRETE CLEAR OF JOINT AND JOINT ACCESSORIES.
2. CONCRETE THRUST BLOCKING SHALL BE POURED AGAINST UNDISTURBED EARTH.
3. REQUIRED VOLUMES OR BEARING AREAS AT FITTINGS SHALL BE AS INDICATED, ADJUSTED, IF NECESSARY, TO CONFORM TO THE TEST PRESSURE(S) AND ALLOWABLE SOIL BEARING STRESS(ES) PROVIDED BY THE ENGINEER.
4. THRUST BLOCK VOLUMES FOR VERTICAL BENDS HAVING UPWARD RESULTANT THRUSTS ARE BASED ON TEST PRESSURE OF 150 PSIG AND THE WEIGHT OF CONCRETE = 4050 LBS/CU YD. TO COMPUTE VOLUMES FOR DIFFERENT TEST PRESSURES, USE THE FOLLOWING EQUATION: VOLUME = (TEST PRESS./150) x (TABLE VALUE).
5. BEARING AREAS FOR HORIZONTAL BEND THRUST BLOCKS ARE BASED ON TEST PRESSURE OF 150 PSIG AND AN ALLOWABLE SOIL BEARING STRESS OF 2000 LBS/SQ FT. TO COMPUTE BEARING AREAS FOR DIFFERENT TEST PRESSURES AND SOIL BEARING STRESSES, MULTIPLY TABLE VALUES BY THE FACTOR (13.33)(P'/S'b), WHERE:

   P' =ACTUAL TEST PRESSURE, PSIG

   S'b=ACTUAL ALLOWABLE SOIL BEARING PRESSURE, PSF.
6. TEST PRESSURES PER SPECIFICATIONS.
7. THRUST BLOCKS FOR VERTICAL BENDS HAVING DOWNWARD RESULTANT THRUSTS SHALL BE THE SAME AS FOR HORIZONTAL BENDS.
8. BEARING AREAS, VOLUMES, AND SPECIAL BLOCKING DETAILS SHOWN ON DRAWINGS TAKE PRECEDENCE OVER THIS STANDARD
9. BEARING AREA OF THRUST BLOCK SHALL NOT BE LESS THAN 1.0 SQ FT.
10. VERTICAL BENDS THAT REQUIRE A THRUST BLOCK VOLUME EXCEEDING 5 CUBIC YARDS REQUIRE SPECIAL BLOCKING DETAILS.

VOLUME OF THRUST BLOCK IN CUBIC YARDS (VERTICAL BENDS)			
FITTING SIZE	BEND ANGLE (DEGREES)		
	45°	22 1/2°	11 1/4°
4	1.1	0.4	0.2
6	2.7	1.0	0.4
8	4.0	1.5	0.6
10	6.0	2.3	0.9
12	8.5	3.2	1.3
14	11.5	4.3	1.8
16	14.8	5.6	2.3

FITTING SIZE	ROD SIZE	EMBEDMENT
12"AND LESS	#6	30"
14"-16"	#8	36"

MASTIC COATED RODS OVER FITTING AND EMBEDDED IN CONCRETE (SEE TABLE AT LEFT FOR SIZES). COAT ENTIRE ROD PRIOR TO PLACING CONCRETE.

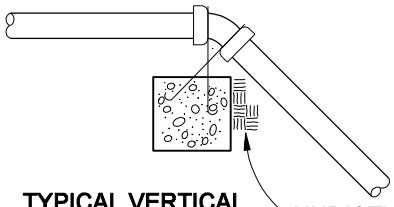

TYPICAL VERTICAL BEND PROFILE

UNDISTURBED EARTH

CONCRETE THRUST BLOCKS (SHEET 1 OF 2)

NTS

2005

FORT CAMPBELL, KY
STANDARD DRAWINGS FOR WATER AND WASTEWATER CONSTRUCTION
FEBRUARY 2007

CH2MHILL

fc2005a_05_01.dgn

THRUST BLOCK DETAILS

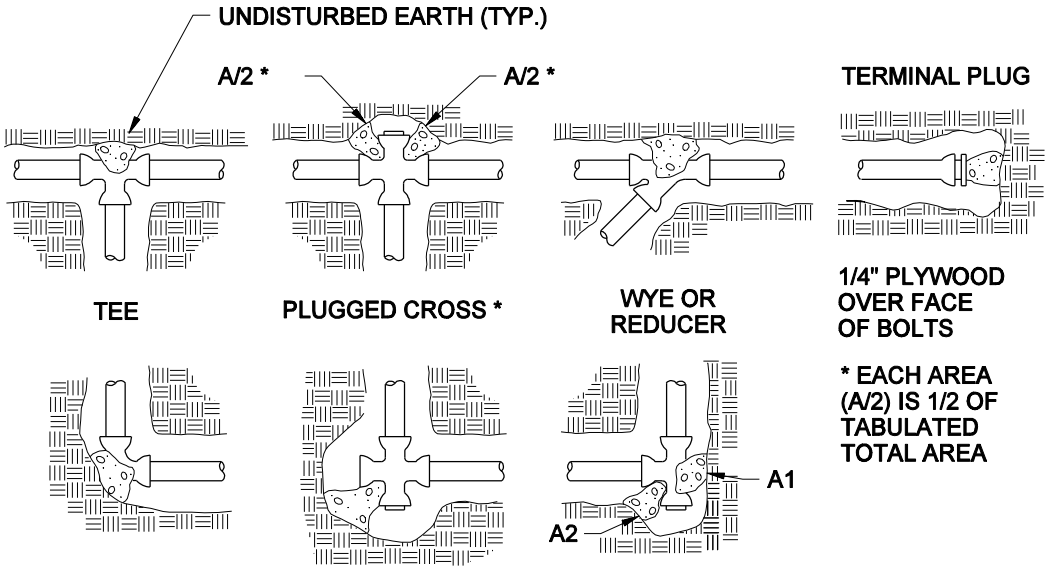

PLAN

NTS

BEARING AREA OF THRUST BLOCKS IN SQ. FT. (HORIZONTAL BENDS)							
FITTING SIZE	TEE, WYE, PLUG, OR CAP	90° BEND PLUGGED CROSS	TEE PLUGGED RUN		BEND ANGLE (DEGREES)		
			A1	A2	45°	22 1/2°	11 1/4°
4	1.0	1.4	1.9	1.4	1.0	-	-
6	2.1	3.0	4.3	3.0	1.6	1.0	-
8	3.8	5.3	7.6	5.4	2.9	1.5	1.0
10	5.9	8.4	11.8	8.4	4.6	2.4	1.2
12	8.5	12.0	17.0	12.0	6.6	3.4	1.7
14	11.5	16.3	23.0	16.3	8.9	4.6	2.3
16	15.0	21.3	30.0	21.3	11.6	6.0	3.0
18	19.0	27.0	38.0	27.0	14.6	7.6	3.8
20	23.5	33.3	47.0	33.3	18.1	9.4	4.7
24	34.0	48.0	68.0	48.0	26.2	13.6	6.8

CONCRETE THRUST BLOCKS (SHEET 2 OF 2)

NTS

2005

FORT CAMPBELL, KY
STANDARD DRAWINGS FOR WATER AND WASTEWATER CONSTRUCTION
FEBRUARY 2007

CH2MHILL

fc2005b_05_01.dgn

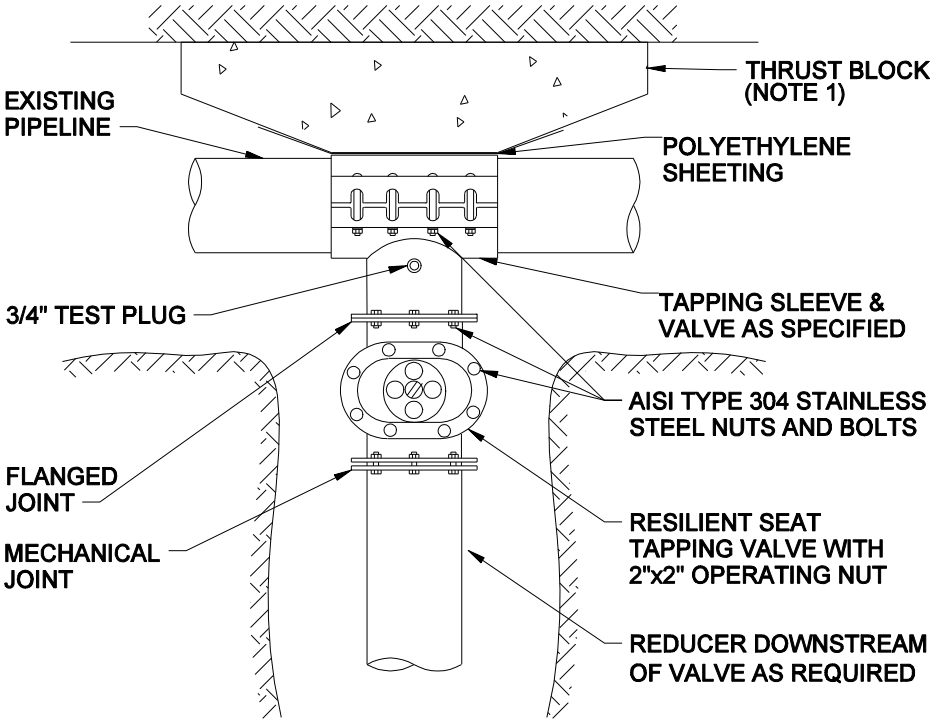

PLAN VIEW

NOTES:

1. SIZE THRUST BLOCK IN ACCORDANCE WITH 2005 REQUIREMENTS.
2. PRESSURE TEST INSTALLED TAPPING SLEEVE AND VALVE ASSEMBLY BEFORE TAPPING EXISTING MAIN.
3. ALL TAPS SHALL BE MADE WITH AN APPROVED TAPPING DEVICE.
4. USE FOR CONNECTIONS TO EXISTING PIPING UNLESS OTHERWISE SHOWN ON PLANS.

TAPPING TEE

NTS

2010

FORT CAMPBELL, KY
STANDARD DRAWINGS FOR WATER AND
WASTEWATER CONSTRUCTION
FEBRUARY 2007

CH2MHILL

fc2010_05_01.dgn

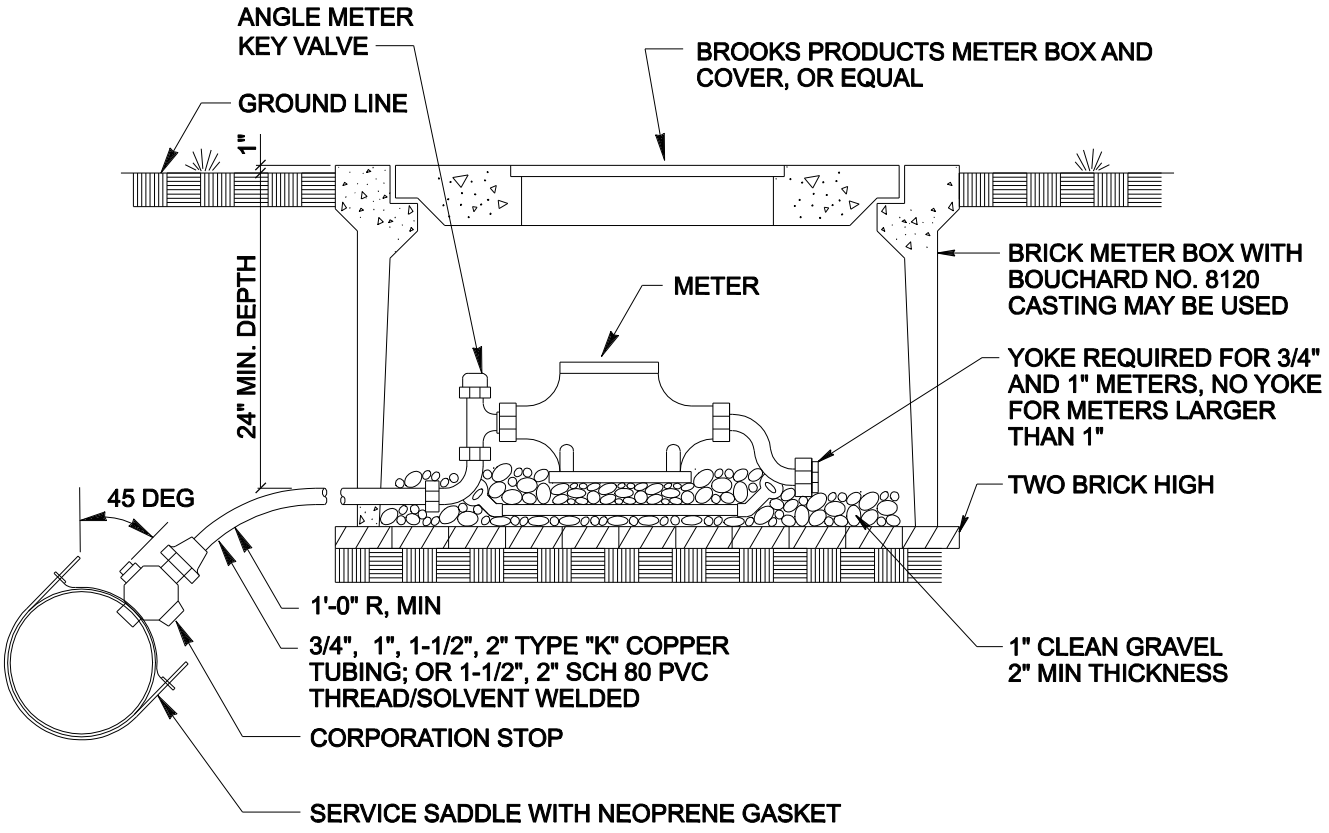

3/4, 1, 1-1/2, AND 2-INCH WATER SERVICE CONNECTION

NTS

2011

FORT CAMPBELL, KY
STANDARD DRAWINGS FOR WATER AND
WASTEWATER CONSTRUCTION
FEBRUARY 2007

CH2MHILL

fc2011_05_01.dgn

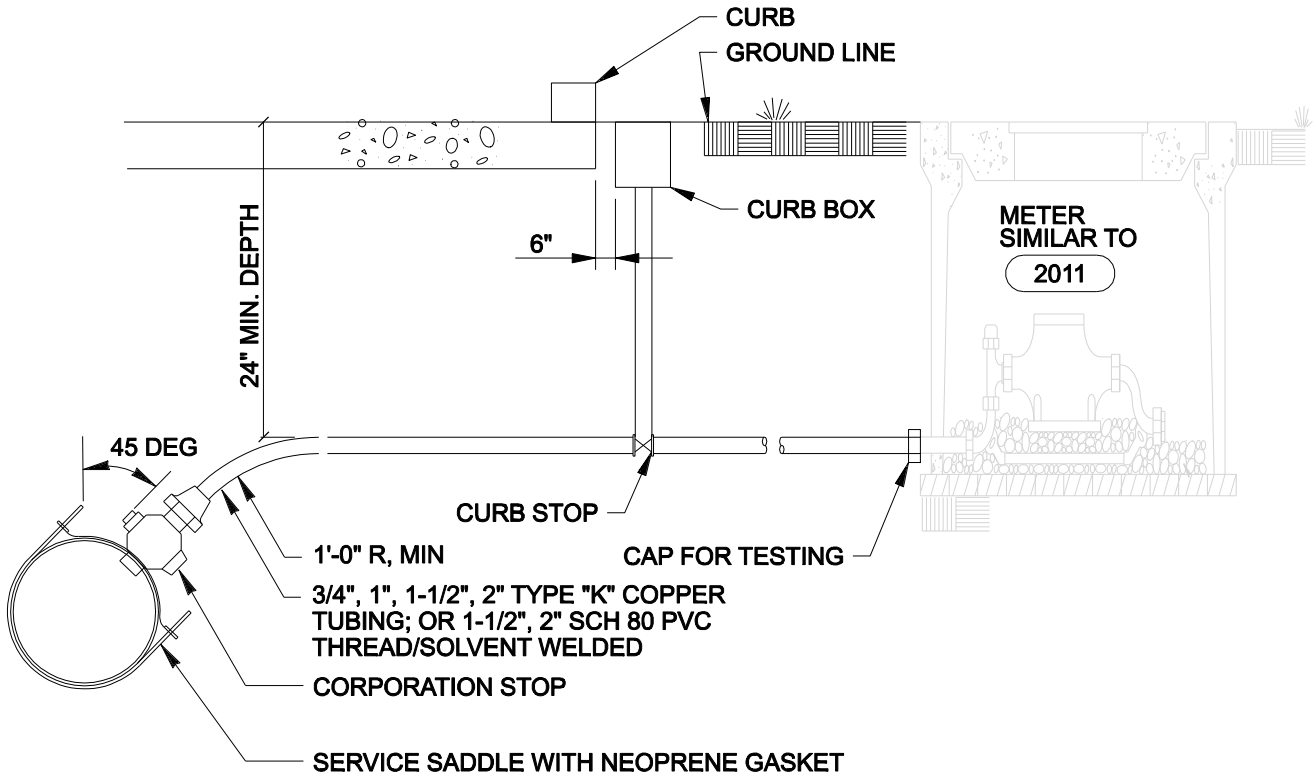

CURB STOP

NTS

2012

FORT CAMPBELL, KY
STANDARD DRAWINGS FOR WATER AND
WASTEWATER CONSTRUCTION
FEBRUARY 2007

CH2MHILL

fc2012_05_01.dgn

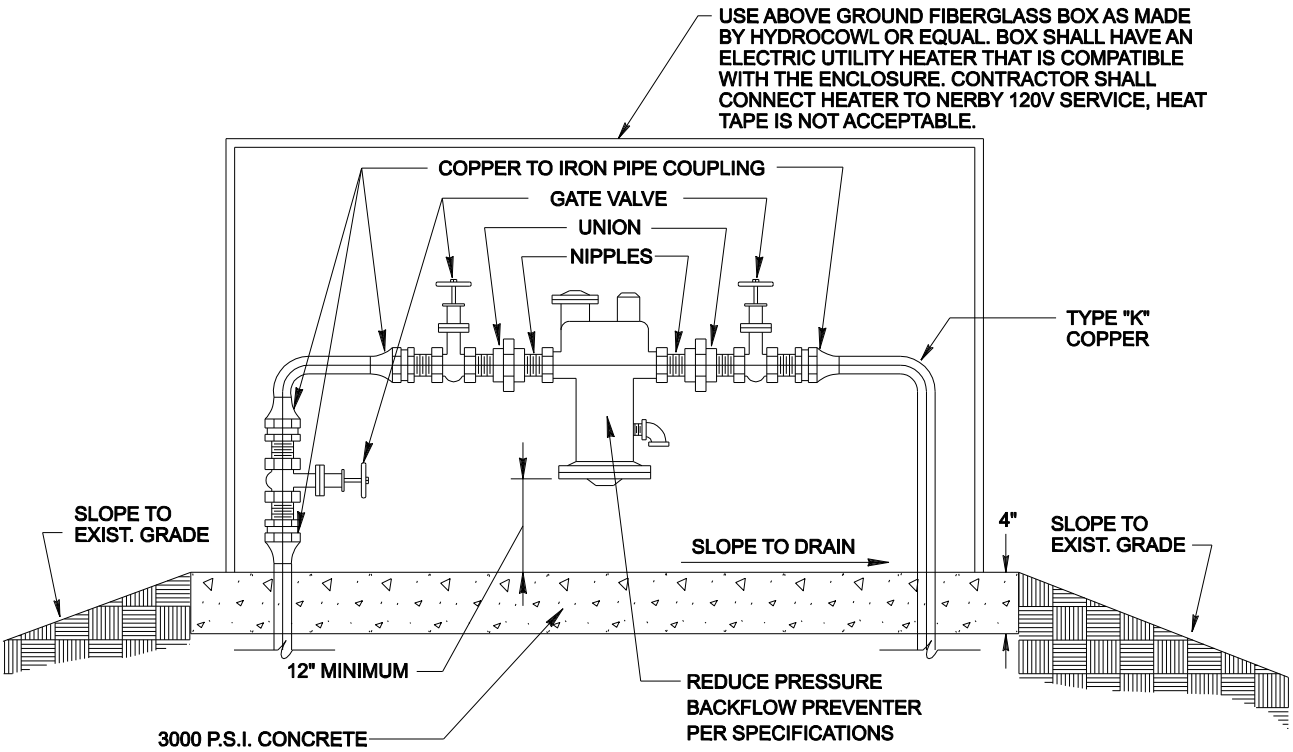

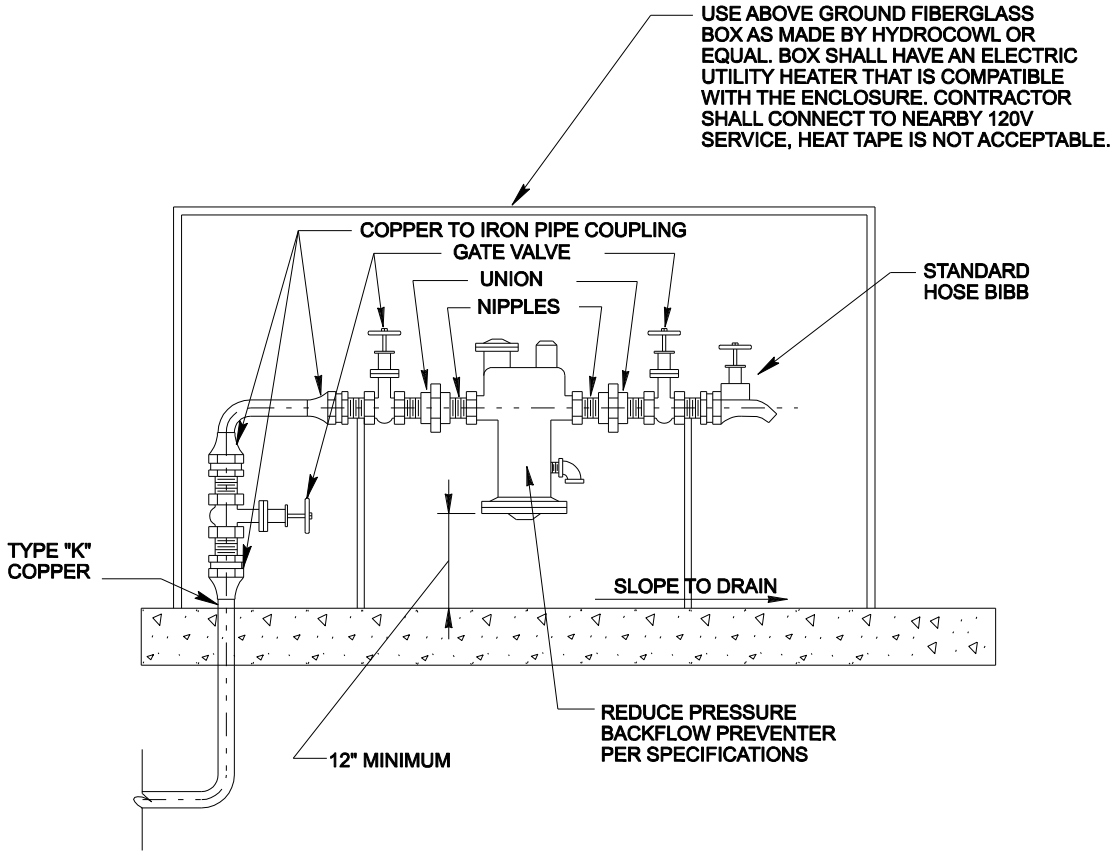

REDUCED PRESSURE BACKFLOW PREVENTER

NTS

2013

FORT CAMPBELL, KY
STANDARD DRAWINGS FOR WATER AND WASTEWATER CONSTRUCTION
FEBRUARY 2007

CH2MHILL

fc2013_05_01.dgn

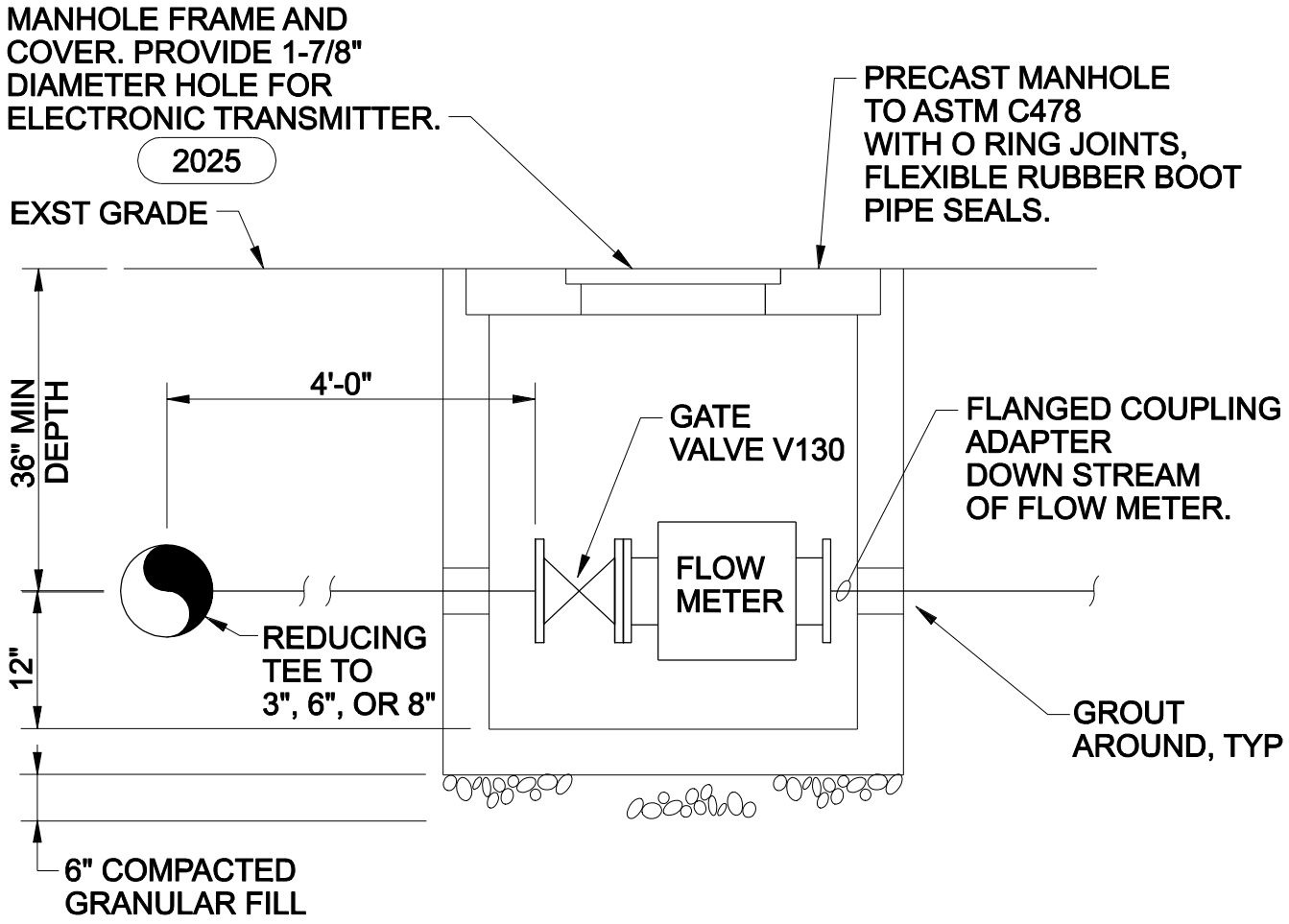

SECTION

3 INCH, 6 INCH AND 8 INCH METER BOX

NTS

2014

FORT CAMPBELL, KY
STANDARD DRAWINGS FOR WATER AND WASTEWATER CONSTRUCTION
FEBRUARY 2007

CH2MHILL

fc2014_05_01.dgn

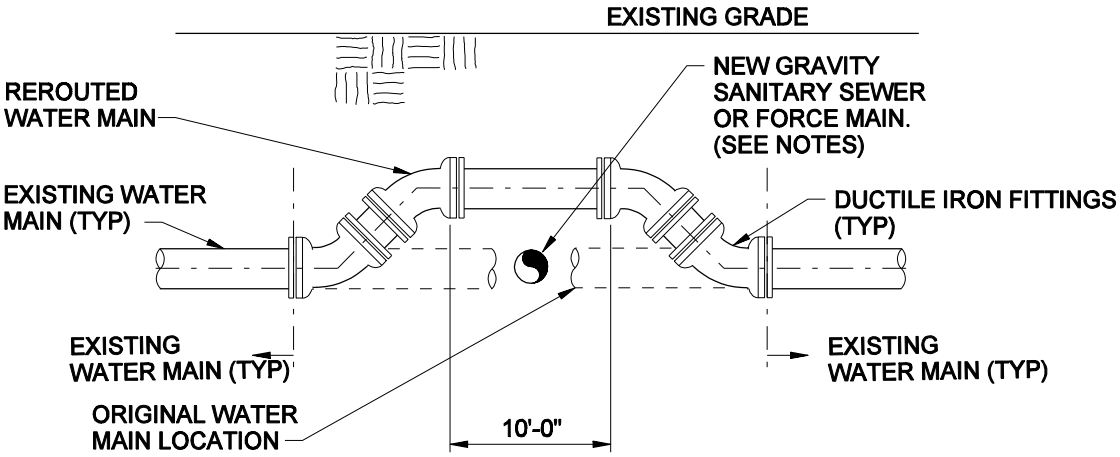

SECTION PERPENDICULAR TO SEWER AT SAME ELEVATION

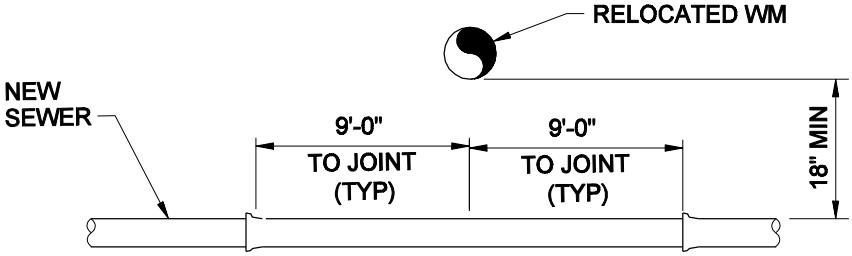

SECTION PERPENDICULAR TO SEWER SEWER BELOW WATER MAIN

NOTES:

1. WATER MAIN RELOCATION REQUIRED WHERE CONFLICT DISCOVERED WITH GRAVITY SEWER.
2. WHERE NO CONFLICT OCCURS BUT VERTICAL SEPARATION BETWEEN WATER AND SEWER IS LESS THAN 18" (OR WATER MAIN IS BELOW SEWER) , ENCASE BOTH LINES PER 2070 10 FEET EACH SIDE OF CROSSING.
3. WHERE CONFLICT OCCURS WITH NEW SANITARY FORCE MAIN, INSTALL FORCE MAIN A MINIMUM OF 24" BELOW WATER MAIN. (NO WATER MAIN RELOCATION REQUIRED)
4. CONTRACTOR TO EXCAVATE BEFORE ORDERING MATERIALS TO VERIFY LOCATION AND PIPING REQUIREMENTS FOR RELOCATION.
5. ALL FITTINGS SHALL BE RESTRAINED WITH THRUST BLOCKS PER 2005 .

WATER MAIN RELOCATION/WATER SERVICE CONFLICTS

NTS

2015

FORT CAMPBELL, KY
STANDARD DRAWINGS FOR WATER AND WASTEWATER CONSTRUCTION
FEBRUARY 2007

CH2MHILL

fc2015_05_01.dgn

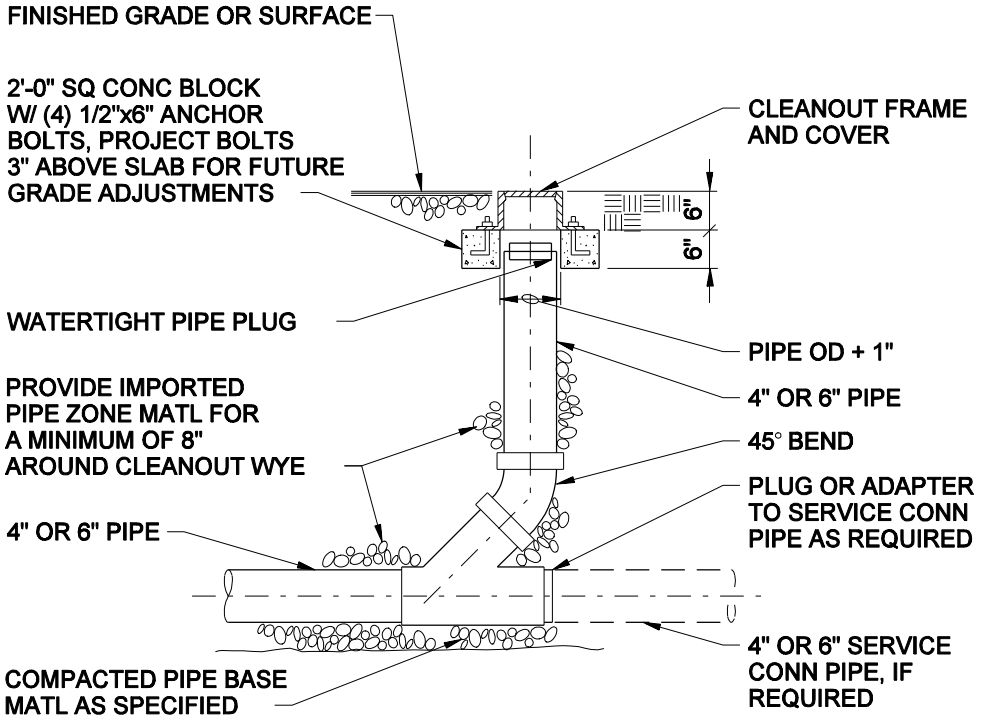

CLEANOUT

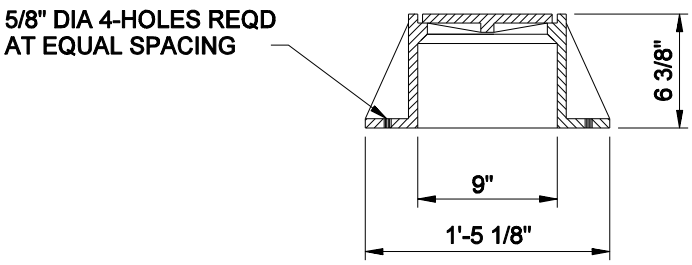

NOTES:

1. CLEANOUT SHALL BE PROVIDED 5'-0" OUTSIDE BUILDING AT POINT OF LATERAL CONNECTION.
2. ADDITIONAL CLEANOUTS SHALL BE PROVIDED IF THE DISTANCE BETWEEN THE SEWER MAIN AND THE BUILDING LINE IS MORE THAN 100 FEET. CLEANOUT SHALL BE LOCATED AT A POINT 75'-0" FROM THE SEWER MAIN.
3. CLEANOUT SHALL BE PROVIDED AT ALL CHANCES IN LATERAL ALIGNMENT.

CLEANOUT FRAME AND COVER

NTS

2020

FORT CAMPBELL, KY
STANDARD DRAWINGS FOR WATER AND WASTEWATER CONSTRUCTION
FEBRUARY 2007

CH2MHILL

fc2020_05_01.dgn

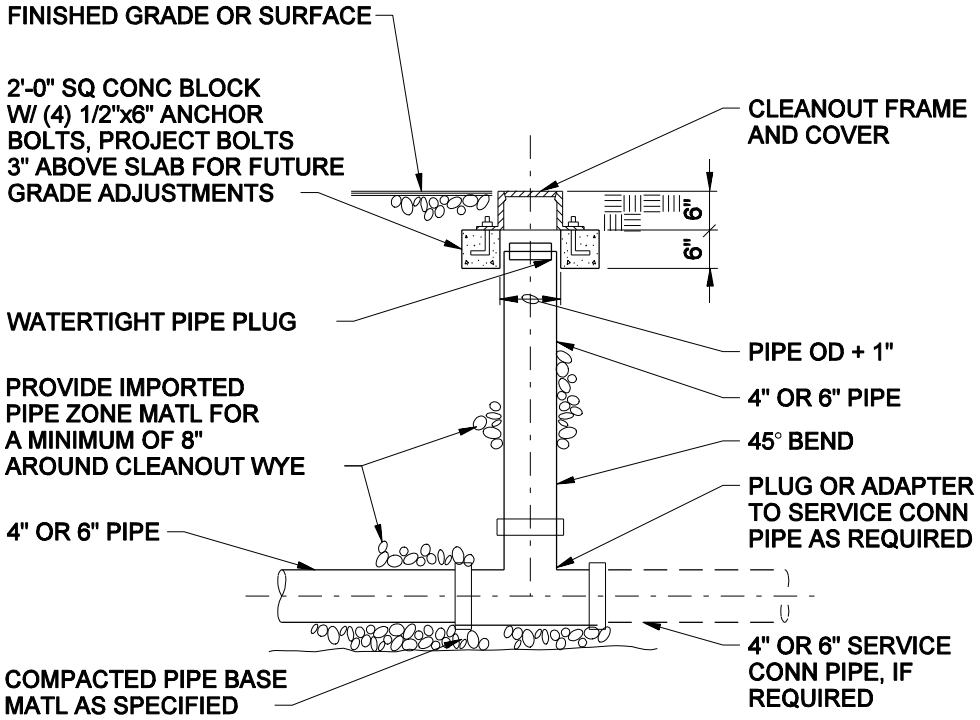

CLEANOUT

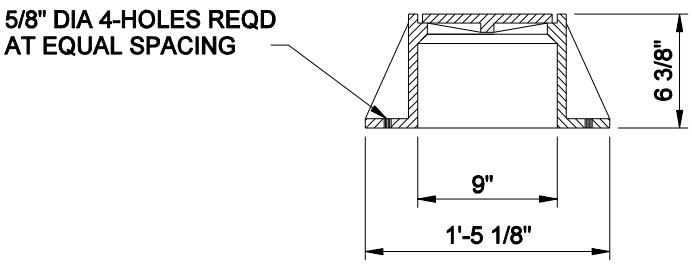

NOTES:

1. CLEANOUT SHALL BE PROVIDED 5'-0" OUTSIDE BUILDING AT POINT OF LATERAL CONNECTION.
2. ADDITIONAL CLEANOUTS SHALL BE PROVIDED IF THE DISTANCE BETWEEN THE SEWER MAIN AND THE BUILDING LINE IS MORE THAN 100 FEET. CLEANOUT SHALL BE LOCATED AT A POINT 75'-0" FROM THE SEWER MAIN.
3. CLEANOUT SHALL BE PROVIDED AT ALL CHANCES IN LATERAL ALIGNMENT.

2-WAY CLEANOUT FRAME AND COVER

NTS

2021

FORT CAMPBELL, KY
STANDARD DRAWINGS FOR WATER AND WASTEWATER CONSTRUCTION
FEBRUARY 2007

CH2MHILL

fc2021_05_01.dgn

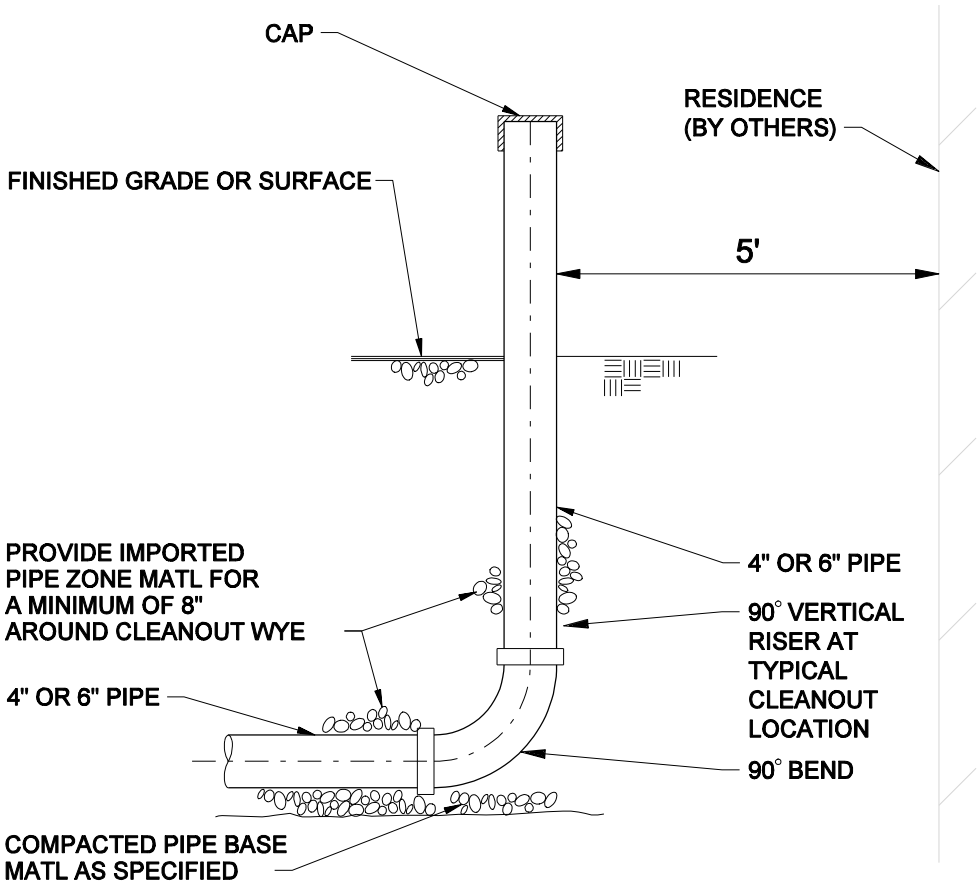

NOTES:
CLEANOUTS SHALL BE PROVIDED IF THE DISTANCE BETWEEN THE SEWER MAIN AND THE BUILDING LINE IS MORE THAN 100 FEET, AT A POINT 75 FEET FROM THE SEWER MAIN.
VERTICAL RISER AND 90 BEND TO BE REMOVED BY OTHERS AT TIME OF CLEANOUT INSTALLATION.

TEMPORARY TEST RISER AT CLEANOUT

NTS

2022

FORT CAMPBELL, KY
STANDARD DRAWINGS FOR WATER AND WASTEWATER CONSTRUCTION
FEBRUARY 2007

CH2MHILL

fc2022_05_01.dgn

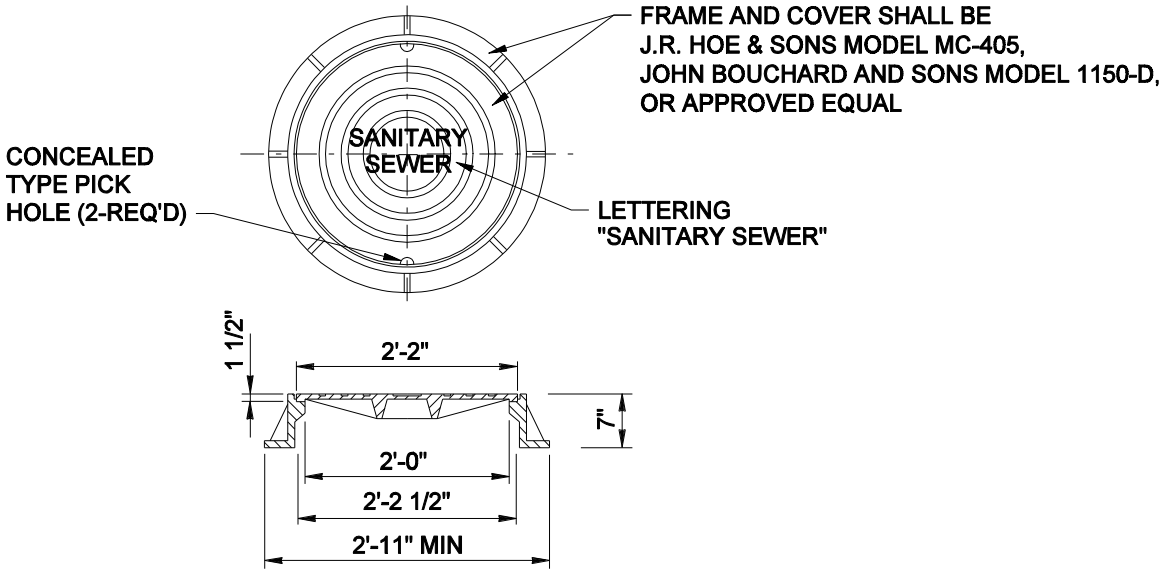

STANDARD MANHOLE FRAME AND COVER

NTS

2025

FORT CAMPBELL, KY
STANDARD DRAWINGS FOR WATER AND
WASTEWATER CONSTRUCTION
FEBRUARY 2007

CH2MHILL

fc2025_05_01.dgn

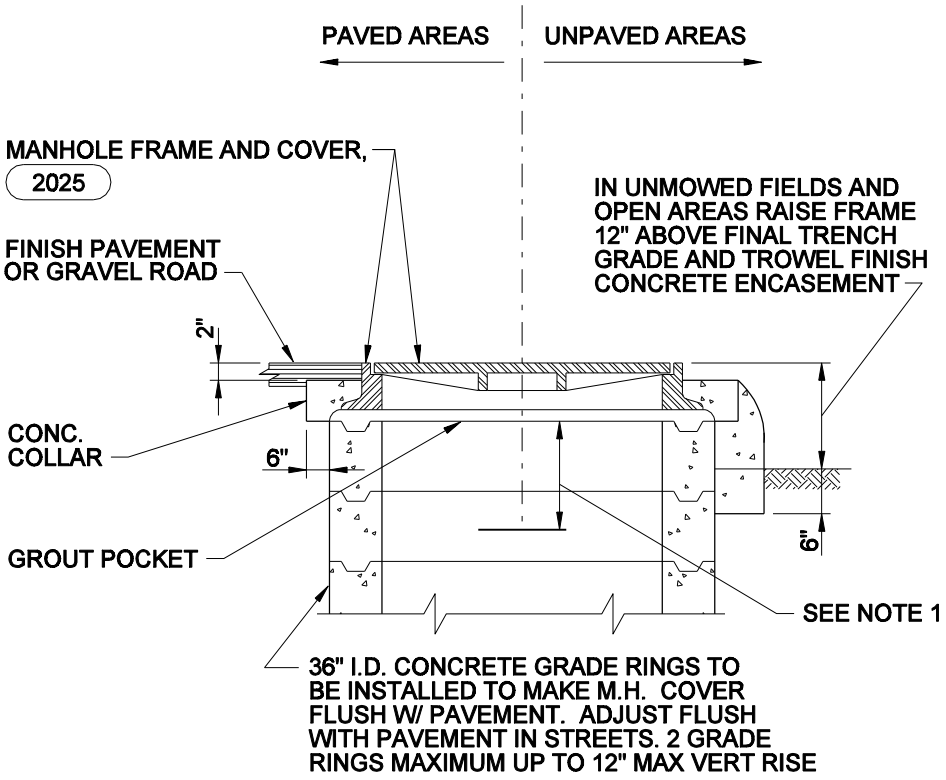

SECTION

NOTE:

1. PROVIDE POLYPROPYLENE-ENCASED STEEL MANHOLE STEPS AT 16 INCHES CENTER TO CENTER. TOP STEP SHALL BE WITHIN 24 INCHES OF THE TOP OF FINISHED MANHOLE FRAME

MANHOLE FRAME AND COVER SETTING WITH GRADE EXTENSION

NTS

2030

FORT CAMPBELL, KY
STANDARD DRAWINGS FOR WATER AND
WASTEWATER CONSTRUCTION
FEBRUARY 2007

CH2MHILL

fc2030_05_01.dgn

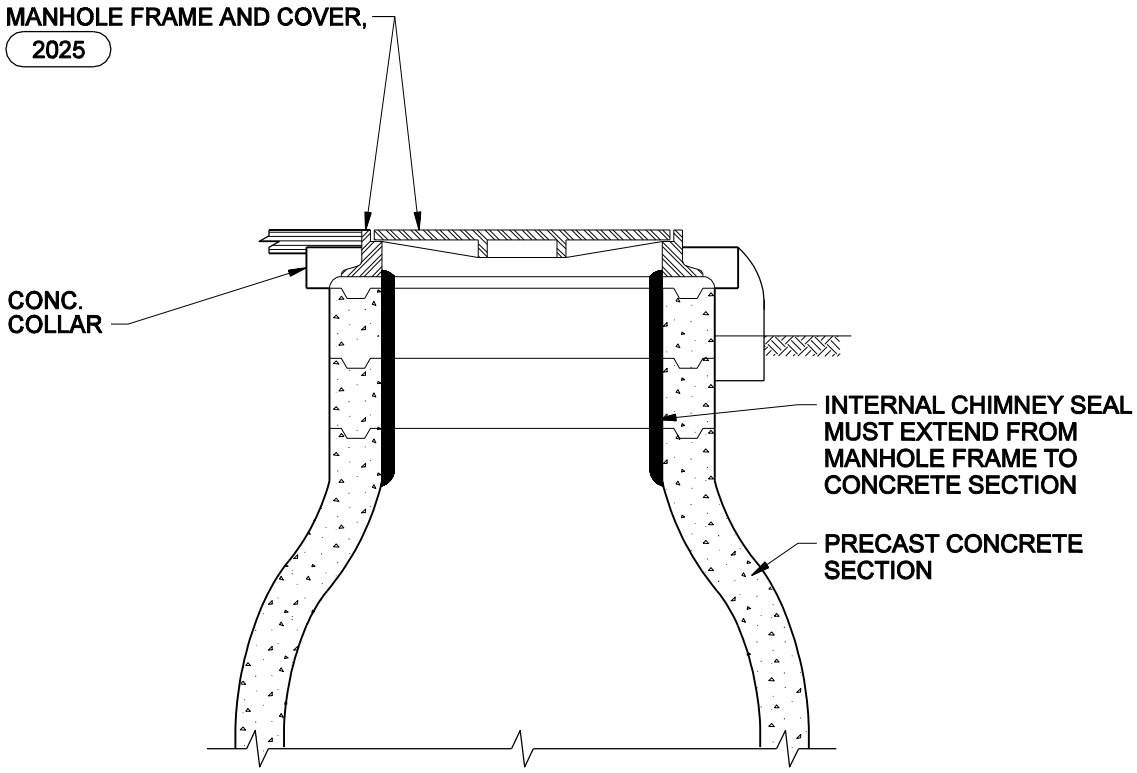

SECTION

MANHOLE CHIMNEY SEAL

NTS

2031

FORT CAMPBELL, KY
STANDARD DRAWINGS FOR WATER AND
WASTEWATER CONSTRUCTION
FEBRUARY 2007

CH2MHILL

fc2031_05_01.dgn

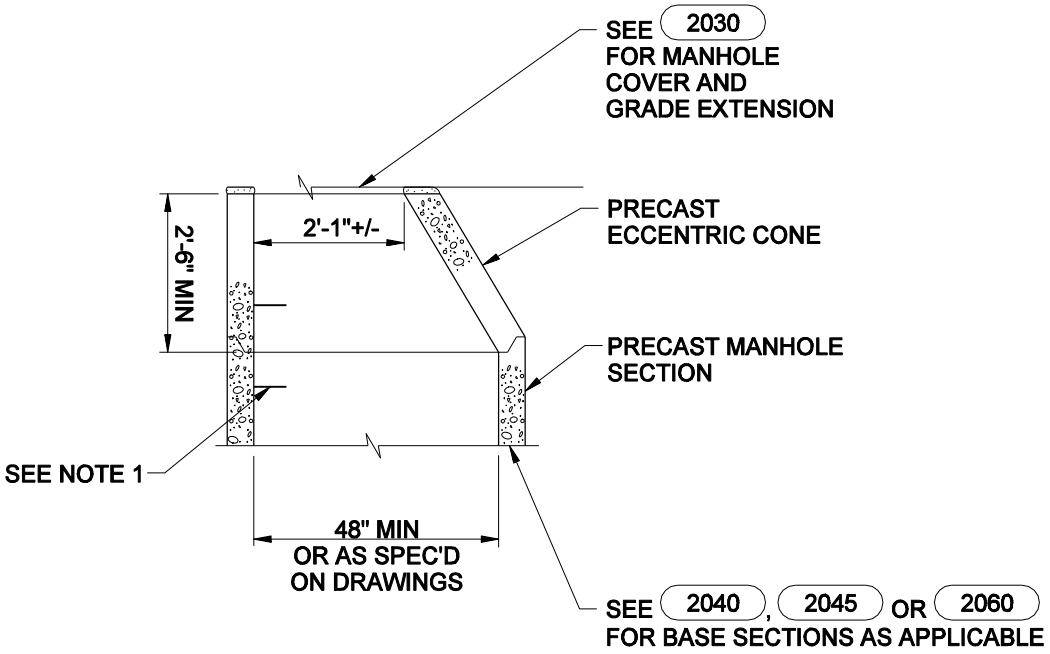

NOTE:

1. PROVIDE POLYPROPYLENE-ENCASED STEEL MANHOLE STEPS AT 16 INCHES CENTER TO CENTER. TOP STEP SHALL BE WITHIN 2'-0" OF THE TOP OF FINISHED MANHOLE FRAME.

MANHOLE TOP SECTION

NTS

2035

FORT CAMPBELL, KY
STANDARD DRAWINGS FOR WATER AND
WASTEWATER CONSTRUCTION
FEBRUARY 2007

CH2MHILL

fc2035_05_01.dgn

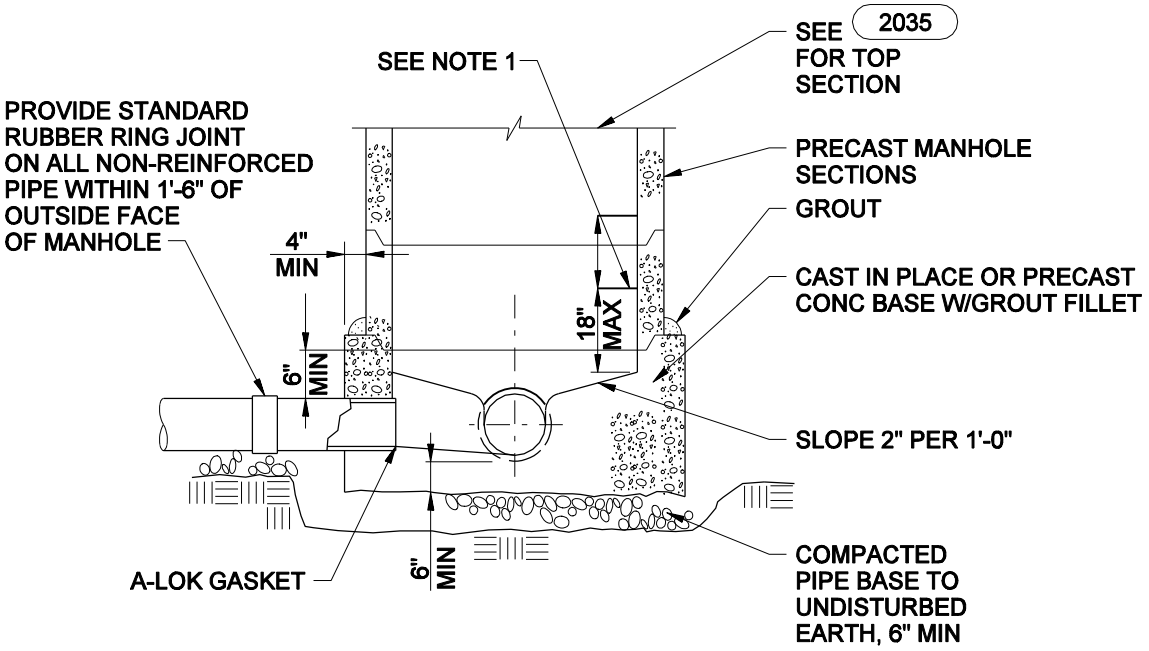

NOTE:

1. PROVIDE POLYPROPYLENE-ENCASED STEEL MANHOLE STEPS AT 16 INCHES CENTER TO CENTER. BOTTOM STEP SHALL BE NO HIGHER THAN 18" ABOVE MANHOLE BASE FILLET.

MANHOLE BASE SECTION

NTS

2040

FORT CAMPBELL, KY
STANDARD DRAWINGS FOR WATER AND WASTEWATER CONSTRUCTION
FEBRUARY 2007

CH2MHILL

fc2040_05_01.dgn

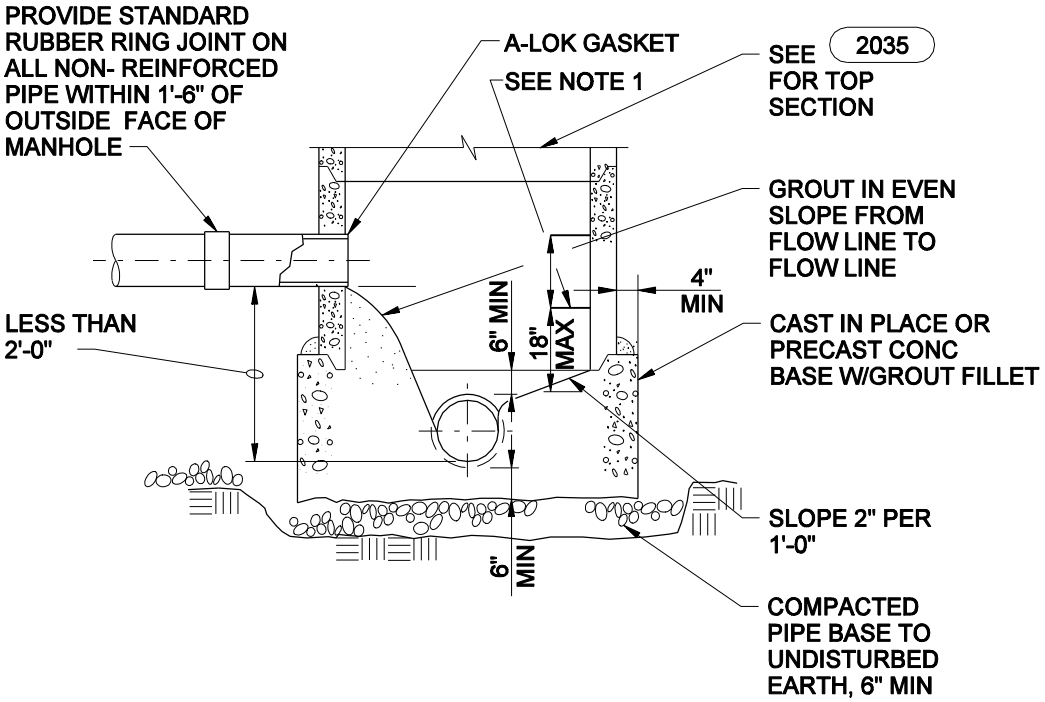

NOTE:

1. PROVIDE POLYPROPYLENE-ENCASED STEEL MANHOLE STEPS AT 16 INCHES CENTER TO CENTER. BOTTOM STEP SHALL BE NO HIGHER THAN 18" ABOVE MANHOLE BASE FILLET.

MANHOLE BASE SECTION (WITH PIPE DROP LESS THAN 2'-0")

NTS

2045

FORT CAMPBELL, KY
STANDARD DRAWINGS FOR WATER AND WASTEWATER CONSTRUCTION
FEBRUARY 2007

CH2MHILL

fc2045_05_01.dgn

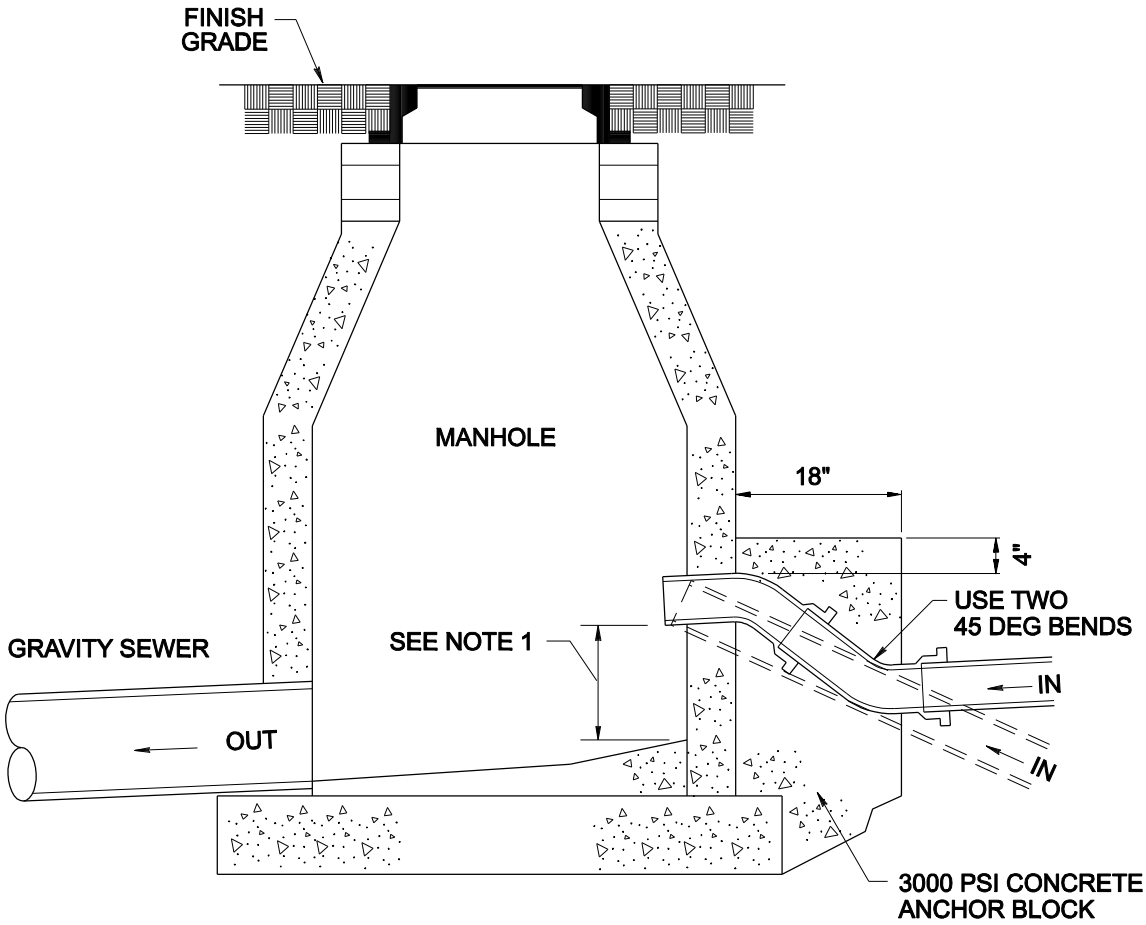

NOTE:

1. ENTER WALL APPROXIMATELY 1'-0" ABOVE CHANNEL IN FLOOR OF MANHOLE.

STANDARD CONNECTION OF FORCE MAIN TO MANHOLE

NTS

2046

FORT CAMPBELL, KY
STANDARD DRAWINGS FOR WATER AND
WASTEWATER CONSTRUCTION
FEBRUARY 2007

CH2MHILL

fc2046_05_01.dgn

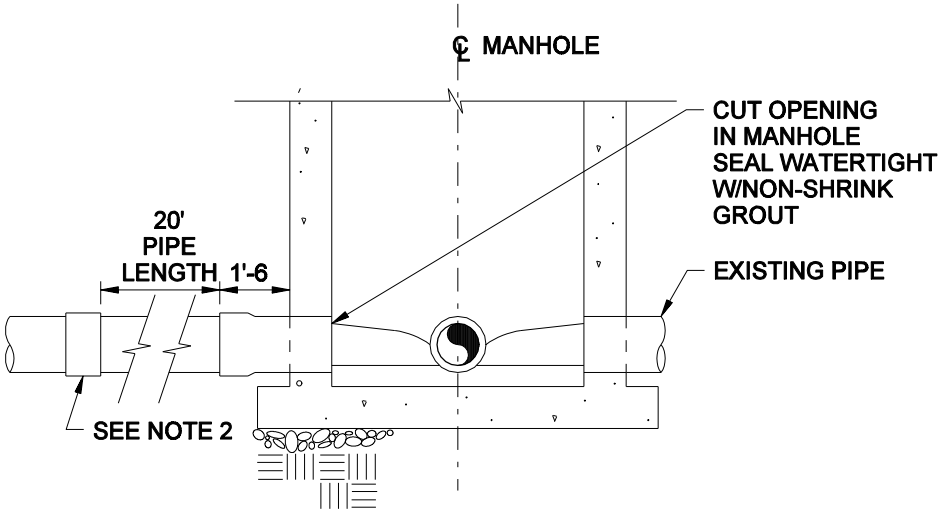

NOTES:

1. SEE 2035 FOR TOP SECTION OF MANHOLE
2. PROVIDE STANDARD RUBBER RING JOINT ON ALL NON-REINFORCED PIPES.

PIPE CONNECTIONS TO EXISTING MANHOLES

NTS

2050

FORT CAMPBELL, KY
STANDARD DRAWINGS FOR WATER AND WASTEWATER CONSTRUCTION
FEBRUARY 2007

CH2MHILL

fc2050_05_01.dgn

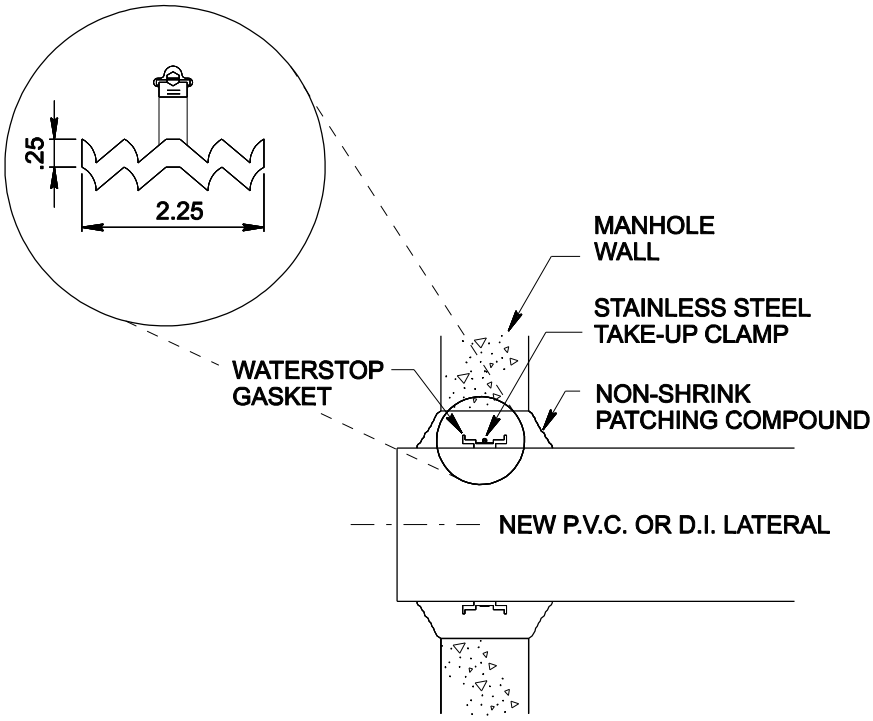

EXISTING TIE-IN IN
REPLACEMENT

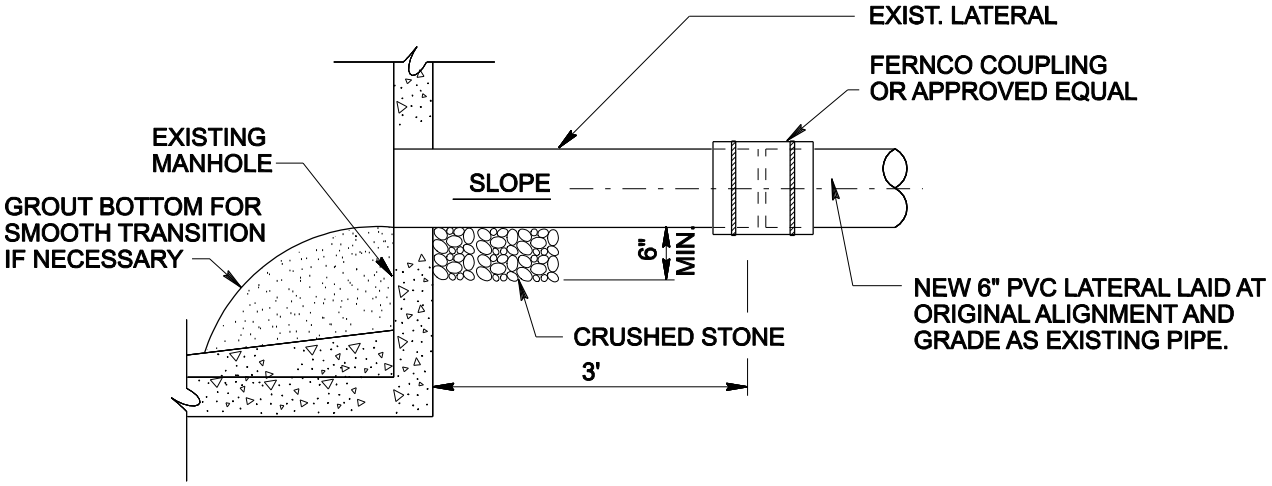

EXISTING TIE-IN IN
GOOD CONDITION

EXISTING MANHOLE TIE-IN REPLACEMENT

NTS

2051

FORT CAMPBELL, KY
STANDARD DRAWINGS FOR WATER AND
WASTEWATER CONSTRUCTION
FEBRUARY 2007

CH2MHILL

fc2051_05_01.dgn

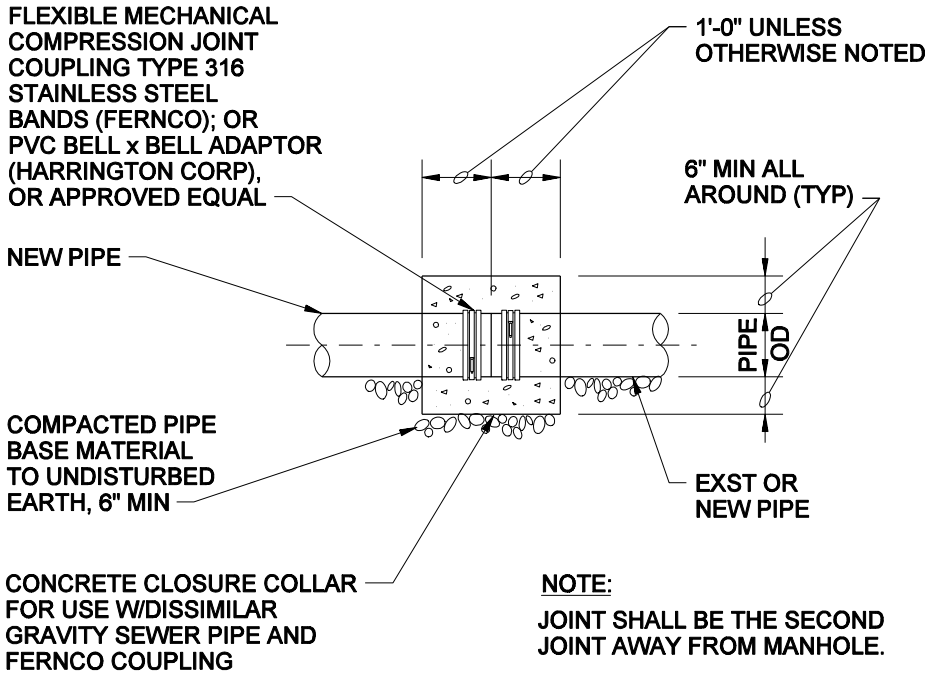

NOTE:

JOINT SHALL BE THE SECOND JOINT AWAY FROM MANHOLE.

JOINT FOR DISSIMILAR GRAVITY SEWER PIPE

NTS

2052

FORT CAMPBELL, KY
STANDARD DRAWINGS FOR WATER AND WASTEWATER CONSTRUCTION
FEBRUARY 2007

CH2MHILL

fc2052_05_01.dgn

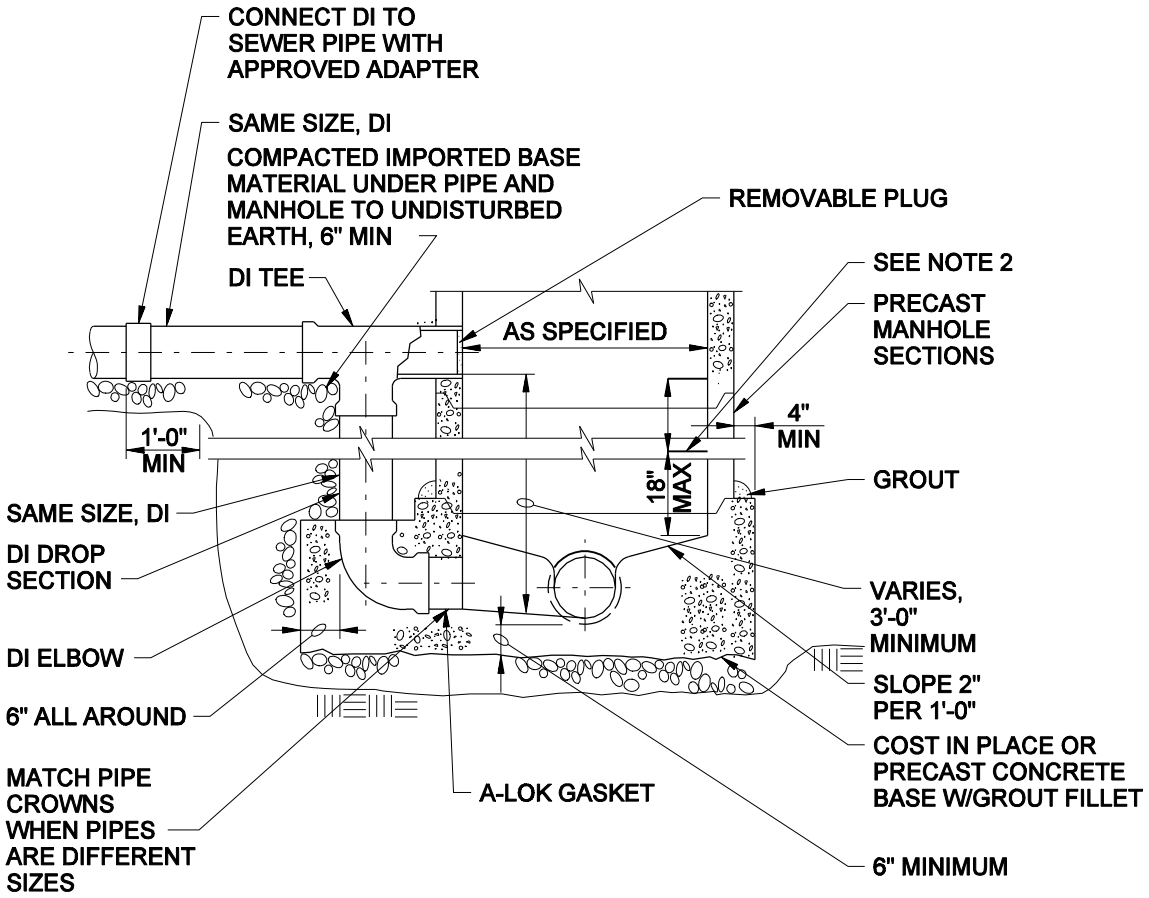

NOTES:

1. SEE 2035 FOR TOP SECTION OF MANHOLE.
2. PROVIDE POLYPROPYLENE-ENCASED STEEL MANHOLE STEPS AT 16 INCHES CENTER TO CENTER. BOTTOM STEP SHALL BE NO HIGHER THAN 18" ABOVE MANHOLE BASE FILLET.
3. DUCTILE IRON (DI) PIPE AND FITTINGS REQUIRED FOR DROP AND TEE TO ALLOW FOR FUTURE CLEANING WITHOUT DAMAGING PIPE.

MANHOLE BASE SECTION (WITH DROP ASSEMBLY FOR >2'-0" DROP)

NTS

2060

FORT CAMPBELL, KY
STANDARD DRAWINGS FOR WATER AND WASTEWATER CONSTRUCTION
FEBRUARY 2007

CH2MHILL

fc2060_05_01.dgn

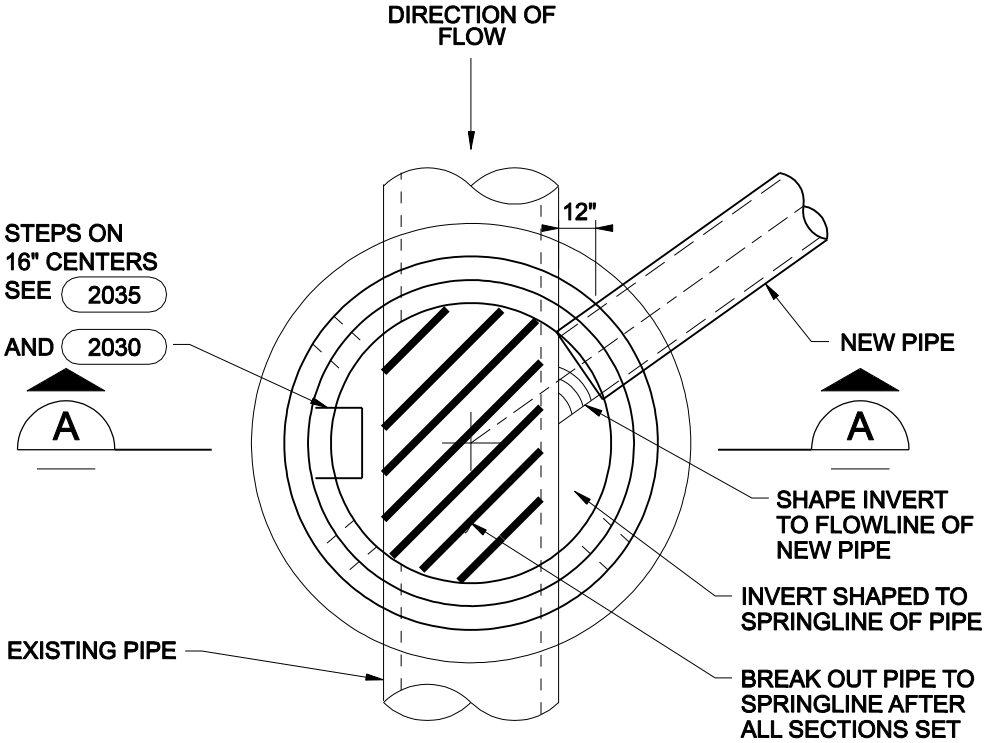

PLAN

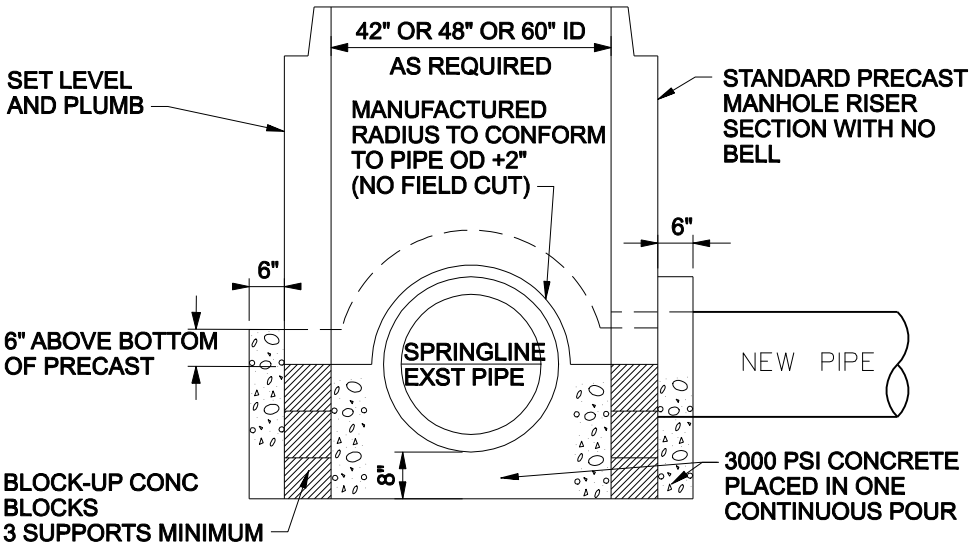

SECTION A-A

MANHOLE BASE SECTION WITH CONTINUOUS FLOW

NTS

2061

FORT CAMPBELL, KY
STANDARD DRAWINGS FOR WATER AND WASTEWATER CONSTRUCTION
FEBRUARY 2007

CH2MHILL

fc2061_05_01.dgn

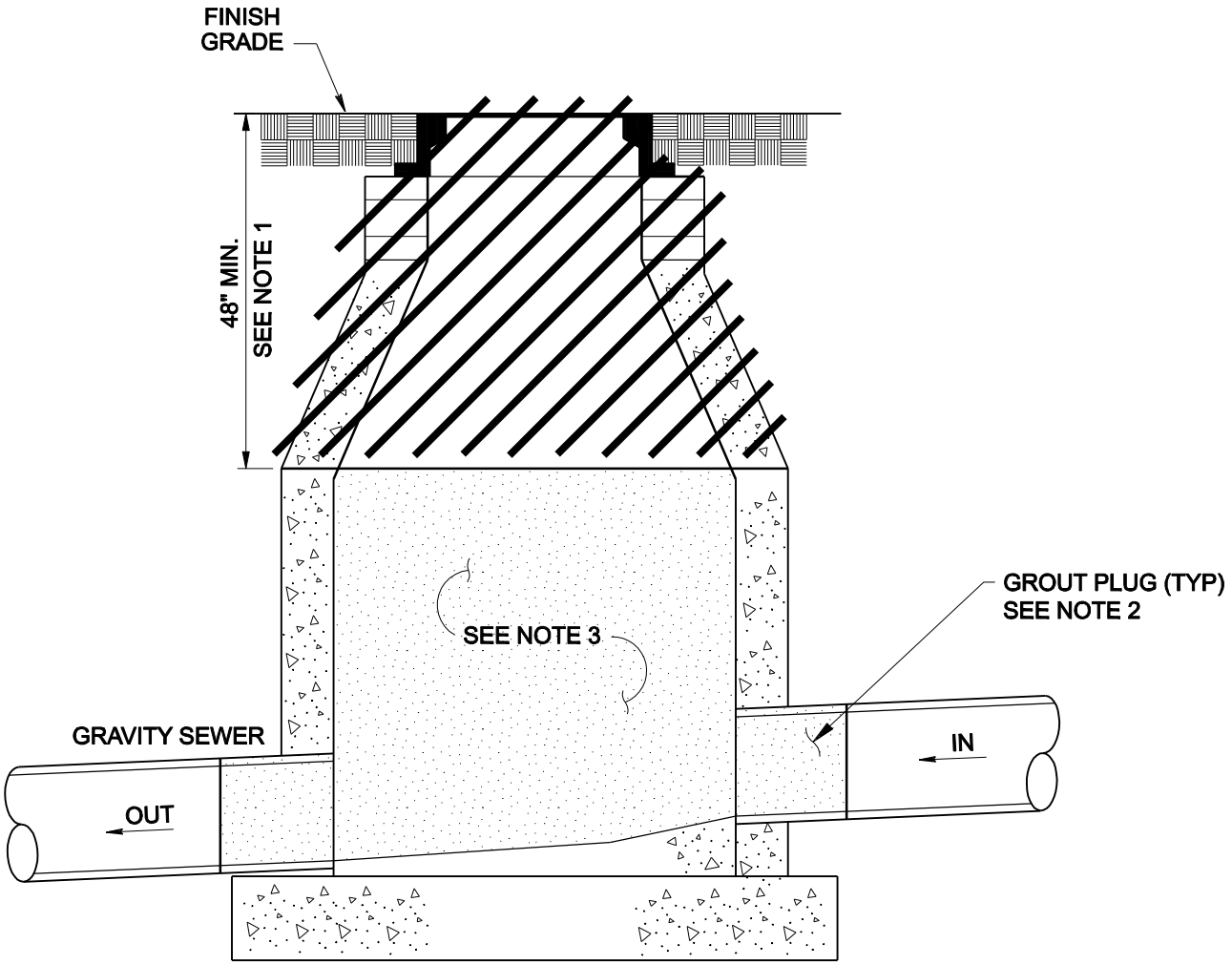

NOTES:

1. REMOVE TOP SECTION(S), FRAME AND COVER, AND GRADE RINGS TO A POINT NO LESS THAN 48" BELOW FINISH GRADE, OR TO THE FIRST JOINT BELOW THE CONE, WHICHEVER IS GREATER.

2. PROVIDE 24" - LONG, GROUT OR PREFORMED PLUG FOR ALL PIPE PENETRATIONS.

3. FOLLOWING GROUT PLUG INSTALLATION AND CURING, BACKFILL ENTIRE REMAINING DEPTH OF MANHOLE WITH COMPACTED CLASS D BACKFILL OR FLOWABLE FILL, AT THE CONTRACTORS OPTION.

4. BACKFILL WITH CLASS A OR CLASS D BACKTILL TO FINISH GRADE FOLLOWING FILL PROCEDURES, AS APPLICABLE

ABANDONING MANHOLES AND SEWERS

NTS

2062

FORT CAMPBELL, KY
STANDARD DRAWINGS FOR WATER AND WASTEWATER CONSTRUCTION
FEBRUARY 2007

CH2MHILL

fc2062_05_01.dgn

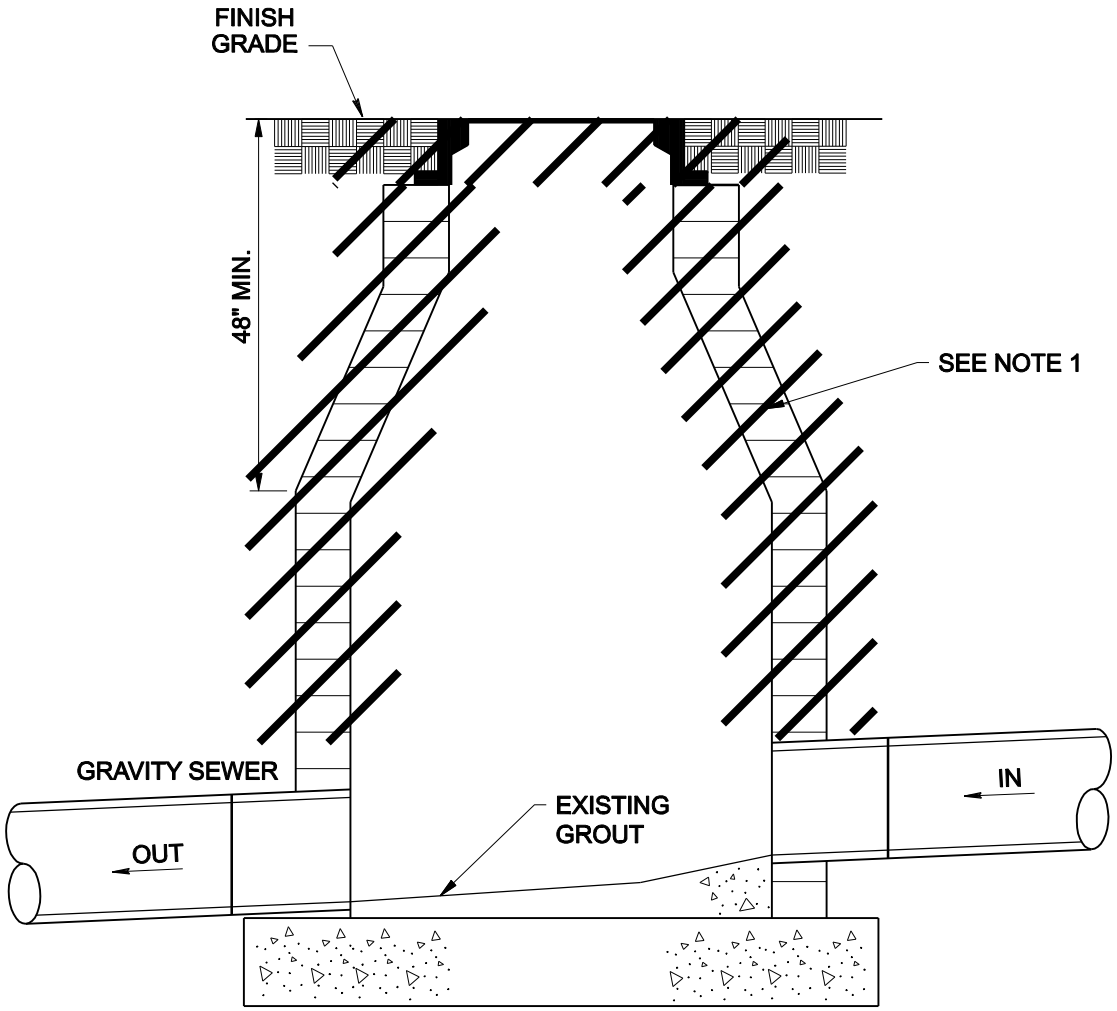

NOTES:

1. REMOVE EXISTING BRICK DOWN TO TOP OF PIPE. REMAINING BASE SHALL RESEMBLE A PRECAST BASE SECTION, SUCH AS 2040 .
2. CH2M HILL SHALL APPROVE RE-USE OF EXISTING MANHOLE BASE.
3. RECONSTRUCT MANHOLE USING PRECAST MANHOLE SECTIONS IN SIMILAR METHOD AS SHOWN ON 2040 , "WET SETTING" THE FIRST MANHOLE SECTION WITH GROUT TO EXISTING BASE.
4. FRAME AND COVER SHALL NOT BE REUSED. CH2M HILL SHALL HAVE OPTION AT POSSESSION OF EXISTING FRAME AND COVER.

BRICK MANHOLE REHABILITATION

NTS

2063

FORT CAMPBELL, KY
STANDARD DRAWINGS FOR WATER AND
WASTEWATER CONSTRUCTION
FEBRUARY 2007

CH2MHILL

fc2063_05_01.dgn

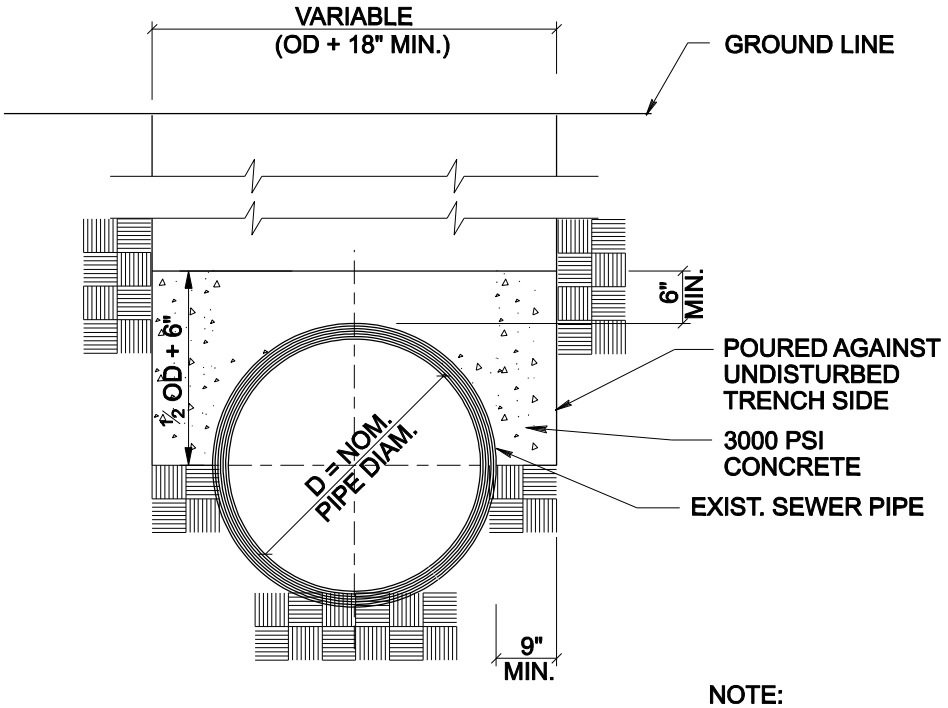

TYPICAL CONCRETE
PROTECTION FOR EXISTING SEWERS

NOTE:
3000 PSI CONCRETE TO BE POURED 16 HOURS BEFORE BACKFILL IS PLACED AND IN SUCH A MANNER AS TO PREVENT PIPE FROM FLOATING

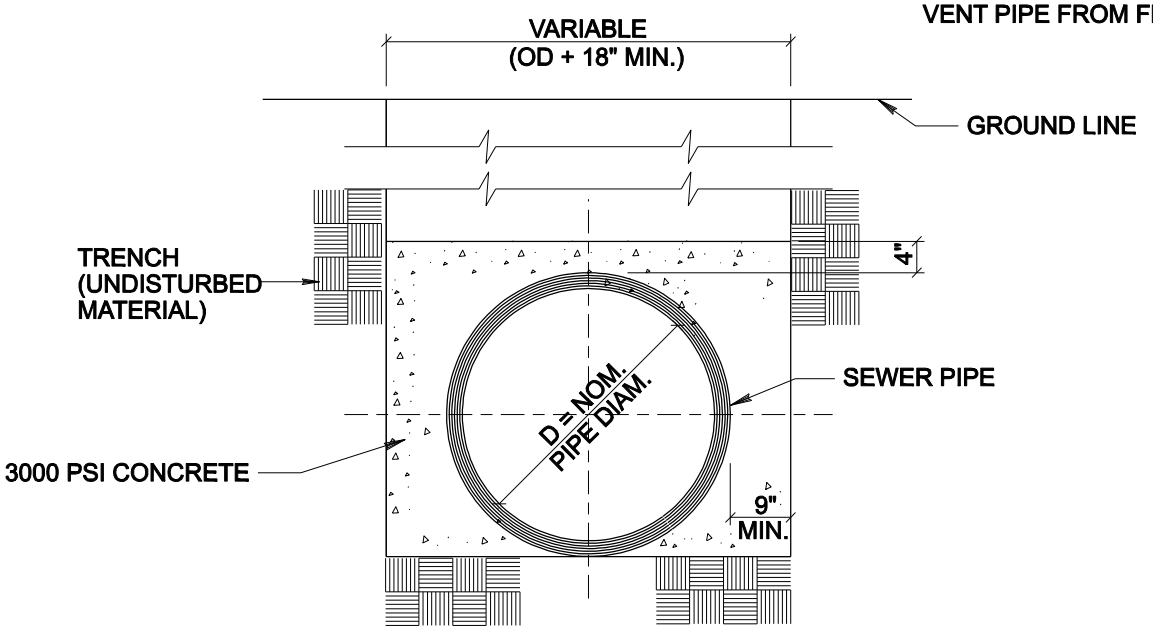

TYPICAL CONCRETE
PROTECTION FOR NEW SEWERS

CONCRETE PROTECTION

NTS

2070

FORT CAMPBELL, KY
STANDARD DRAWINGS FOR WATER AND WASTEWATER CONSTRUCTION
FEBRUARY 2007

CH2MHILL

fc2070_05_01.dgn

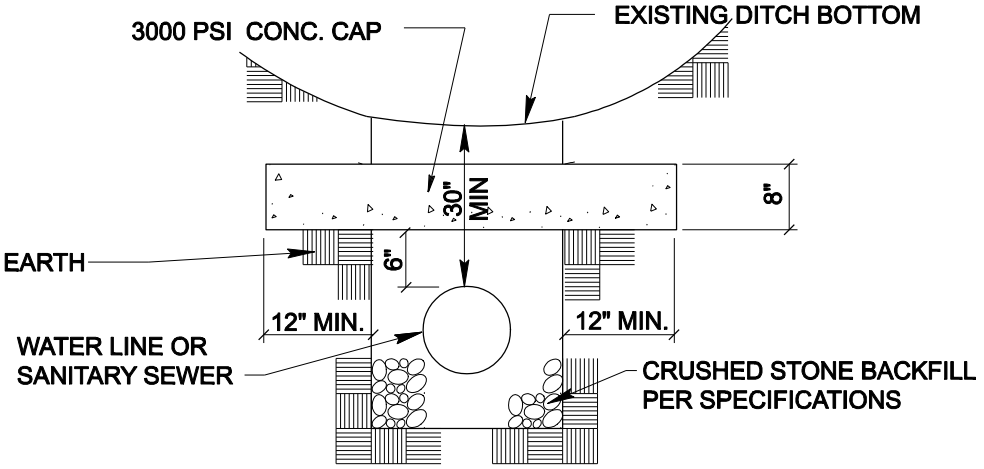

EARTH EXCAVATION

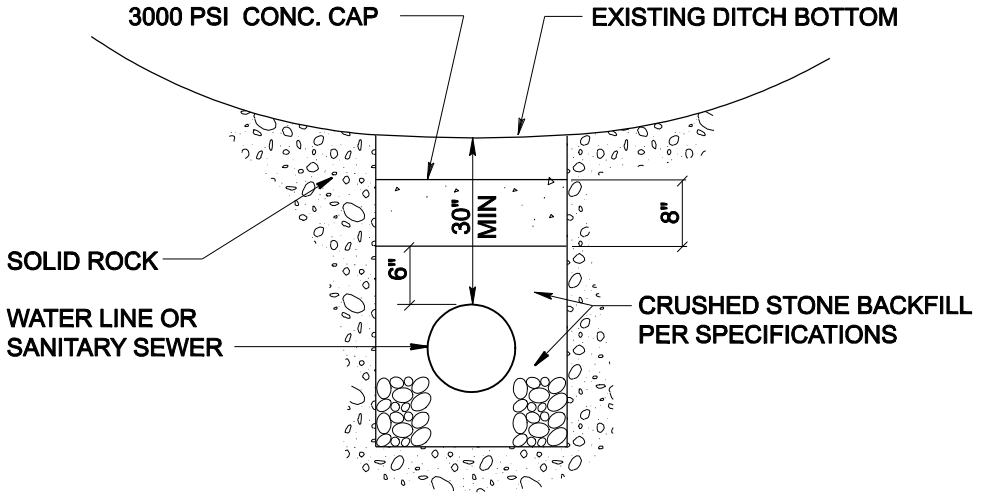

ROCK EXCAVATION

CONCRETE CAP

NTS

2071

FORT CAMPBELL, KY
STANDARD DRAWINGS FOR WATER AND
WASTEWATER CONSTRUCTION
FEBRUARY 2007

CH2MHILL

fc2071_05_01.dgn

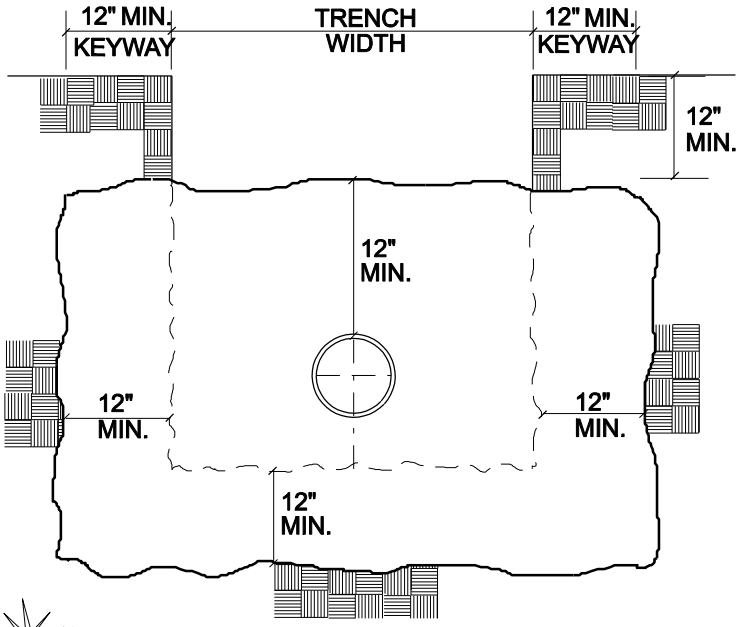

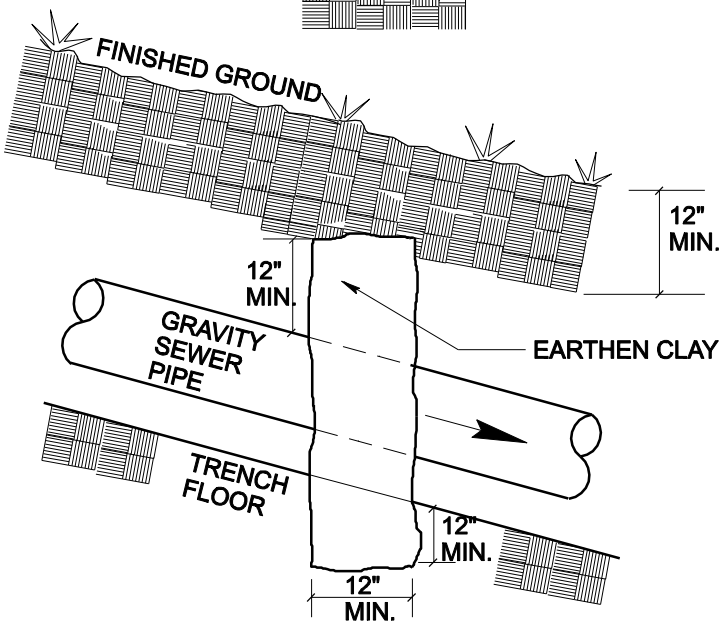

NOTE:
PROVIDE CHECK DAMS AT 100' CENTER TO CENTER ON GRADES BETWEEN 2% AND 20%. FOR GRADES STEEPER THAN 20%, USE CONCRETE ANCHORS PER 2076.

CHECK DAM FOR GRAVITY SEWER

NTS

2074

FORT CAMPBELL, KY
STANDARD DRAWINGS FOR WATER AND WASTEWATER CONSTRUCTION
FEBRUARY 2007

CH2MHILL

fc2074_05_01.dgn

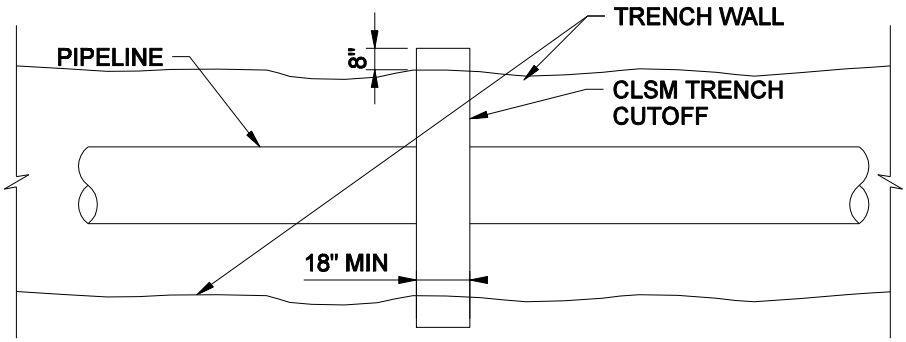

PLAN

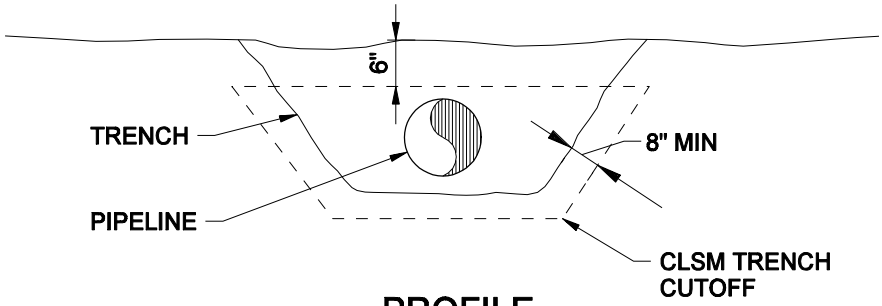

PROFILE

NOTES:

1. INSTALL CONCRETE TRENCH CUTOFFS MAXIMUM OF 100' CENTER TO CENTER WHERE SHOWN ON DRAWINGS. FIRST CUTOFF TO BEGIN ON TOP OF SLOPE.

2. CONTROLLED, LOW-STRENGTH MATERIAL (CLSM), OR FLOWABLEFILL AS SPECIFIED.

TRENCH CUTOFF

NTS

2075

FORT CAMPBELL, KY
STANDARD DRAWINGS FOR WATER AND WASTEWATER CONSTRUCTION
FEBRUARY 2007

CH2MHILL

fc2075_05_01.dgn

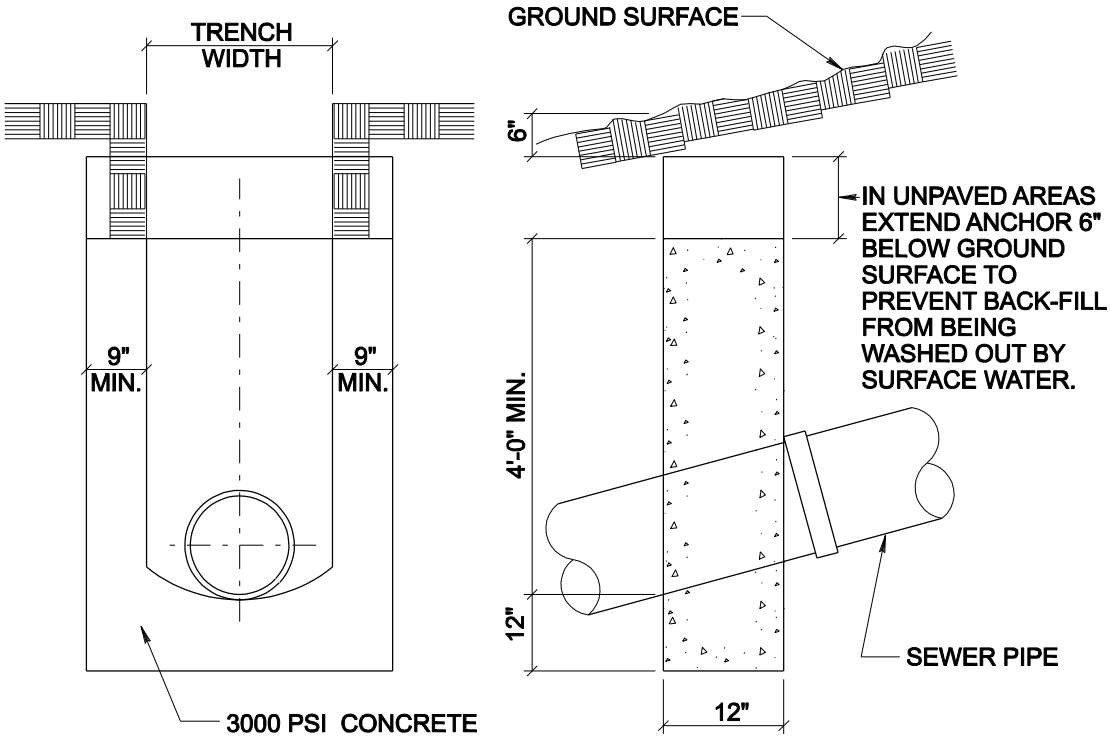

PROVIDE NO ANCHORS ON GRADES LESS THAN 20% UNLESS NOTED.

PROVIDE ANCHOR 36' CENTER TO CENTER ON GRADES BETWEEN 20% & 34%.

PROVIDE ANCHOR 24' CENTER TO CENTER ON GRADES BETWEEN 34% & 50%.

PROVIDE ANCHOR 16' CENTER TO CENTER ON GRADES BETWEEN 50% & 70%.

CONTRACTOR MAY SUBMIT ALTERNATE DESIGN UTILIZING ROCK BOLTS TO KEY ANCHOR TO ROCK TRENCH.

FOR CONDITIONS OTHER THAN SHOWN HEREON ANCHORS SHALL BE PROVIDED AS REQUIRED BY THE CONTRACT PLANS OR ORDERED BY THE ENGINEER.

CONCRETE ANCHORS FOR SEWERS ON STEEP GRADES

NTS

2076

FORT CAMPBELL, KY
STANDARD DRAWINGS FOR WATER AND WASTEWATER CONSTRUCTION
FEBRUARY 2007

CH2MHILL

fc2076_05_01.dgn

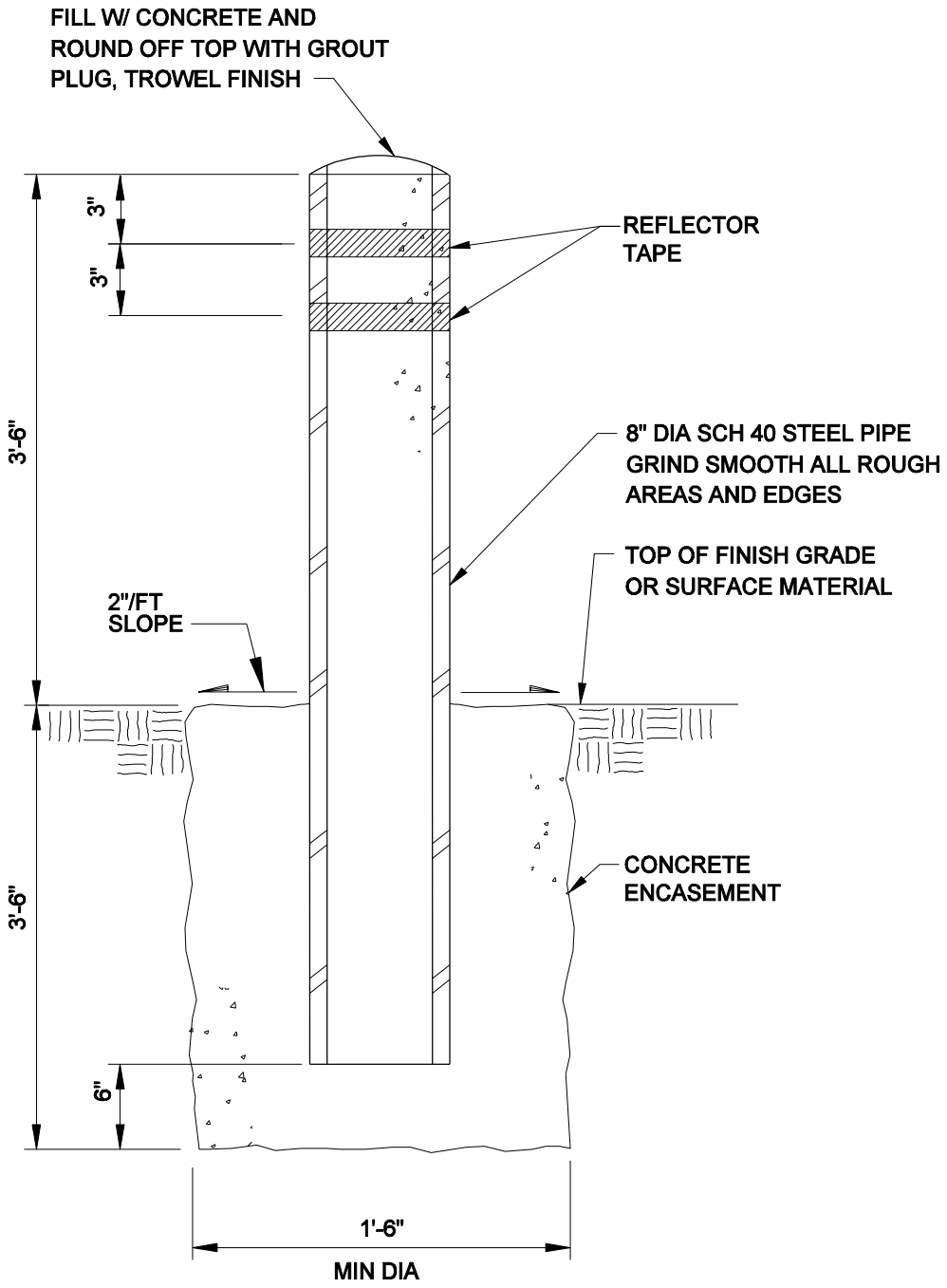

NOTES:

1. EPOXY PAINT PIPE "SAFETY YELLOW" AFTER INSTALLATION.
2. WRAP PIPE WITH 2 BANDS OF 2" WIDE WHITE REFLECTOR TAPE AFTER PAINTING.

GUARD POST

NTS

2080

FORT CAMPBELL, KY
STANDARD DRAWINGS FOR WATER AND
WASTEWATER CONSTRUCTION
FEBRUARY 2007

CH2MHILL

fc2080_05_01.dgn

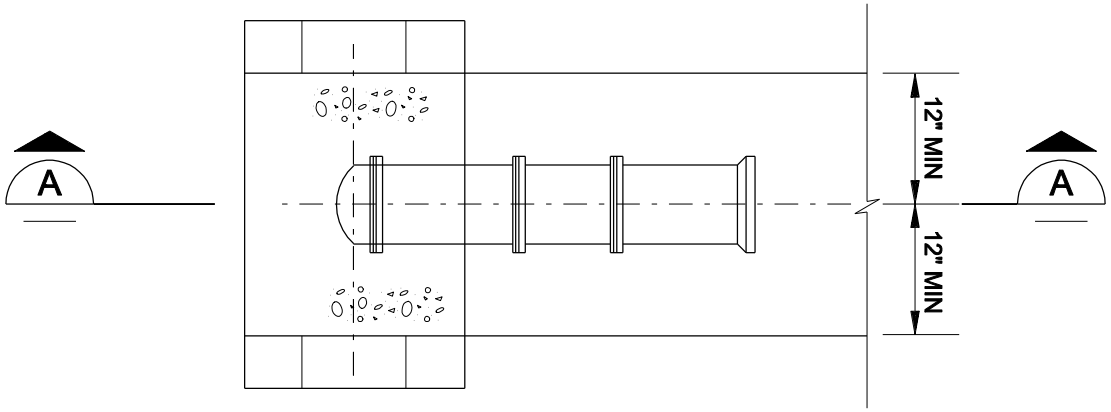

PLAN

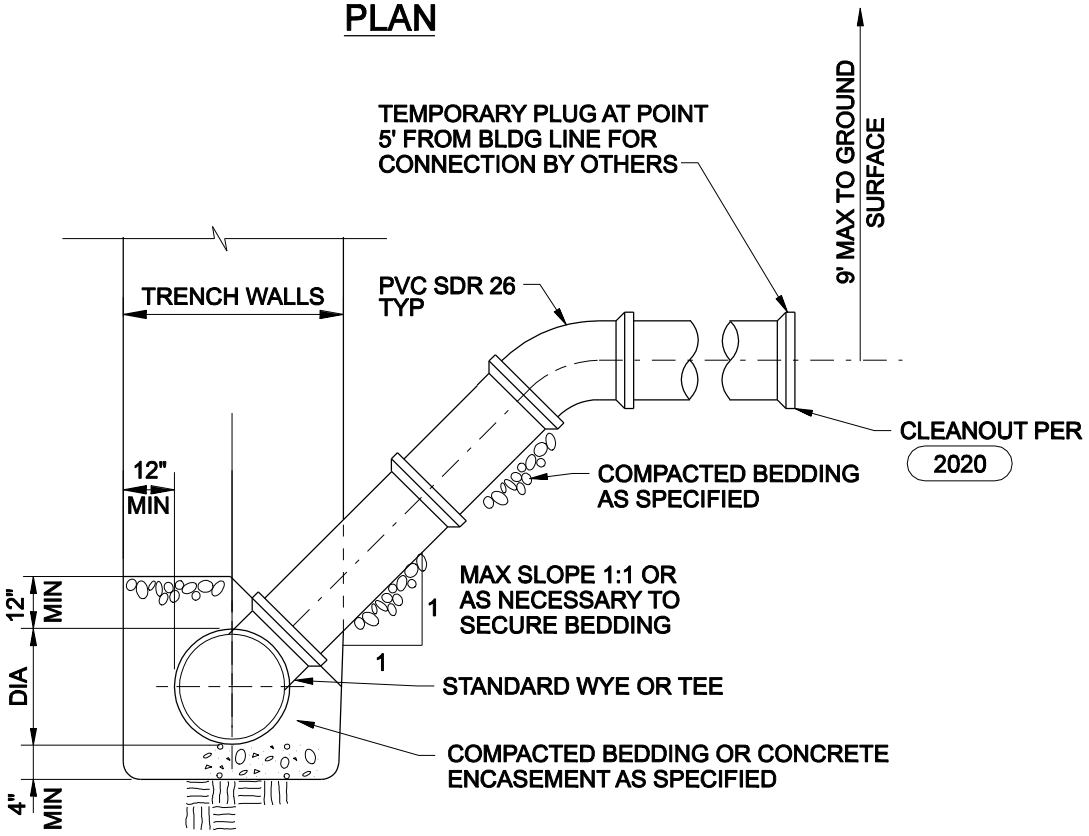

SECTION A-A

SANITARY SEWER SERVICE CONNECTION

NTS

2081

FORT CAMPBELL, KY
STANDARD DRAWINGS FOR WATER AND
WASTEWATER CONSTRUCTION
FEBRUARY 2007

CH2MHILL

fc2081_05_01.dgn

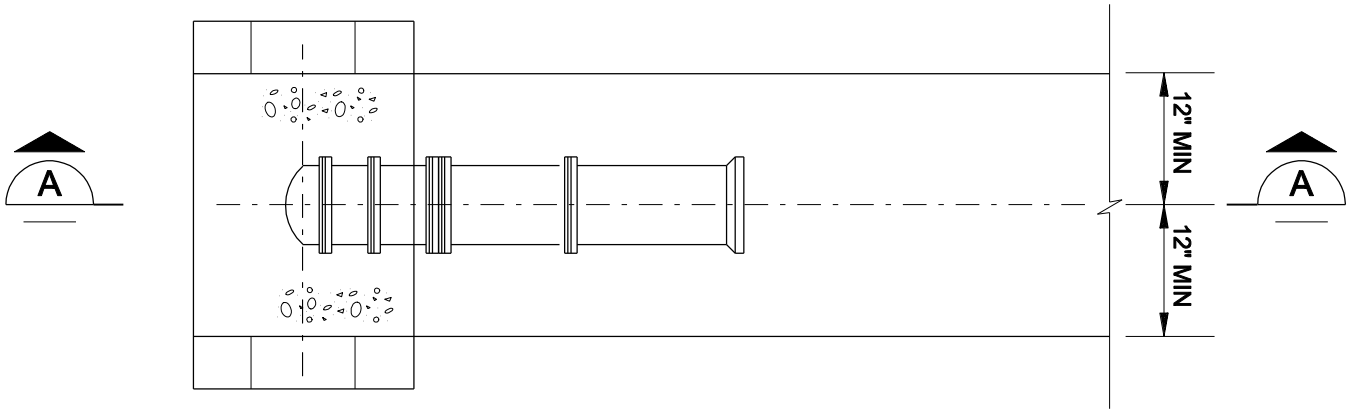

PLAN

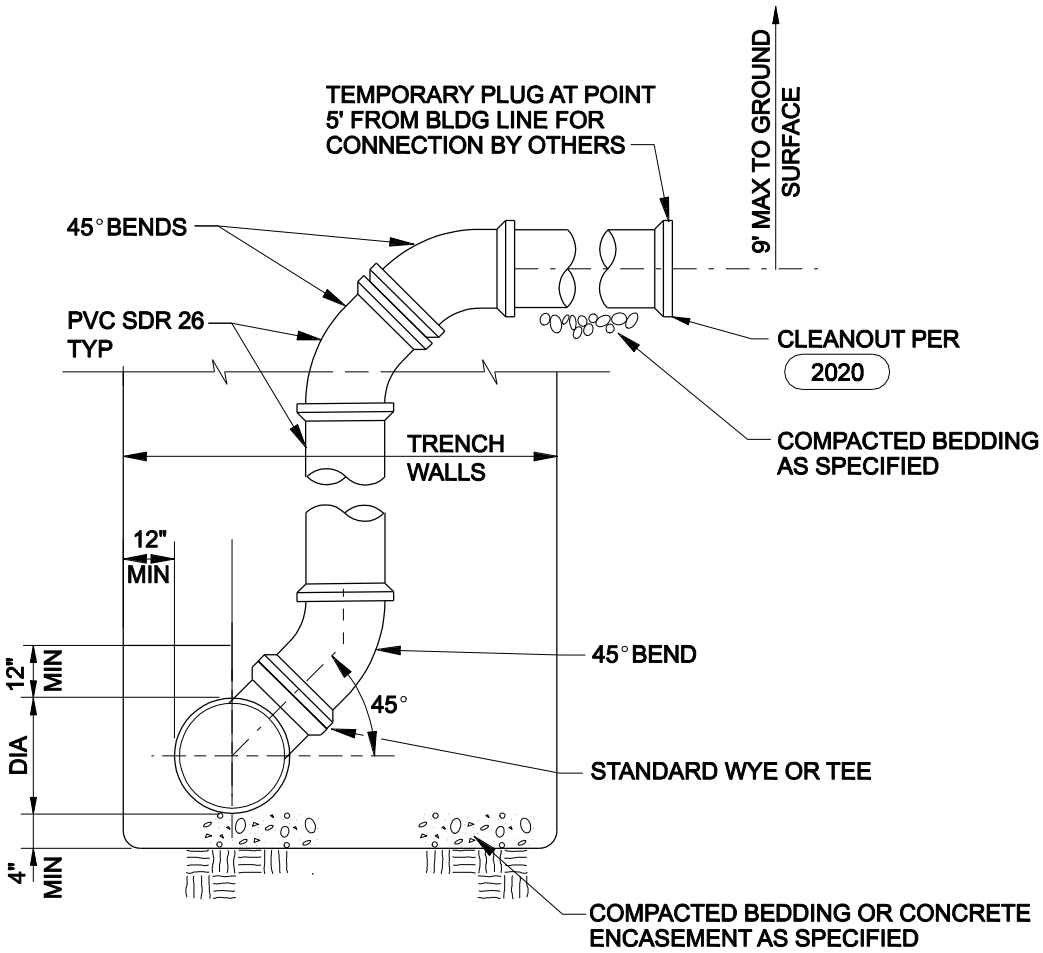

SECTION A-A

ALTERNATE SANITARY SEWER SERVICE CONNECTION

NTS

2082

FORT CAMPBELL, KY
STANDARD DRAWINGS FOR WATER AND
WASTEWATER CONSTRUCTION
FEBRUARY 2007

CH2MHILL

fc2082_05_01.dgn

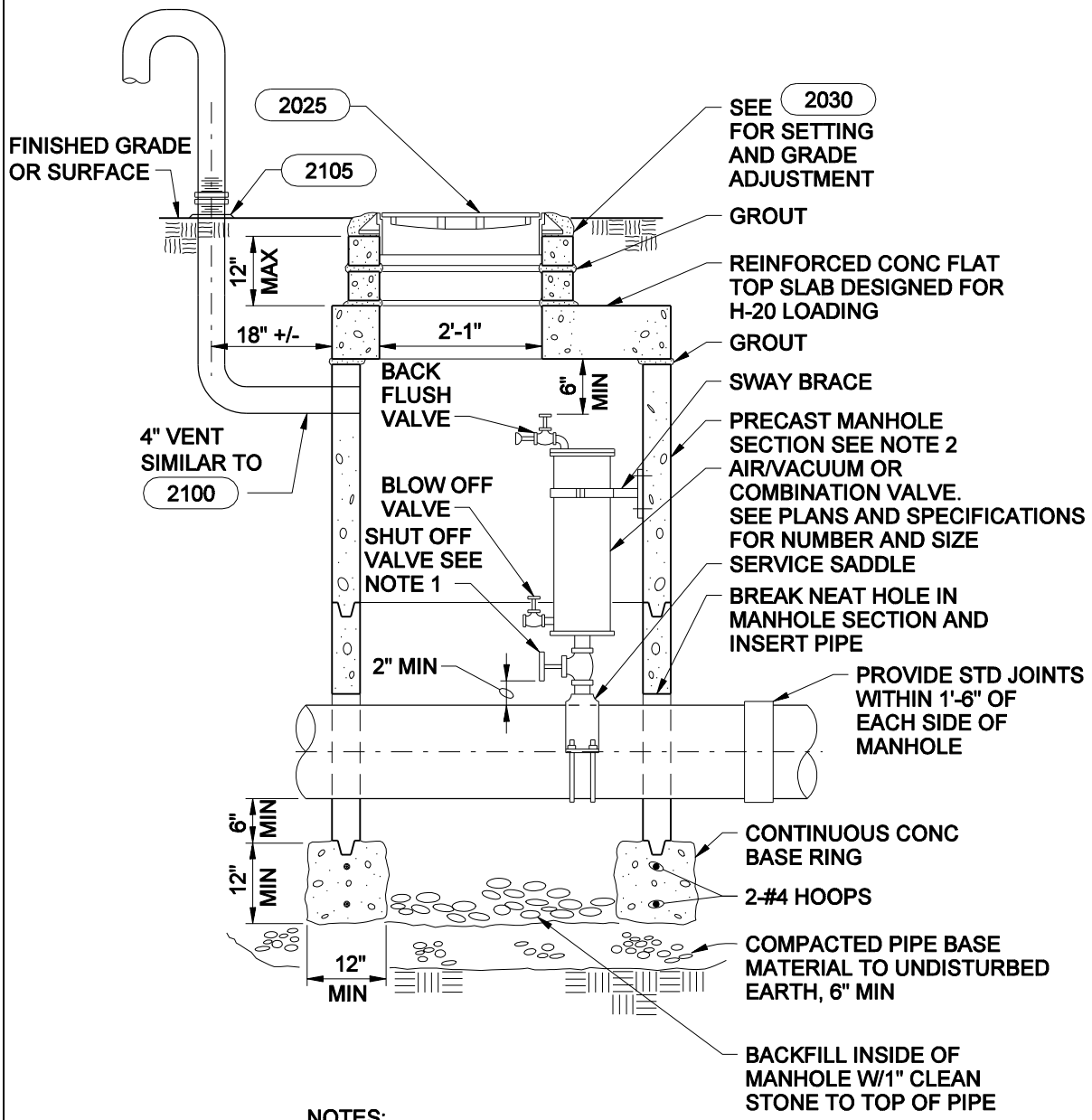

NOTES:

1. FURNISHED AS PART OF AIR/VACUUM.
2. FOR TYPE V745 AND V752, USE 48" DIA MH. FOR TYPE V754, USE 60" DIA MH.
3. PLACE ASSEMBLY ABOVE 100 YEAR FLOOD PLAIN.

AIR VACUUM RELEASE VALVE/MANHOLE ASSEMBLY

NTS

2090

FORT CAMPBELL, KY
STANDARD DRAWINGS FOR WATER AND WASTEWATER CONSTRUCTION
FEBRUARY 2007

CH2MHILL

fc2090_05_01.dgn

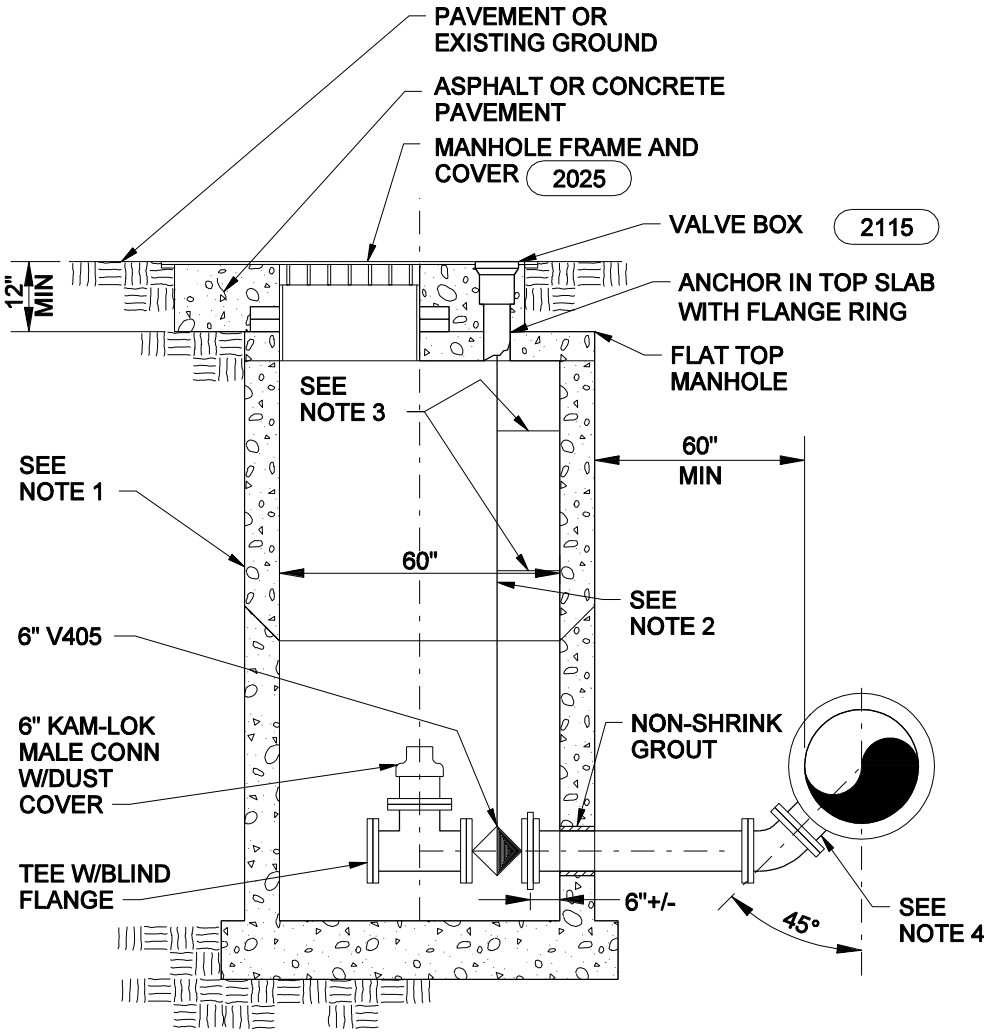

NOTES:

1. FLAT TOP PRECAST MANHOLE SIMILAR TO 2090 .
2. SOLID STEEL EXTENSION STEM TO EXTEND ABOVE BOTTOM OF VALVE BOX.
3. BRACKETS TO SUPPORT STEM EXTENSION BY VALVE MFR 2480 .
4. TEE IN PIPELINE WITH FLANGE BRANCH.

BLOWOFF ASSEMBLY/MANHOLE

NTS

2095

FORT CAMPBELL, KY
STANDARD DRAWINGS FOR WATER AND
WASTEWATER CONSTRUCTION
FEBRUARY 2007

CH2MHILL

fc2095_05_01.dgn

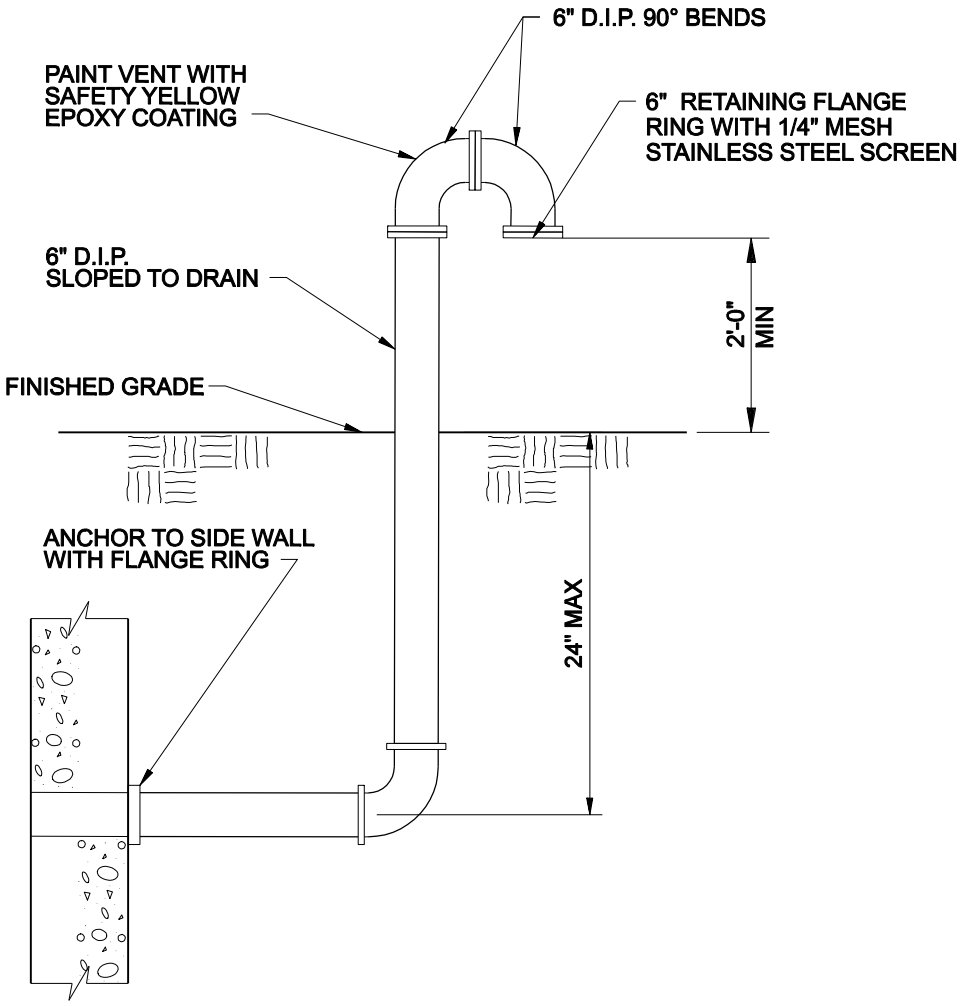

VENT

NTS

2100

FORT CAMPBELL, KY
STANDARD DRAWINGS FOR WATER AND WASTEWATER CONSTRUCTION
FEBRUARY 2007

CH2MHILL

fc2100_05_01.dgn

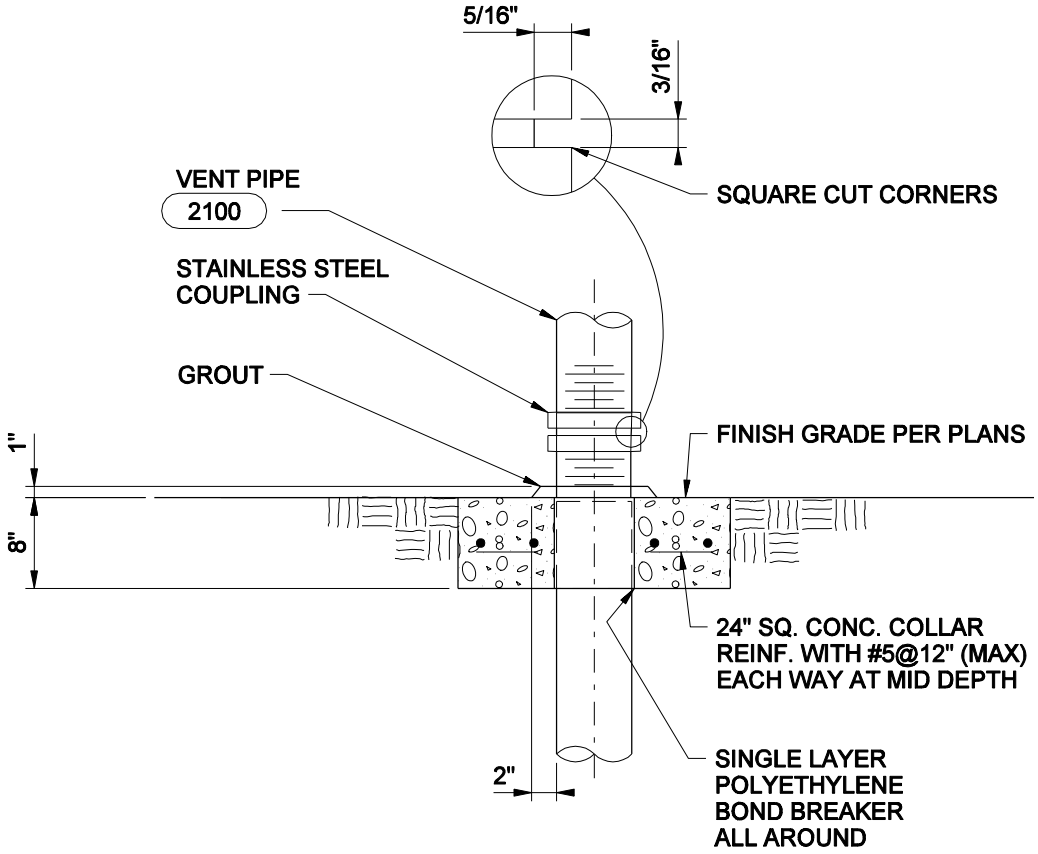

NOTE:

1. TROWEL FINISH ALL EXPOSED CONCRETE SURFACES.

BREAK-AWAY COUPLING

NTS

2105

FORT CAMPBELL, KY
STANDARD DRAWINGS FOR WATER AND
WASTEWATER CONSTRUCTION
FEBRUARY 2007

CH2MHILL

fc2105_05_01.dgn

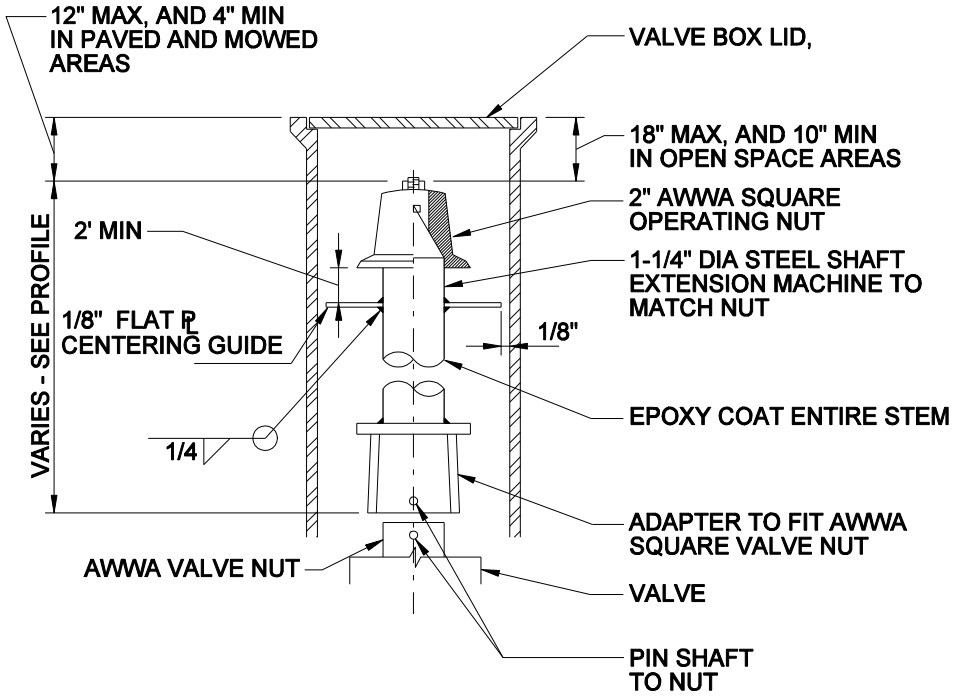

NOTES:

1. VALVE PAD NOT SHOWN. SEE 2180 .

VALVE BOX/OPERATOR STEM

NTS

2115

FORT CAMPBELL, KY
STANDARD DRAWINGS FOR WATER AND
WASTEWATER CONSTRUCTION
FEBRUARY 2007

CH2MHILL

fc2115_05_01.dgn

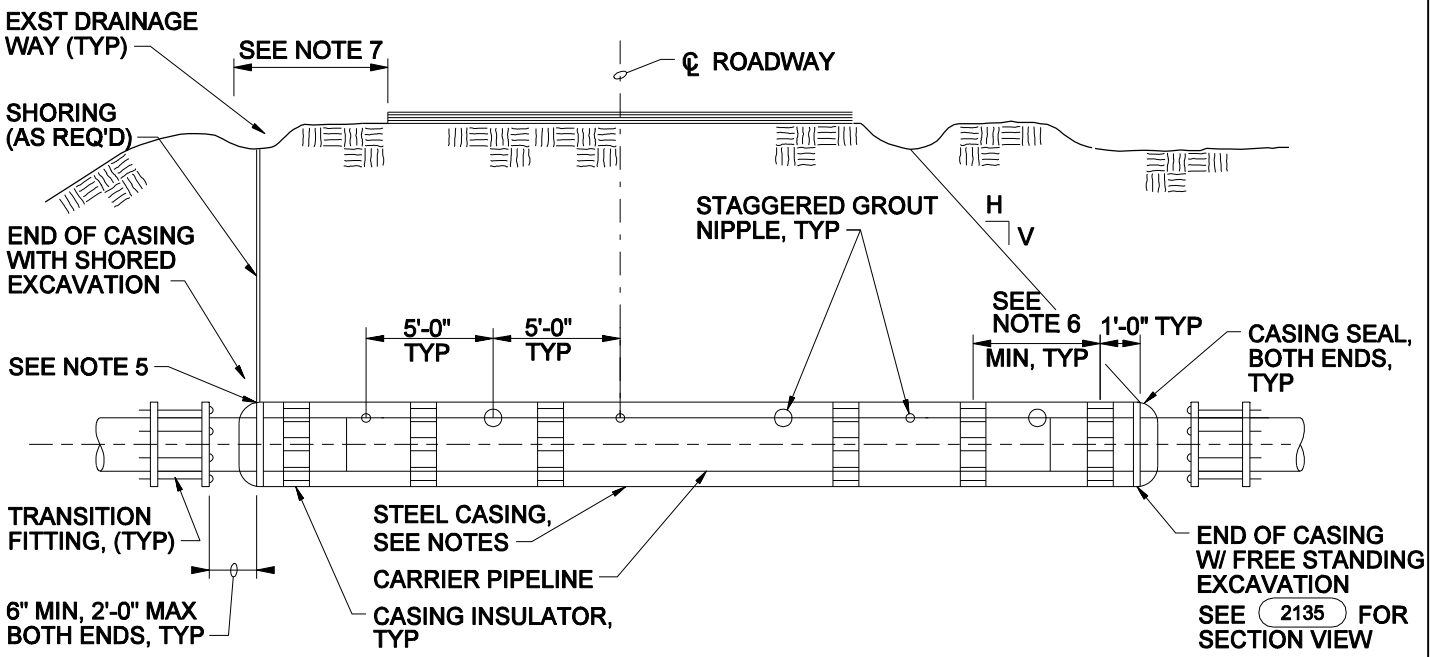

NOTES:

1. SPACE ADDITIONAL INSULATORS AS NECESSARY AT 10'-0" INTERVALS MAXIMUM, OR AS RECOMMENDED BY MANUFACTURER.
2. INSTALL ADDITIONAL INSULATORS 1'-0" ON EACH SIDE OF JOINTS.
3. USE RESTRAINED MECHANICAL JOINTS FOR ALL PIPE WITHIN CASING.
4. MINIMUM CARRIER AND CASING PIPE DIAMETER, AND CASING PIPING THICKNESS AS SPECIFIED ON 2135.
5. FOR LEVEE CROSSINGS: DIMENSION FROM TOE OF SLOPE TO TOP OF CASING SHALL BE 60" UNLESS OTHERWISE NOTED ON PROFILE.
6. EXTEND 5'-0" MINIMUM BEYOND TOE OF SLOPE.
7. EXTEND 10'-0" MINIMUM BEYOND EDGE OF PAVEMENT, TYP.

CASED PAVEMENT/LEVEE CROSSING

NTS

2125

FORT CAMPBELL, KY
STANDARD DRAWINGS FOR WATER AND WASTEWATER CONSTRUCTION
FEBRUARY 2007

CH2MHILL

fc2125_05_01.dgn

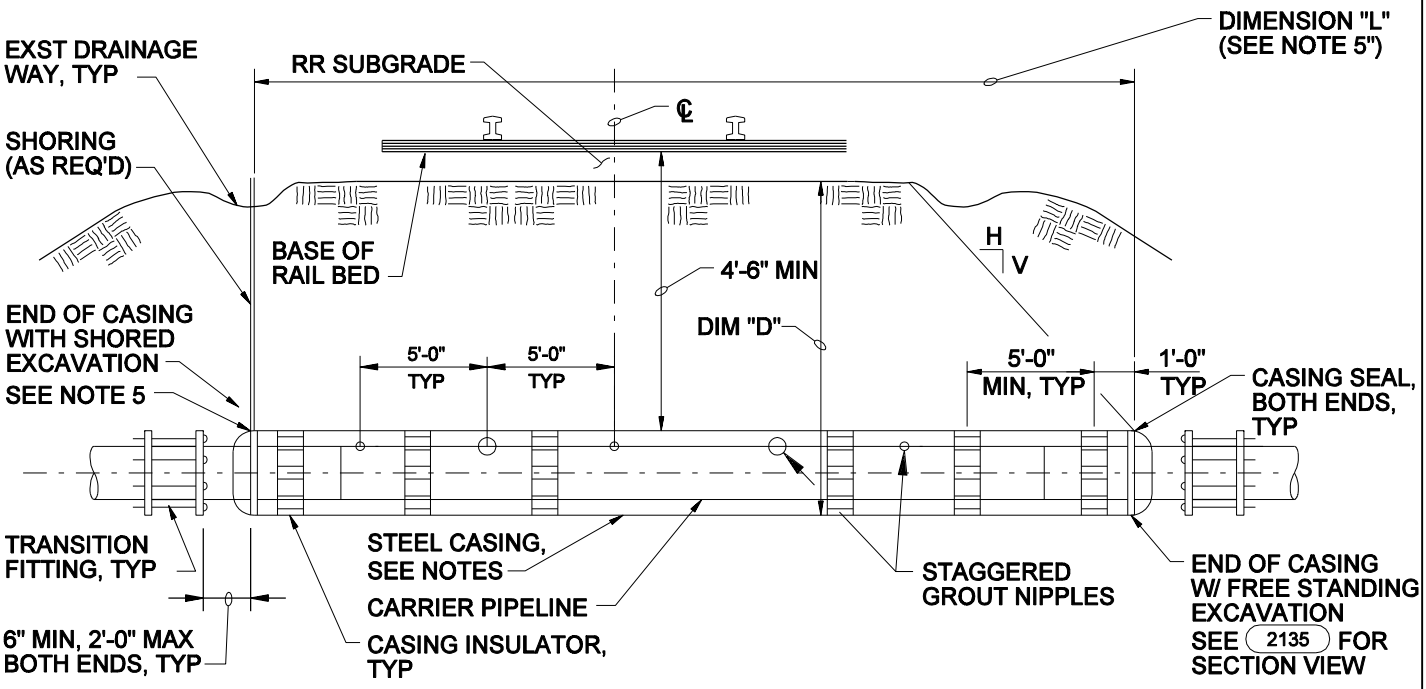

NOTES:

1. SPACE ADDITIONAL INSULATORS AS NECESSARY AT 10'-0" INTERVALS MAXIMUM, OR AS RECOMMENDED BY MANUFACTURER.
2. INSTALL ADDITIONAL INSULATORS 1'-0" ON EACH SIDE OF JOINTS.
3. USE RESTRAINED MECHANICAL JOINTS FOR ALL PIPE WITHIN CASING.
4. CARRIER AND CASING PIPE DIAMETER AND CASING PIPING THICKNESS AS SPECIFIED ON 2135.
5. L= 60 FT OR 2 TIMES "D" + 20 FEET, WHICHEVER IS GREATER.
6. EXTEND 5'-0" MINIMUM BEYOND TOE OF SLOPE.

CASED RAILROAD CROSSING

NTS

2130

FORT CAMPBELL, KY
STANDARD DRAWINGS FOR WATER AND WASTEWATER CONSTRUCTION
FEBRUARY 2007

CH2MHILL

fc2130_05_01.dgn

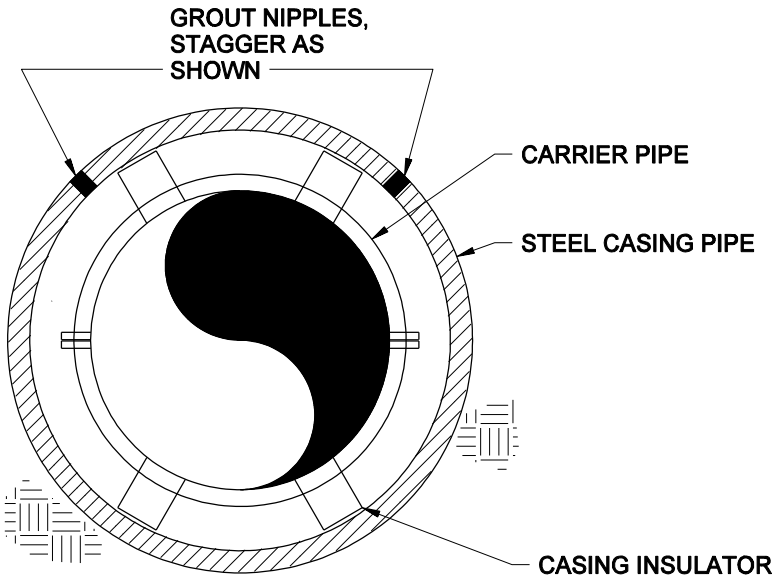

NOTE:

1. GROUT AND NIPPLES SHALL NOT TYPICALLY BE REQUIRED, EXCEPT WHERE INDICATED ON THE DRAWINGS.

TABLE OF MINIMUM WALL THICKNESS
FOR STEEL CASING PIPE FOR E80 LOADING

CARRIER PIPE	CASING PIPE	NOMINAL THICKNESS
4	8	0.251"
6	12	0.251"
8	16	0.282"
10	18	0.313"
10	20	0.344"
12	22	0.344"
14	24	0.375"
16	26	0.407"
18	28	0.438"
20	30	0.469"
22	32	0.501"
26	36	0.532"

CASED PIPE SECTION

NTS

2135

FORT CAMPBELL, KY
STANDARD DRAWINGS FOR WATER AND
WASTEWATER CONSTRUCTION
FEBRUARY 2007

CH2MHILL

fc2135_05_01.dgn

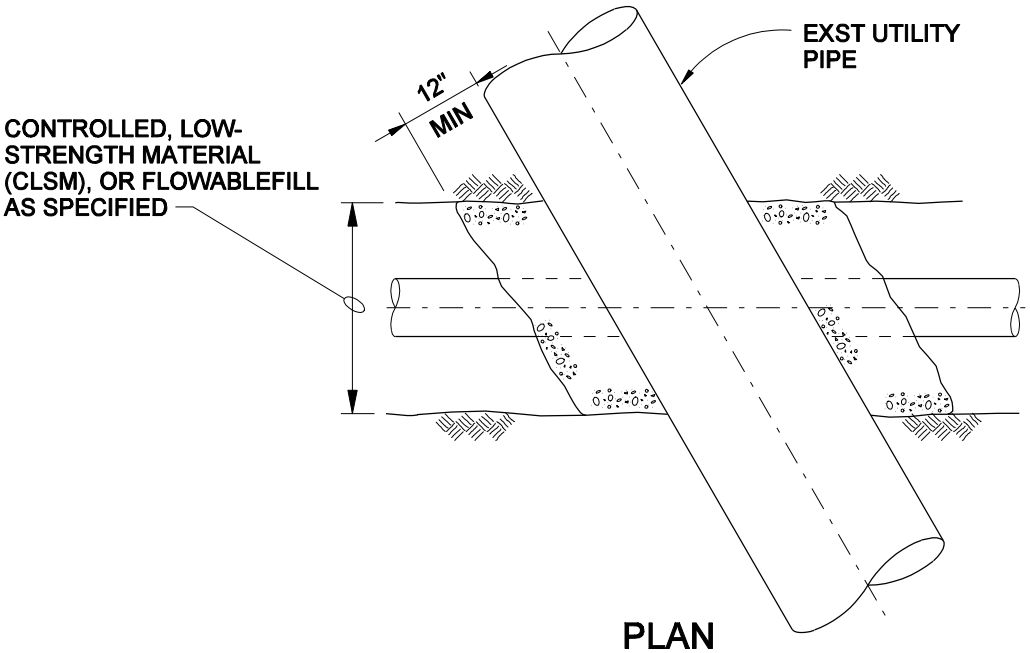

PLAN

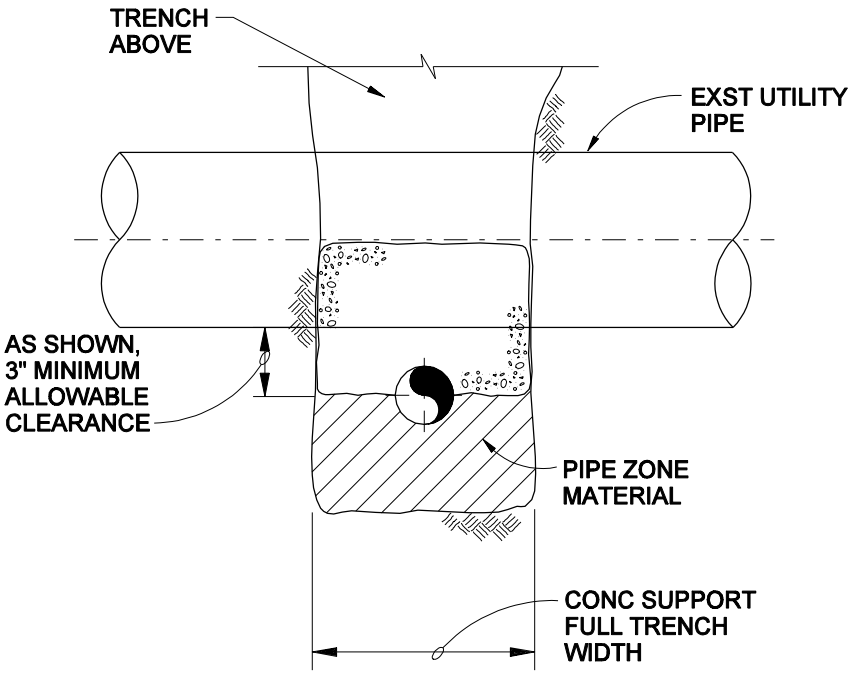

ELEVATION

NOTES:

1. FIELD WRAP EXISTING AND NEW PIPES WITH AN ADDITIONAL 30 MIL OF POLYETHYLENE WRAP PRIOR TO PLACING CONCRETE.

CONCRETE SUPPORT FOR CROSSING EXIST. UTILITIES

NTS

2140

FORT CAMPBELL, KY
STANDARD DRAWINGS FOR WATER AND WASTEWATER CONSTRUCTION
FEBRUARY 2007

CH2MHILL

fc2140_05_01.dgn

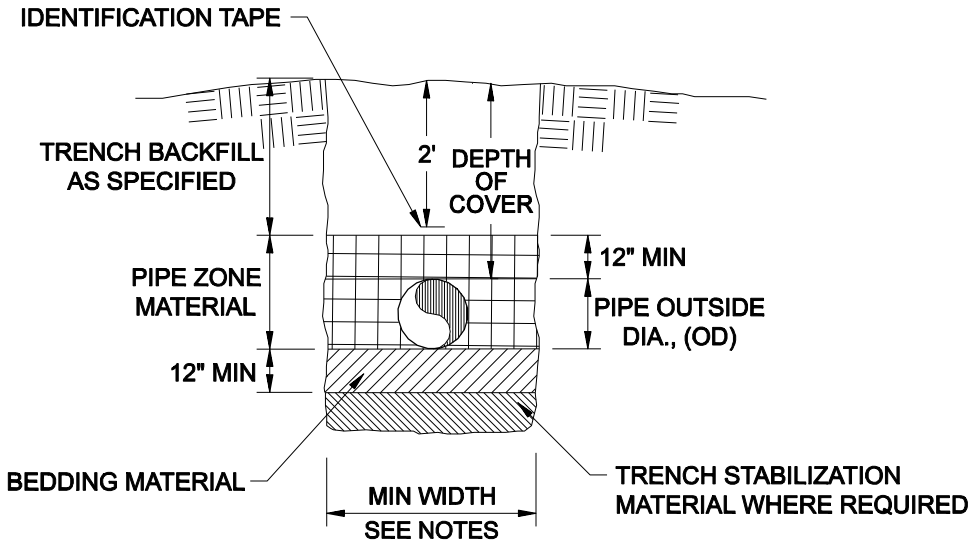

NOTES:

1. 30" MINIMUM TRENCH WIDTH FOR ALL PIPES UP TO AND INCLUDING 18" ID.
2. OD + 18" FOR ALL PIPES OVER 18" ID.
3. PROVIDE BELL HOLES IN BEDDING AT EACH JOINT TO AVOID BRIDGING.
4. 36" MINIMUM DEPTH OF COVER.

TYPICAL TRENCH

NTS

2150

FORT CAMPBELL, KY
STANDARD DRAWINGS FOR WATER AND
WASTEWATER CONSTRUCTION
FEBRUARY 2007

CH2MHILL

fc2150_05_01.dgn

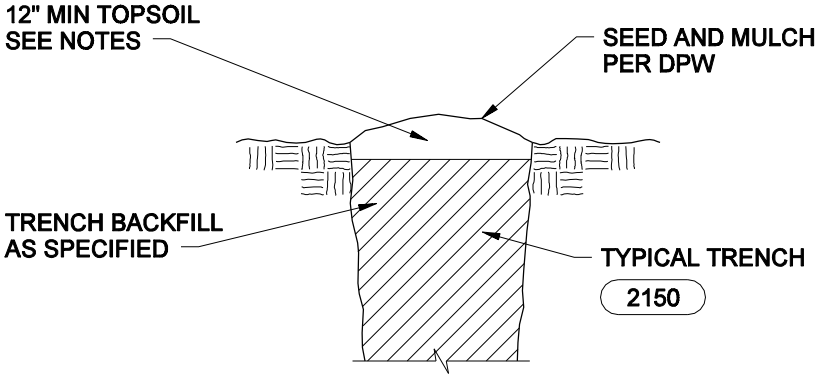

GRASS

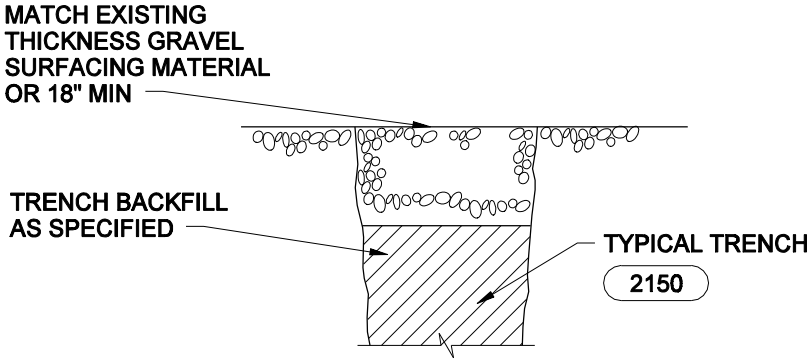

GRAVEL SURFACE

NOTE:

1. TOPSOIL CAN BE IMPORTED OR NATIVE MATERIAL STRIPPED, STOCKPILED SEPARATELY, OR REPLACED.

SURFACE RESTORATION-NON PAVED AREAS

NTS

2160

FORT CAMPBELL, KY
STANDARD DRAWINGS FOR WATER AND
WASTEWATER CONSTRUCTION
FEBRUARY 2007

CH2MHILL

fc2160_05_01.dgn

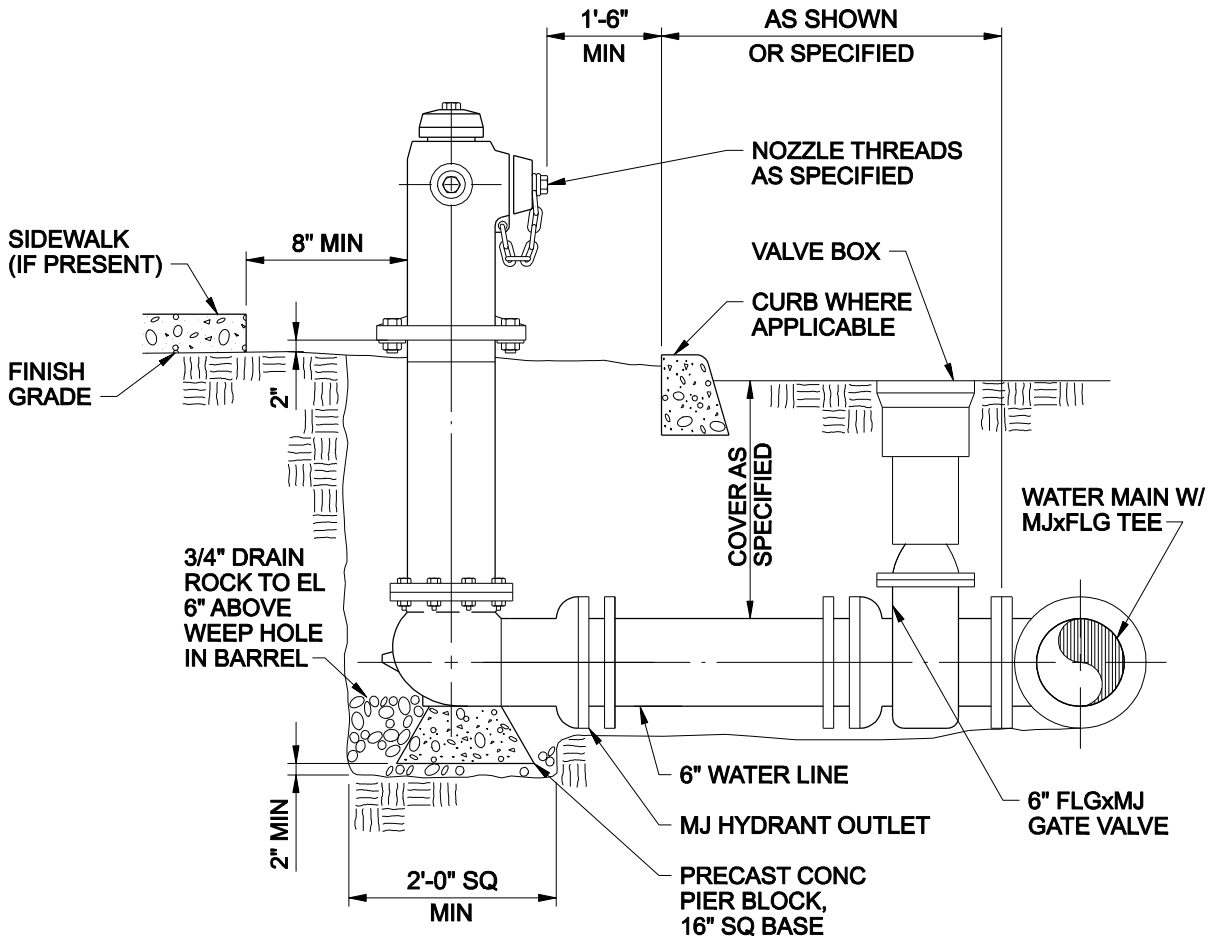

NOTE:
ALL JOINTS TO BE RESTRAINED.

FIRE HYDRANT
NTS

2175

FORT CAMPBELL, KY
STANDARD DRAWINGS FOR WATER AND
WASTEWATER CONSTRUCTION
FEBRUARY 2007

CH2MHILL

fc2175_05_01.dgn

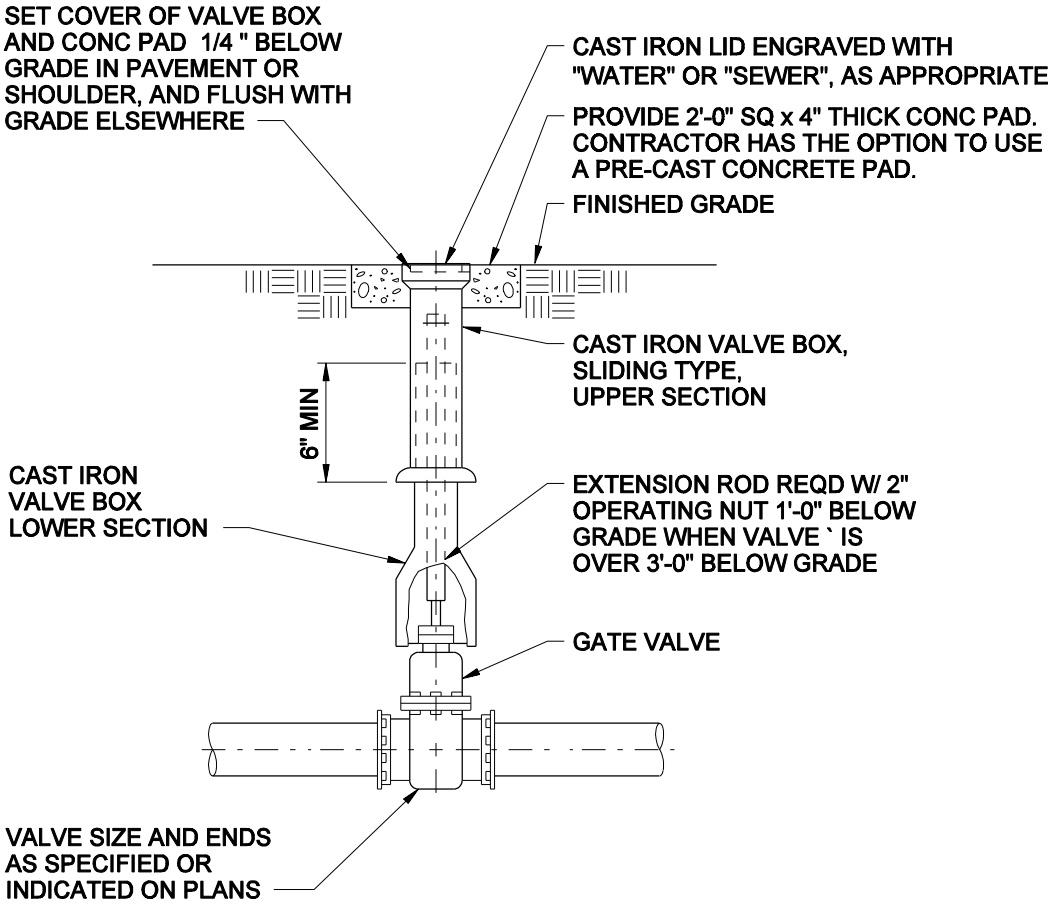

BURIED GATE VALVE

NTS

2180

FORT CAMPBELL, KY
STANDARD DRAWINGS FOR WATER AND WASTEWATER CONSTRUCTION
FEBRUARY 2007

CH2MHILL

fc2180_05_01.dgn

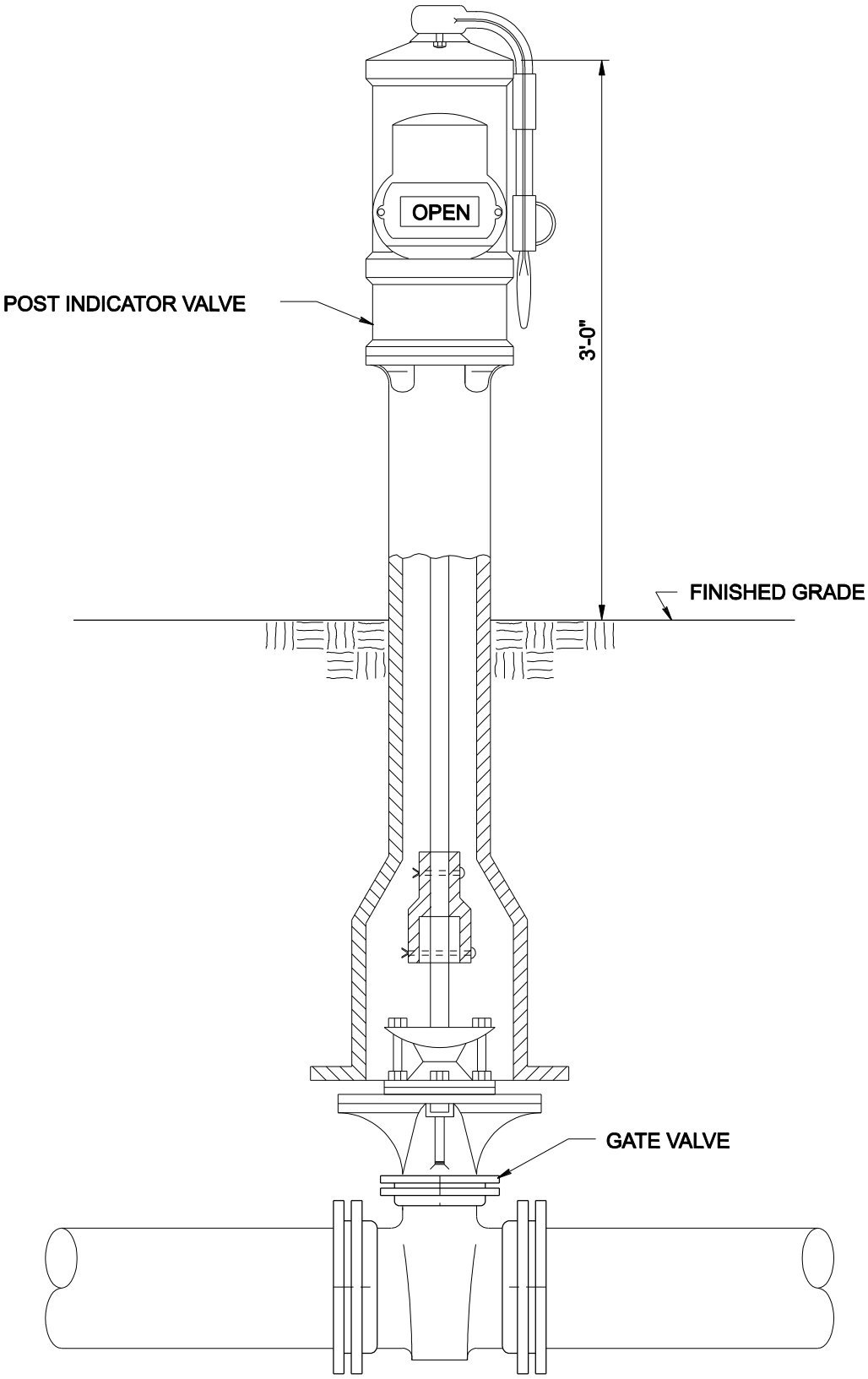

POST INDICATOR VALVE

NTS

2181

FORT CAMPBELL, KY
STANDARD DRAWINGS FOR WATER AND
WASTEWATER CONSTRUCTION
FEBRUARY 2007

CH2MHILL

fc2181_05_01.dgn

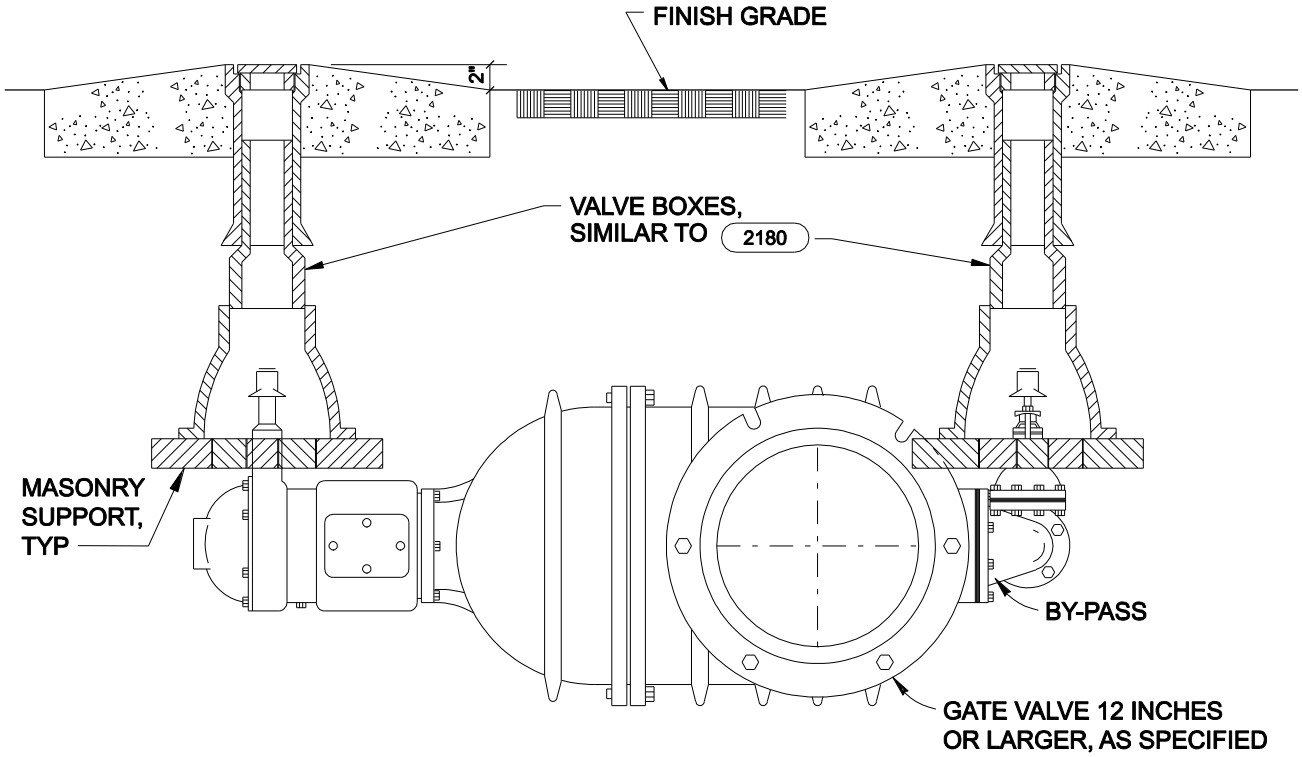

TYPICAL VALVE AND BOX SETTING WITH BY-PASS

NTS

2182

FORT CAMPBELL, KY
STANDARD DRAWINGS FOR WATER AND
WASTEWATER CONSTRUCTION
FEBRUARY 2007

CH2MHILL

fc2182_05_01.dgn

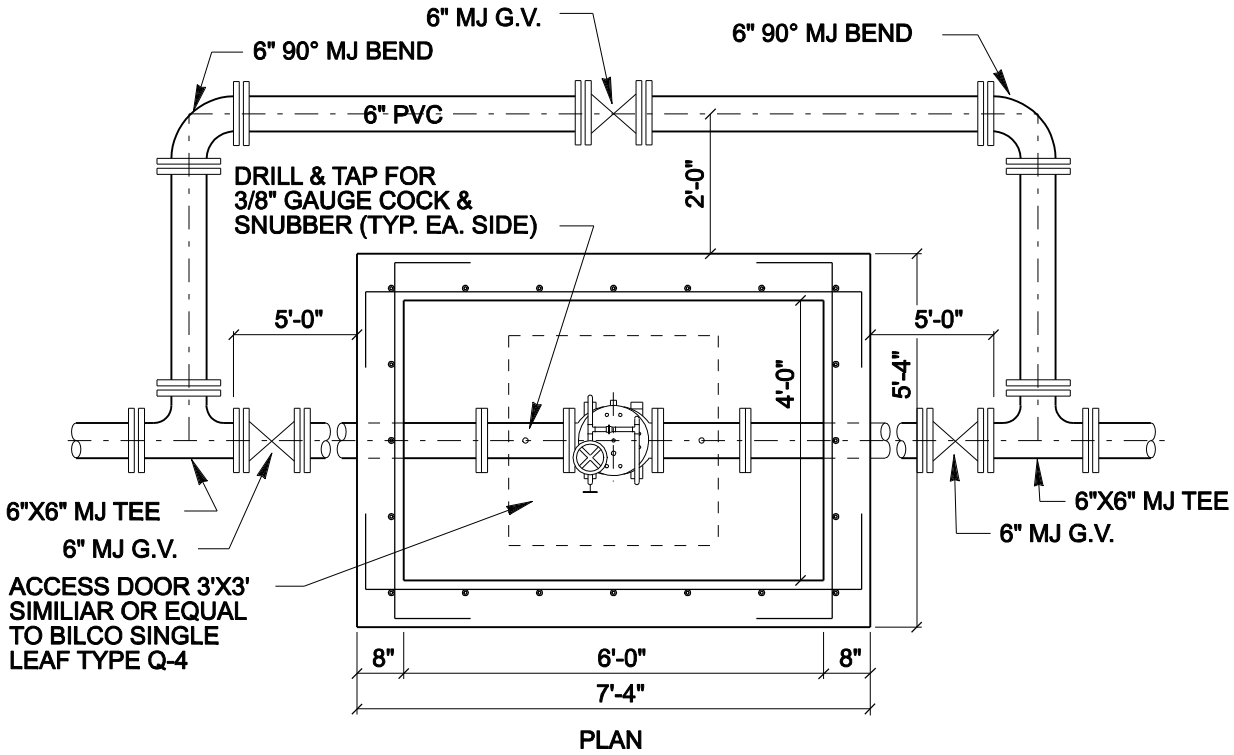

PLAN

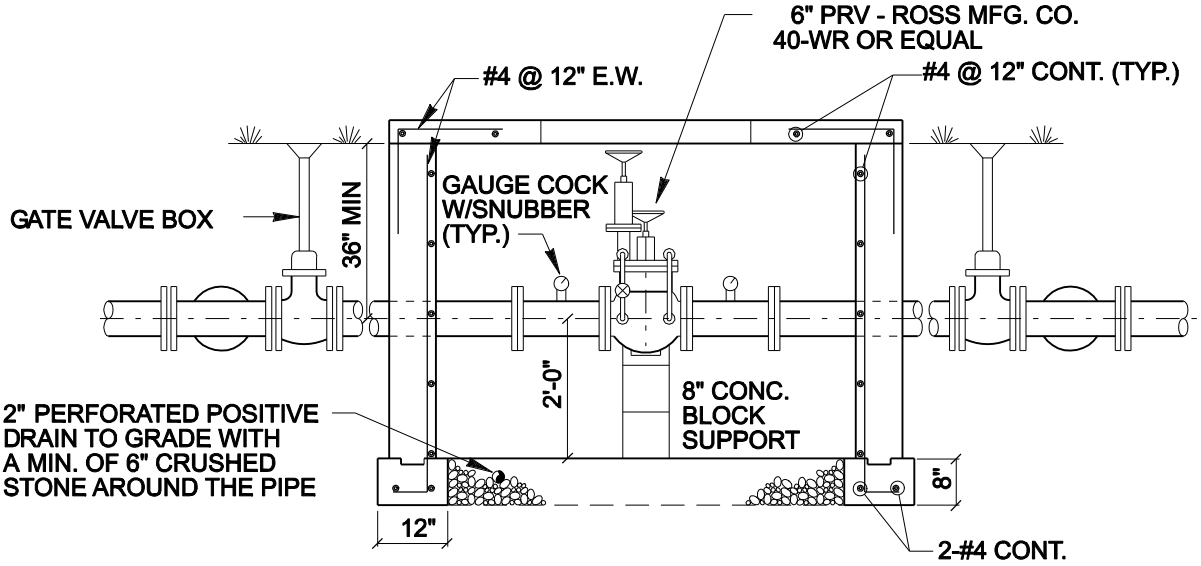

PRESSURE REDUCING VALVE

NTS

2311

FORT CAMPBELL, KY
STANDARD DRAWINGS FOR WATER AND
WASTEWATER CONSTRUCTION
FEBRUARY 2007

CH2MHILL

fc2311_05_01.dgn

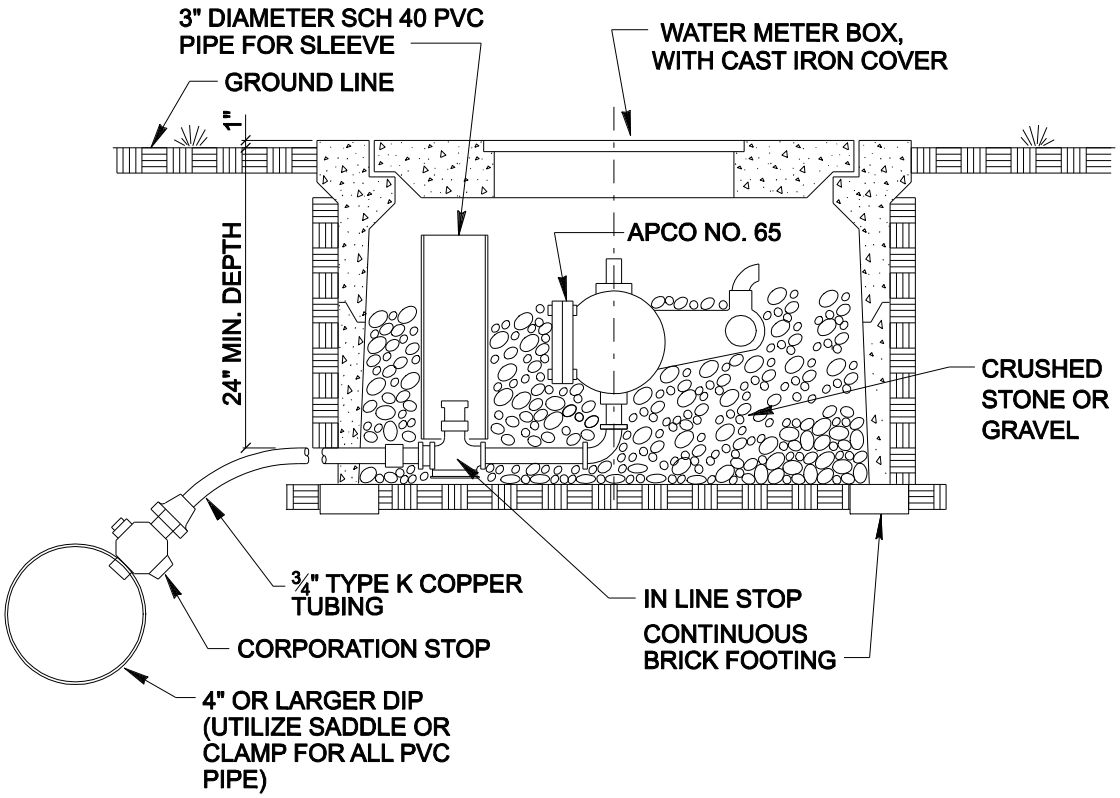

NOTE

1. FOR AUTOMATIC AIR RELEASE VALVE USE AS SHOWN. FOR MANUAL AIR RELEASE OMIT THE APCO NO. 65 VALVE AND USE A 12" NIPPLE WITH A THREADED END.

AUTOMATIC AIR RELEASE ASSEMBLY FOR WATER LINE SERVICE

NTS

2330

FORT CAMPBELL, KY
STANDARD DRAWINGS FOR WATER AND WASTEWATER CONSTRUCTION
FEBRUARY 2007

CH2MHILL

fc2330_05_01.dgn

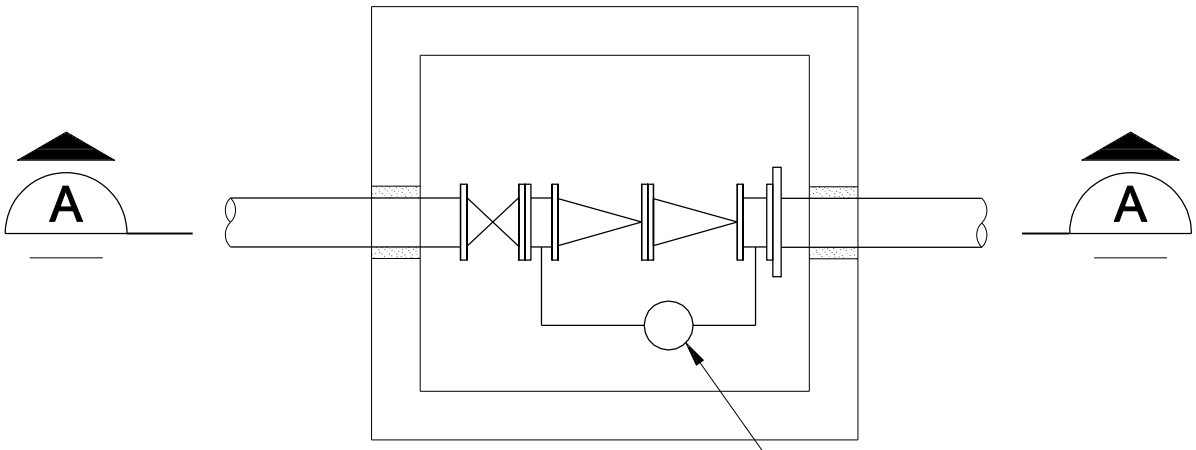

PLAN

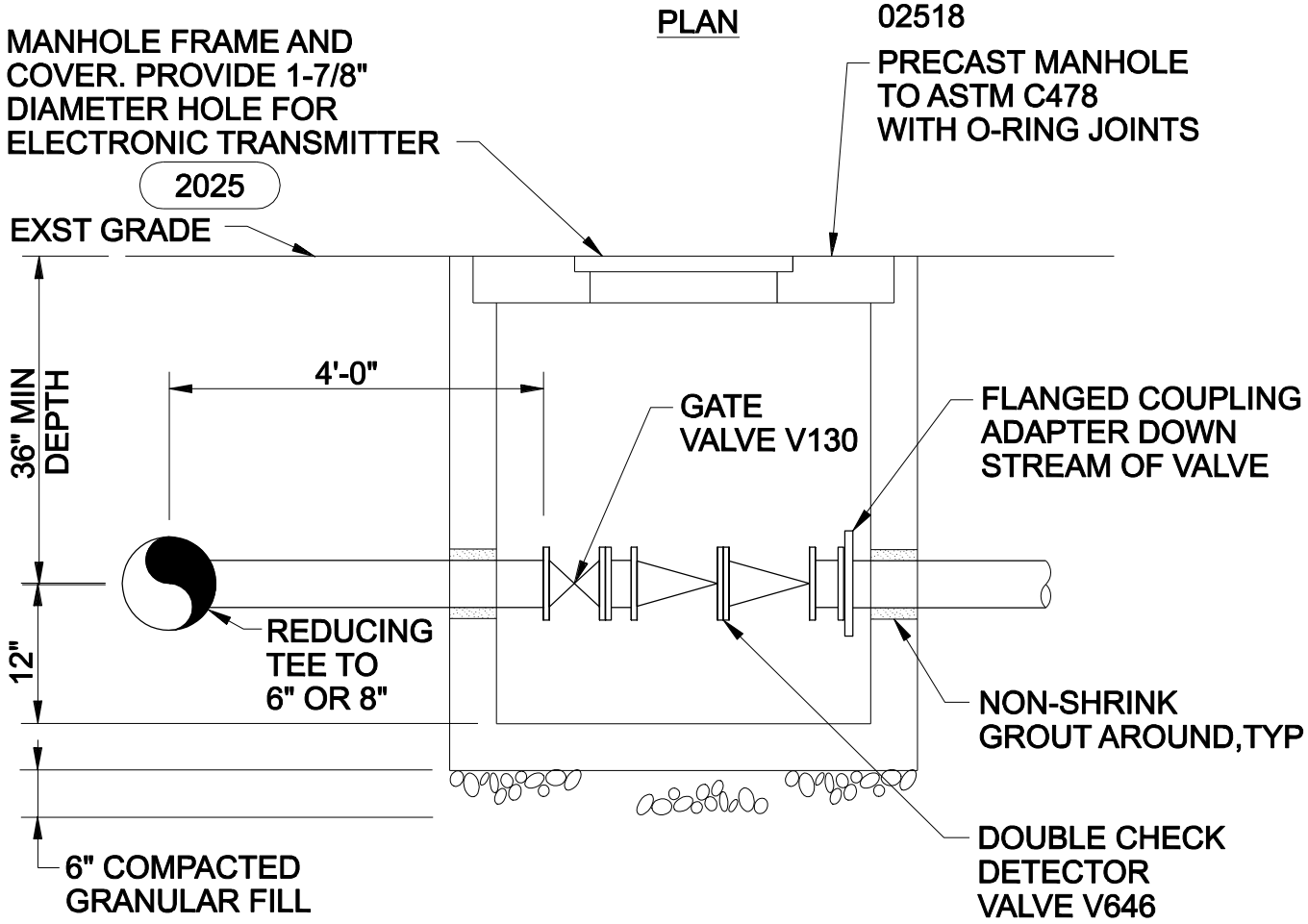

SECTION A-A

DOUBLE DETECTOR CHECK VALVE & VAULT

NTS

2331

FORT CAMPBELL, KY
STANDARD DRAWINGS FOR WATER AND
WASTEWATER CONSTRUCTION
FEBRUARY 2007

CH2MHILL

fc2331_05_01.dgn

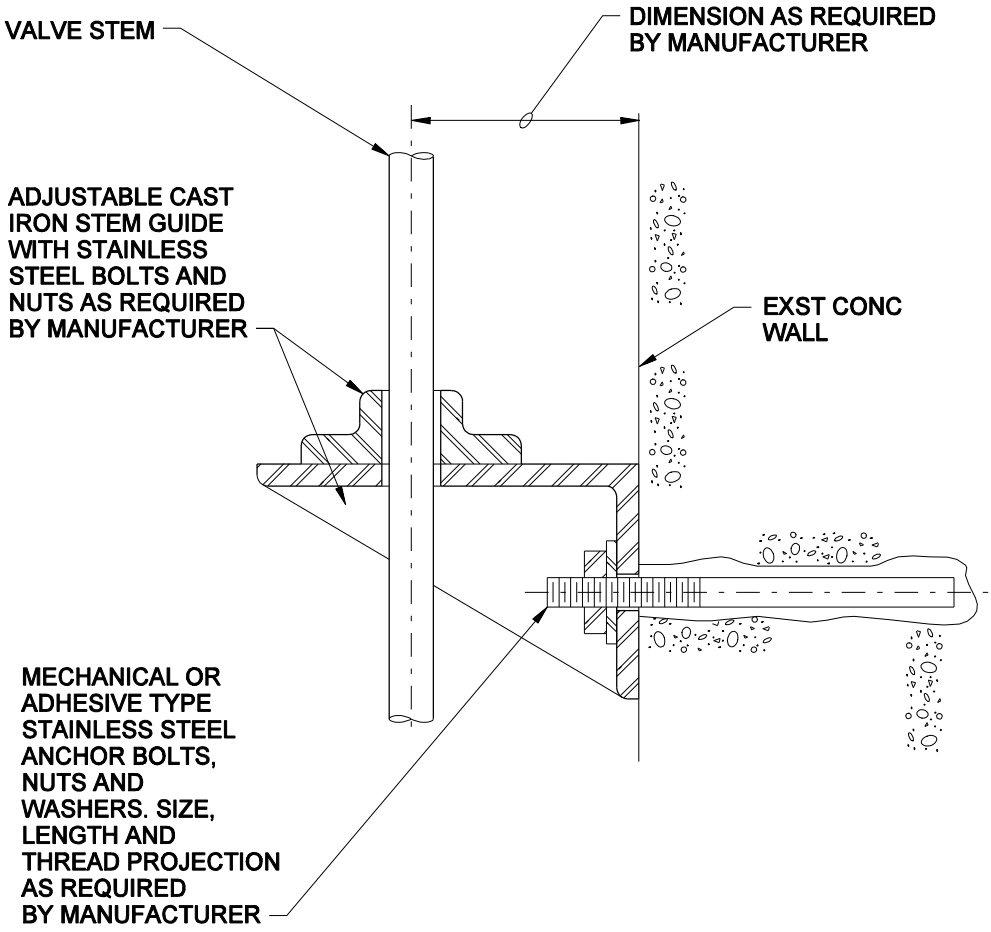

STEM GUIDE INSTALLATION

NTS

2480

FORT CAMPBELL, KY
STANDARD DRAWINGS FOR WATER AND WASTEWATER CONSTRUCTION
FEBRUARY 2007

CH2MHILL

fc2480_05_01.dgn

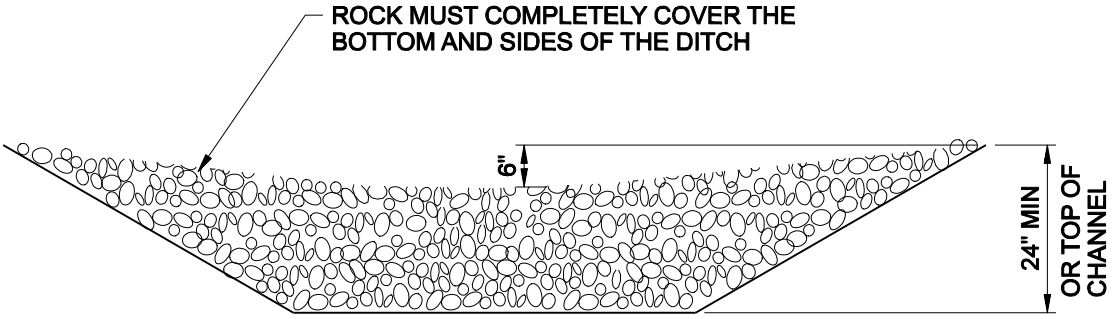

CROSS SECTION

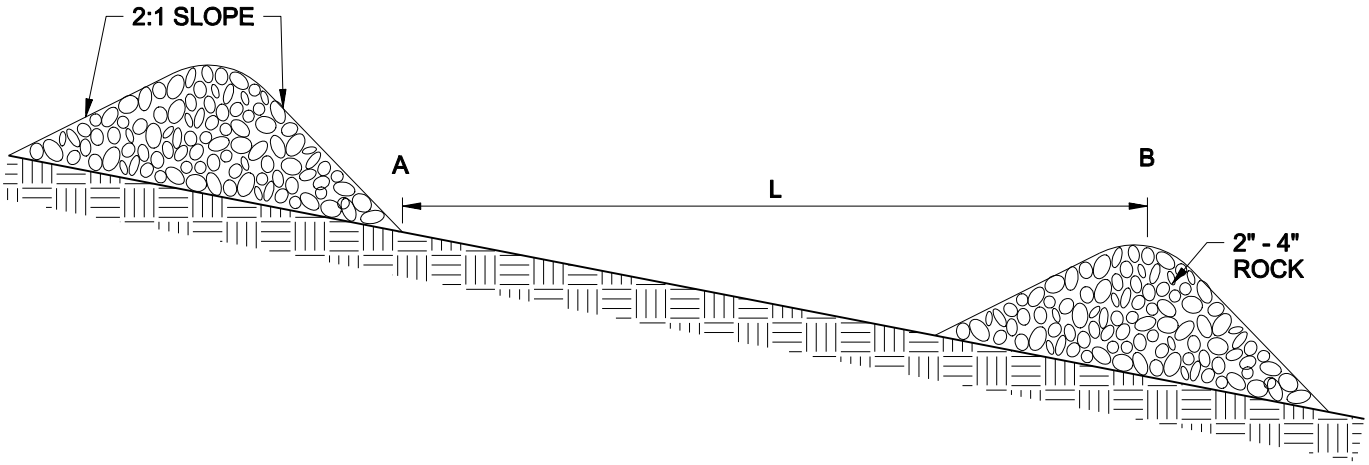

L = THE DISTANCE SUCH THAT POINTS A AND B ARE OF EQUAL ELEVATIONS

DAM SPACING

MAINTENANCE STANDARDS:

1. ANY SEDIMENT DEPOSITION OF MORE THAN 0.5 FEET SHALL BE REMOVED SO THAT THE CHANNEL IS RESTORED TO ITS DESIGN CAPACITY.

2. THE CHANNEL SHALL BE EXAMINED FOR SIGNS OF SCOURING AND EROSION OF THE BED AND BANKS. IF SCOURING OR EROSION HAS OCCURRED, AFFECTED AREAS SHALL BE PROTECTED BY RIP-RAP OR AN EROSION CONTROL BLANKET OR NET.

ROCK CHECK DAM

NTS

2740

FORT CAMPBELL, KY
STANDARD DRAWINGS FOR WATER AND
WASTEWATER CONSTRUCTION
FEBRUARY 2007

CH2MHILL

fc2740_05_01.dgn

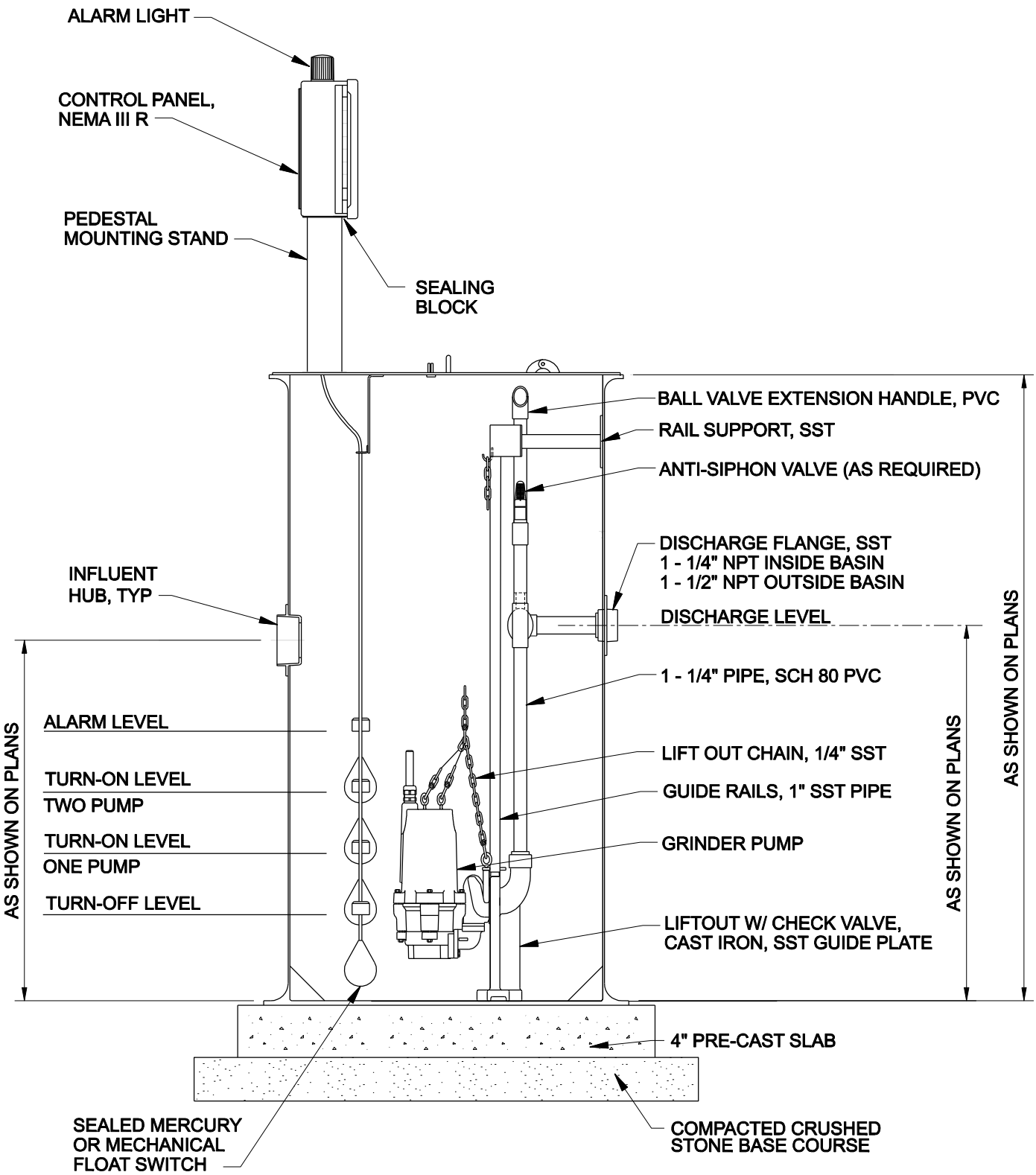

GRINDER PUMP STATION

NTS

2800

FORT CAMPBELL, KY
STANDARD DRAWINGS FOR WATER AND WASTEWATER CONSTRUCTION
FEBRUARY 2007

CH2MHILL

fc2800_05_01.dgn

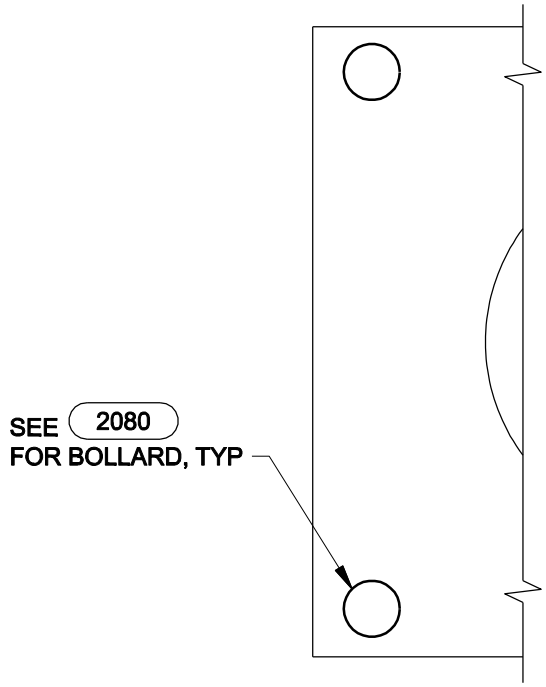

BOLLARD PLAN

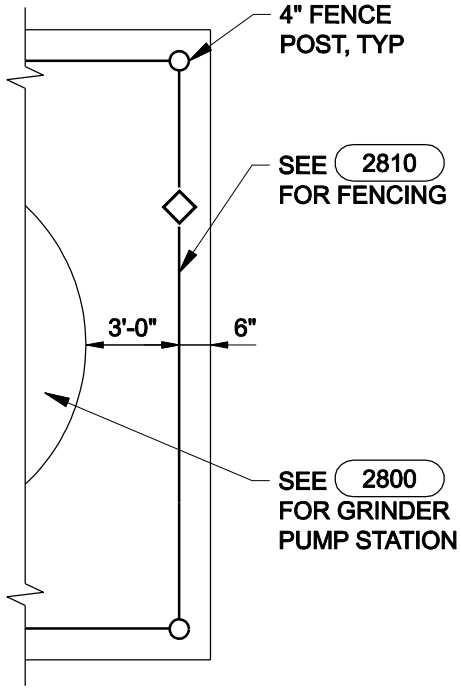

FENCING PLAN

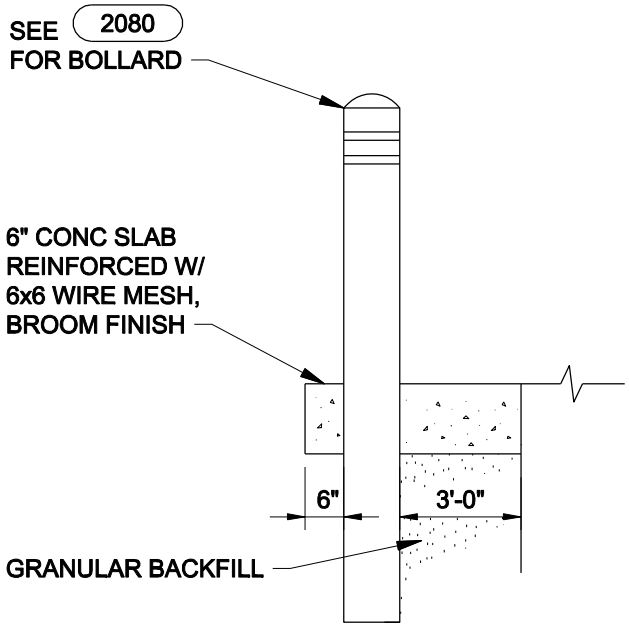

BOLLARD ELEVATION

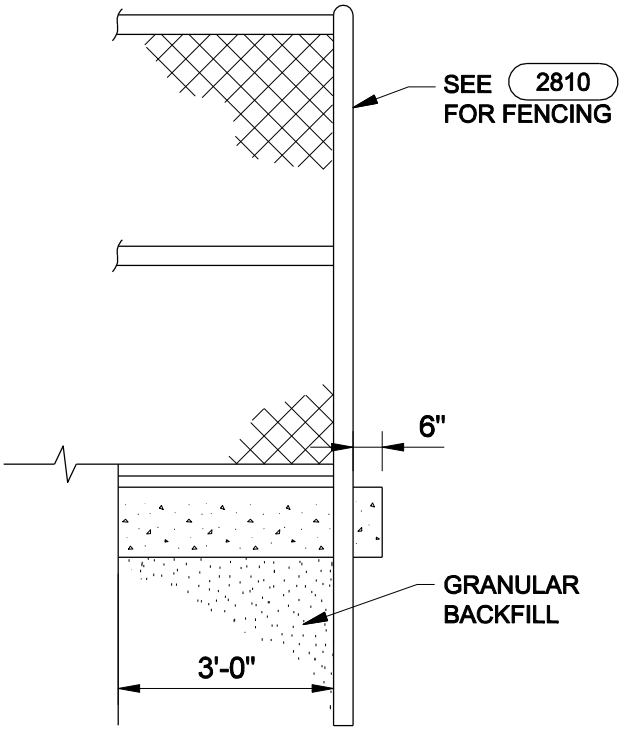

FENCING ELEVATION

PUMP STATION APRON SLAB

NTS

2805

FORT CAMPBELL, KY
STANDARD DRAWINGS FOR WATER AND
WASTEWATER CONSTRUCTION
FEBRUARY 2007

CH2MHILL

fc2805_05_01.dgn

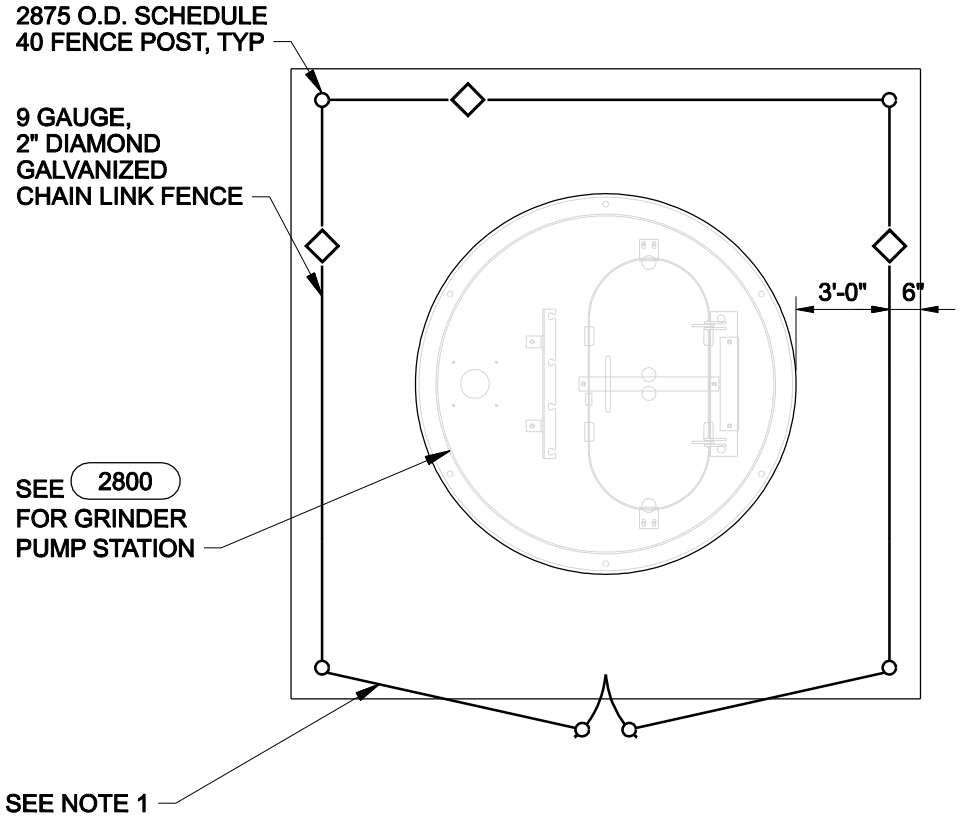

PLAN

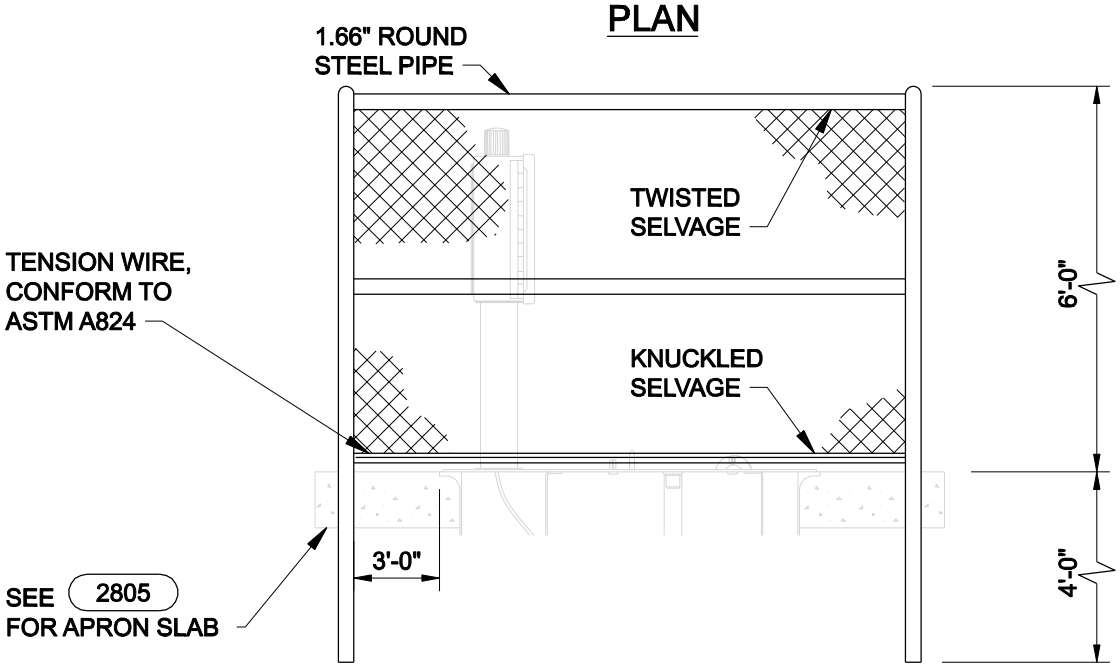

ELEVATION

PUMP STATION FENCING

NTS

2810

NOTES:

1. LOCKABLE GATE SHALL BE A MINIMUM OF 8'-0" WIDE AND A MAXIMUM OF 10'-0" WIDE. SHALL CONFORM TO ASTM F900.
2. GATE SHALL BE ORIENTATED RELATIVE TO PUMP STATION BY OWNER BEFORE CONSTRUCTION.

FORT CAMPBELL, KY
STANDARD DRAWINGS FOR WATER AND WASTEWATER CONSTRUCTION
FEBRUARY 2007

CH2MHILL

fc2810_05_01.dgn