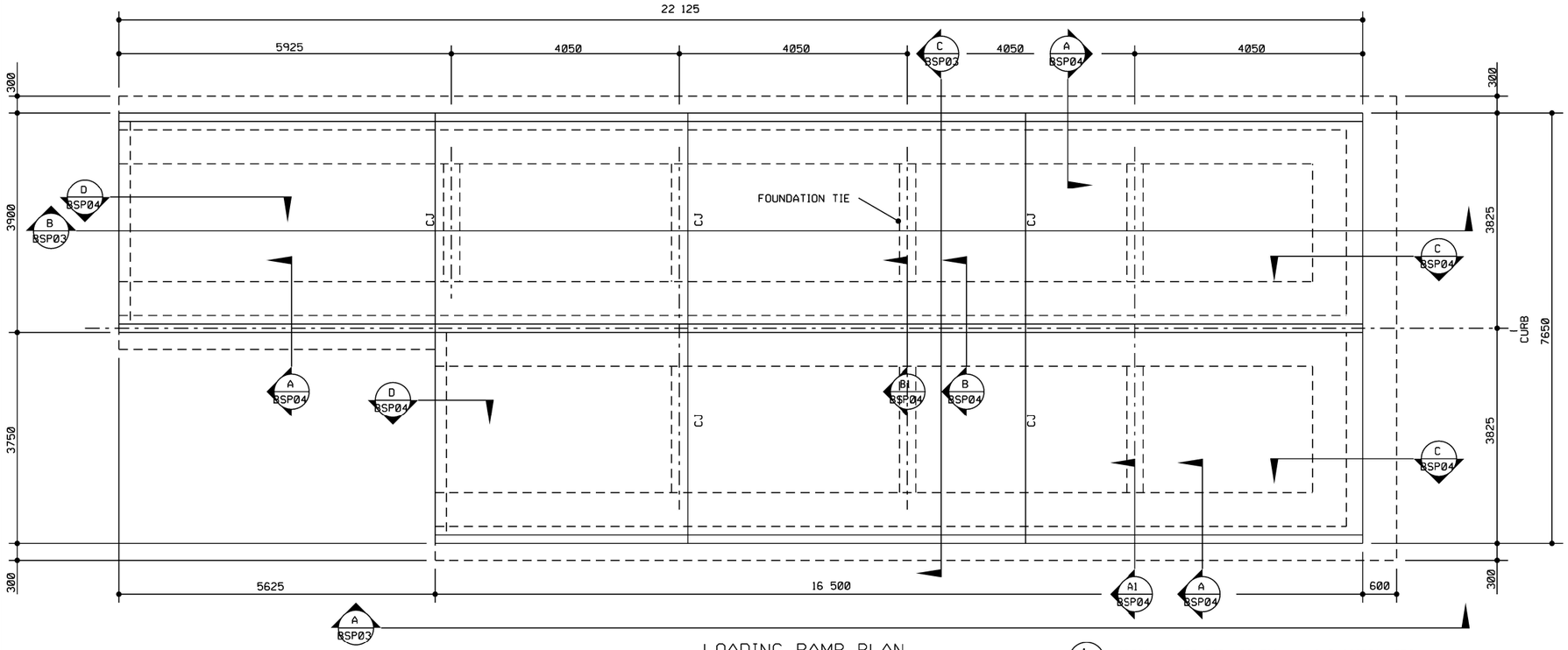

LOADING RAMP PLAN
SCALE: 1:50

1 C302 SPECIAL NOTE: FOR LOCATION, LAYOUT COORDINATES, AND SURROUNDING GRADE, REFER TO CIVIL DRAWINGS.

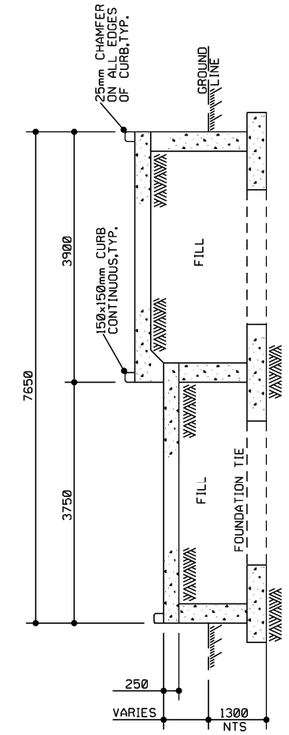

RAMP CROSS SECTION
SCALE: 1:50

C BSP03

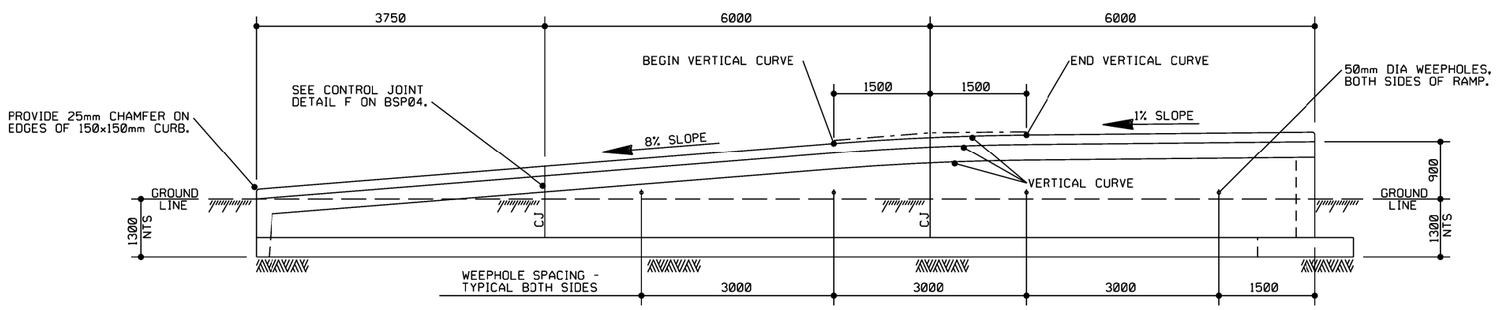

LOW RAMP ELEVATION
SCALE: 1:50

A BSP03

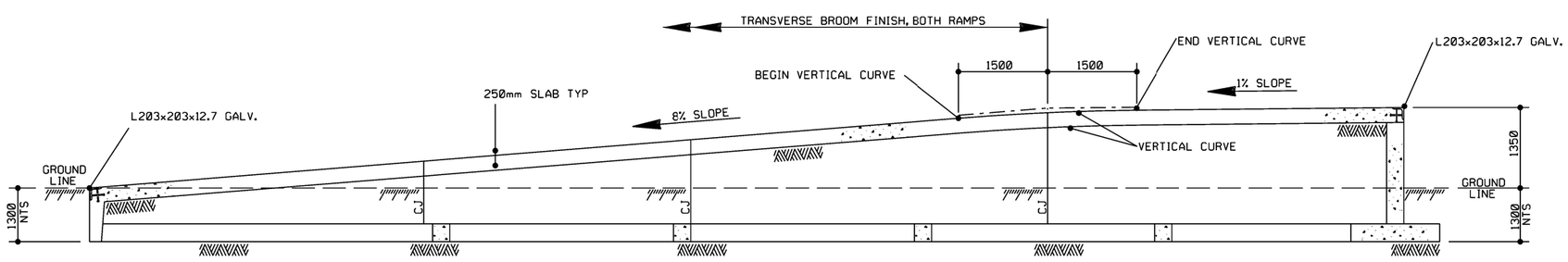

HIGH RAMP SECTION
SCALE: 1:50

B BSP03

DRAWING NOTES:

1. RAMP IS DESIGNED FOR A 63,500 kg TRACKED VEHICLE OR AN AASHTO HS 20 LOADING.
2. 28 DAY CONCRETE COMPRESSIVE STRENGTH, f'c, SHALL BE 27.5 MPa.
3. REINFORCING STEEL SHALL BE ASTM A615 GRADE 400 DEFORMED BARS. HORIZONTAL REINFORCING BARS IN OUTSIDE FACE OF WALLS SHALL BE CONTINUOUS AT CORNERS. BARS IN INSIDE FACE SHALL CROSS 90° AT CORNERS.
4. FILL MATERIAL SHALL BE IN ACCORDANCE WITH SPECIFICATIONS, "EXCAVATION, FILLING AND BACK-FILLING FOR BUILDINGS."
5. CJ REFERS TO CONTROL JOINT. SEE DETAIL ON SHEET BSP04.

2500mm 1250mm 0 2.5m

SCALE: 1:50

ALL DIMENSIONS ARE MILLIMETERS(mm) UNO

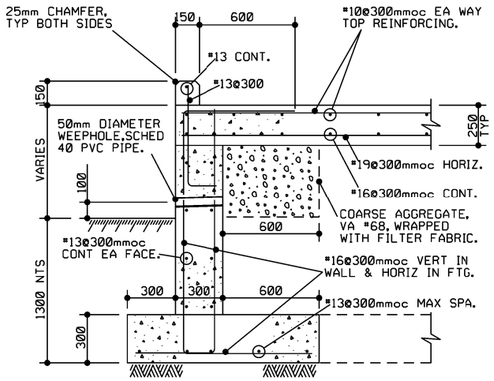

RAMP SIDE WALL SECTION (A / BSP03)
SCALE: 1:20

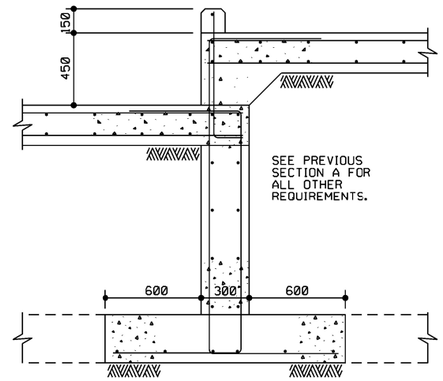

RAMP MIDDLE WALL SECTION (B / BSP03)
SCALE: 1:20

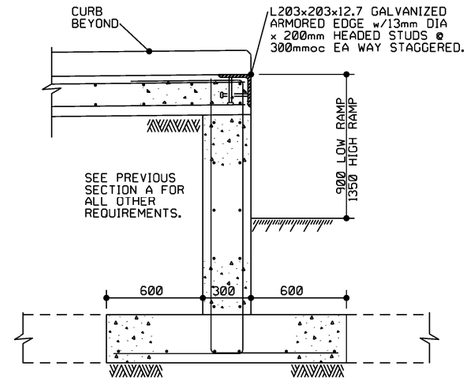

RAMP END WALL SECTION @ DOCK (C / BSP03)
SCALE: 1:20

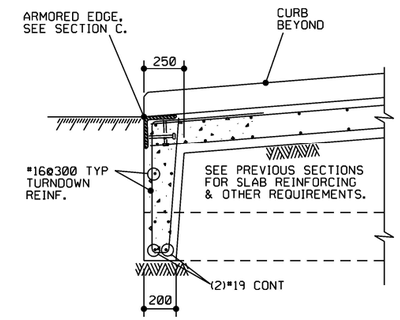

RAMP TURN DOWN SECTION (D / BSP03)
SCALE: 1:20

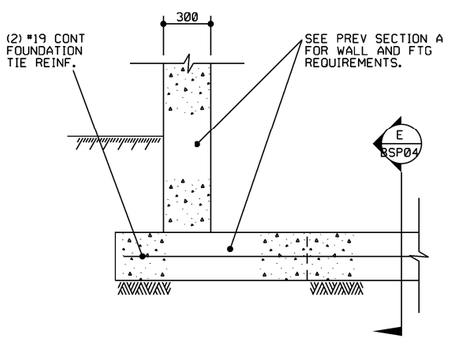

SIDE WALL SECTION @ TIE (A1 / BSP03)
SCALE: 1:20

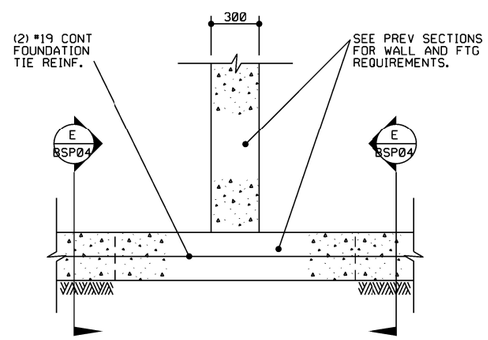

MIDDLE WALL SECTION @ TIE (B1 / BSP03)
SCALE: 1:20

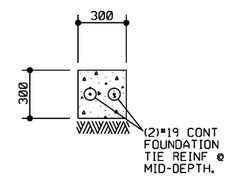

FOUNDATION TIE SECTION (E / BSP04)
SCALE: 1:20

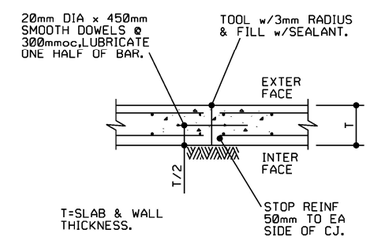

CONTROL JOINT DETAIL (F / BSP03)
SCALE: 1:20

DRAWING NOTES:

1. REFER TO DRAWING NOTES ON PREVIOUS SHEET.
2. REINFORCING HOOKS SHOWN SHALL CONFORM TO ACI STANDARD 90° HOOKS UNO,TYP.

LOADING RAMP SECTIONS AND DETAILS

SCALE: 1:20

1000mm 500mm 0 1m

SCALE: 1:20

ALL DIMENSIONS ARE MILLIMETERS(mm) UNO