SCUFFLETOWN BOTTOMS BOTTOMLAND HARDWOOD WETLAND RESTORATION (KY-20)

1.0 Location

The proposed Scuffletown Bottoms Bottomland Hardwood Wetland Restoration project area is located in Henderson County, Kentucky. The project area lies to the east of the confluence of the Green River and Ohio River. The Scuffletown Bottoms project is located between Ohio River (ORM) mile 774.8 and 784.1. The project site is within the Louisville District, U.S. Army Corps of Engineers (USACE).

2.0 Project Goal

The primary goal of the Scuffletown Bottoms project is the acquisition and restoration of 6,000 to 12,000 acres of Ohio River bottomlands. Long term restoration efforts will include reforestation of bottomland hardwoods, development of seasonally flooded impoundments, and the restoration of natural systems throughout the floodplain. The restored/enhanced Scuffletown Bottoms project area would provide seasonal habitat for migratory birds, especially waterfowl and neotropical migrants; seasonal habitat for fishes and invertebrates; and recreational opportunities for the public.

Page holder for Scuffletown Bottoms Figure.

3.0 Project Description and Rationale

The Scuffletown Bottoms project area consists of approximately 10,200 acres of the lower Green River and Ohio River floodplain of Henderson County, Kentucky. The Scuffletown Bottoms project area is predominantly in agricultural production, and the lands in the project area will be purchased from willing sellers. A portion of these project area lands will be reforested with mast producing bottomland hardwoods. The levee along the western side of the project area adjacent to the Green River would be reconstructed/refurbished, and three new water control structures would be installed in the renovated levee. The water control structures would replace existing dilapidated structures and would be designed to provide optimum water level regulation.

A portion of the floodplain area would be reforested with a mixture of mast producing bottomland hardwood trees, and the entire area would be managed to provide habitat diversity for game and non-game wildlife. A portion of the project area would be maintained as open habitat such as warm season grasslands, food plots, or other wildlife openings. Future development would include the construction/development of moist soil units and/or other wetlands.

4.0 Alternatives to the Proposed Action

It may be feasible to purchase long-term management easements and/or leases from the landowners in the Green and Ohio River floodplain or a combination of land acquisition and easement purchase could be considered. The landowners would benefit from the initial easement purchases and future timber sales, while the state could reduce initial acquisition costs.

5.0 Existing Conditions

Terrestrial/Riparian Habitat: The Scuffletown Bottoms floodplain area is dominated by agriculture, primarily row crops such as corn and soybeans. Approximately 95 percent of the project area is or has recently been in agricultural production.

There is a band of riparian trees along most of the Green River and Ohio River, however this wooded riparian zone is very narrow along some stretches. The dominant species in the riparian community include box elder (*Acer negundo*), black willow (*Salix nigra*), and silver maple (*Acer saccharinum).* Giant ragweed (*Ambrosia trifida*), smartweed (*Polygonum* spp.), cocklebur (*Xanthium strumarium*) and other invasive species dominated the levee adjacent to the Green River and in disturbed/cleared areas that are not in production. There were two small blocks of bottomland hardwood timber remaining in the western end of the project area. The timber in these areas were primarily degraded stands of silver maple, cottonwood (*Populus deltoides*), and black willow, and mast producing species such as oaks, are nearly absent.

Aquatic Habitats: With the exception of a few remnant pools of water in the project area drainage ditches, there are no permanent aquatic habitats present in the project area. Aquatic habitats would be restricted to seasonally flooded drainage ditches, swales, and other minor depressions. The Scuffletown Bottoms area is inundated annually from Green River and Ohio River flood events, especially in late winter and spring. The levees along the western portion of the project area restrict the amount of flooding that could potentially impact the area, and an extensive network of drainage ditches and water control structures aid in the rapid de-watering of the area.

Wetlands: Most of the jurisdictional wetlands in the project area are associated with the bottomland hardwoods in riparian zones adjacent to the Ohio and Green Rivers. In addition,

there may be a few isolated wetlands within the project area, especially adjacent to the interior drainage ways. There are no significant or unique wetlands within the project area.

Federally-Listed Threatened and Endangered Species: According to the U.S. Fish and Wildlife Service (USFWS), there are 11 federally-listed endangered species and 1 federally-listed threatened species known to occur in Henderson County, Kentucky. These species are listed on Table 1.

The riparian corridor adjacent to the Ohio River may provide summer roost habitat for the Indiana bat. Preferred tree species would include a mixture of oaks (*Quercus* spp.), silver maple (*Acer saccharinum*), cottonwood (*Populus deltoides*), and shagbark hickory (*Carya ovata*) (INHS, 1996). The riparian corridor would also provide feeding/foraging habitat for the Indiana bat.

Bald eagles and peregrine falcons may utilize forested areas for roosting/perching habitat and feed in the open water areas. It is unlikely that any nesting activity exists in the project area. All of the mussels are freshwater species that typically inhabit medium to large river systems. The mussels are typically found in habitats with substrates that range from silt to gravel, and in water depths from 0.5 to 8.0 meters. These species are generally associated with moderate to fast flowing water. There does not appear to be suitable habitat for these species in the immediate vicinity of the project area. The American burying beetle is generally associated with upland habitats such as grassland prairie, forest edge, and shrubland. Due to the ongoing intensive agriculture, the use of pesticides, and the fact that the entire project area is in the floodplain, it is unlikely that the beetle would be found on the project area.

According to the USFWS, it is believed that the eastern cougar has been extirpated from Kentucky. Much of the cougar's habitat has been eliminated through deforestation and development. The primary habitat needs for the cougar are large wilderness areas and adequate food sources. Due to lack of suitable habitat, it is highly unlikely that this species exists near the project area.

Table 1. Federally-listed species known to occur in Henderson County, Kentucky.

Common Name	Scientific Name	Federal Status	Potential Habitat Present
eastern cougar	*Felis concolor couguar*	Endangered	No
Indiana bat	*Myotis sodalis*	Endangered	Yes
bald eagle	*Haliaeetus leucocephalis*	Threatened	Yes
peregrine falcon	*Falco peregrinus*	Endangered	Yes
eastern fanshell pearly mussel	*Cyprogenia stegaria*	Endangered	No
tubercled blossom	*Epioblasma torulosa torulosa*	Endangered	No
pink mucket pearly mussel	*Lampsilis abrupta*	Endangered	No
ring pink	*Obovaria retusa*	Endangered	No
white wartyback	*Plethobasus cicatricosus*	Endangered	No
purple cat's paw pearly mussel	*Epioblasma obliquata obliquata*	Endangered	No
fat pocketbook	*Potamilus capax*	Endangered	No
American burying beetle	*Nicrophorus americanus*	Endangered	No

Source: U.S. Fish and Wildlife Service, 1999

6.0 Project Diagram

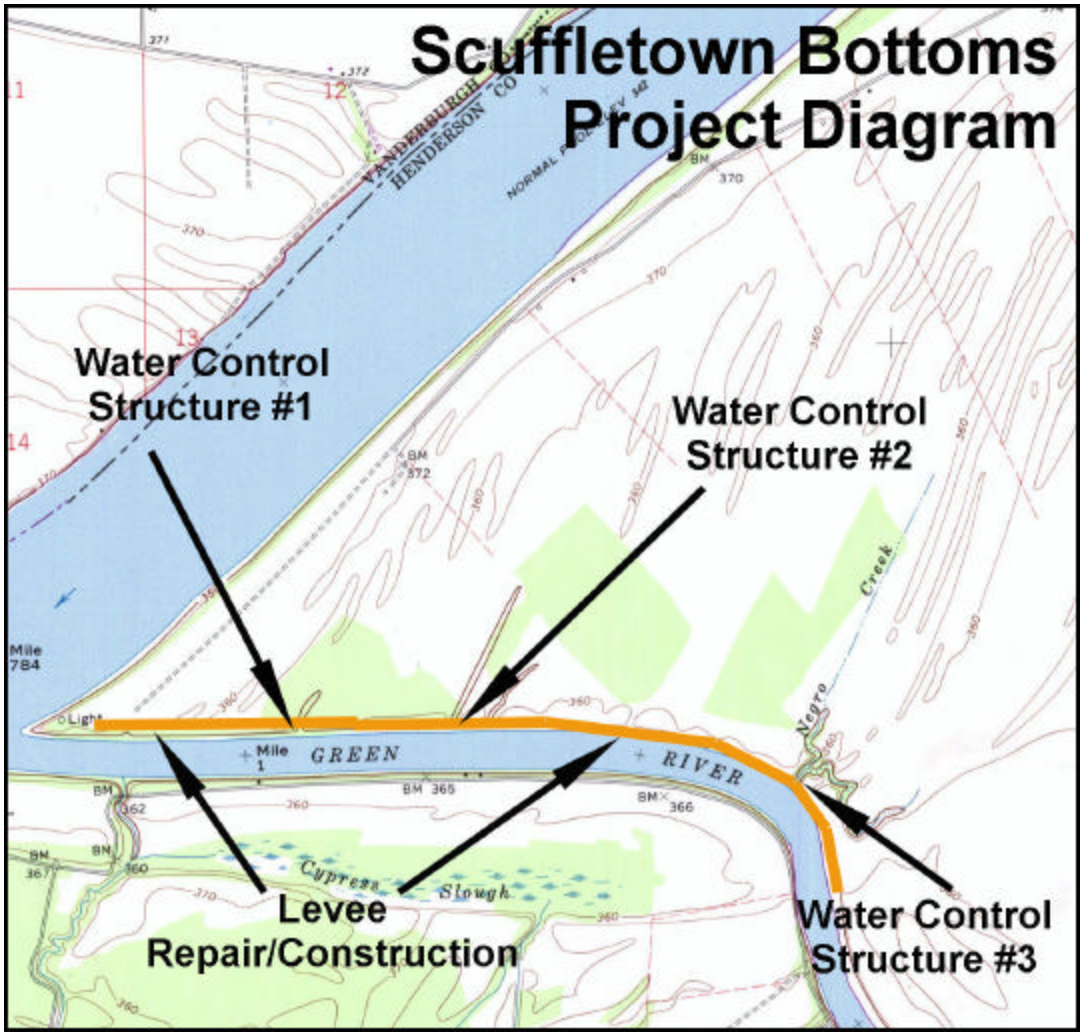

7.0 Engineering Design, Assumptions, and Requirements

7.1 Existing Ecological/Engineering Concern

The restored/enhanced Scuffletown Bottoms project area would provide seasonal habitat for migratory birds, especially waterfowl and neotropical migrants; seasonal habitat for fishes and invertebrates; and recreational opportunities for the public. The key to habitat/resource management in the Scuffletown Bottoms project area would be proper water level control. Water level management for the Scuffletown Bottoms area would be controlled through the levee and water control structures at the western end of the project area. The existing levee and water control structures are currently in need of repair and/or replacement. Therefore, following the initial land acquisition, the levee and water control structures would need to be refurbished.

7.2 Land Acquisition Strategy

Land acquisition for the Scuffletown Bottoms project area would be completed in a phased approach that assigns a hierarchy for land purchases. Although the goal is to purchase any lands from willing sellers within the project area, the acquisition areas would be assigned various levels of priority. The lowest elevation floodplain areas that receive frequent overflow flooding from the Green and Ohio Rivers would be targeted for early acquisition, and it is believed that the landowners in these areas would have the greatest incentive to sell. A project management/master plan would be developed in order to fully plan and implement a project of this magnitude.

Priority 1 Acquisition Area The key to water level management for the Scuffletown Bottoms area would be the levee and water control structures at the western end of the project area. Therefore, the western portion of the project area adjacent to the Green River would be the highest priority for purchase. Following the initial acquisition of approximately 2,000 acres of the western portion of the project area, additional lands would be purchased from willing sellers.

Priority 2 Acquisition Area The second priority for acquisition would be the series of drainage areas in the south-central and southeast portion of the project area. This would include approximately 2,500 acres, and the principal drainageways would be Opossum Creek, Deadman Drain, Griffith Slough Ditch, and Black Slough Ditch.

Priority 3 Acquisition Area The lowest priority areas to be acquired would include the highest average elevations in the project area. These areas would be located in the north-central and northeast portions of the project area. The remainder of the acquisition area would be approximately 5,700 acres.

7.3 Levee Repair/Construction

The existing levee would be removed, and a new levee constructed. The levee would be 11,000-feet long, and contain three water control structures. The levee would be 11-feet tall with a top width of 8 feet, to allow for vehicle access. An inner core of cohesive material (impermeable), 11 feet high, with 1:1 side slopes would be used to control seepage. The remainder of the levee would be graded to 3:1 side slopes. The levee is not designed to protect from a certain storm event (i.e. 50-Year Storm). It is anticipated that the levee would overtop every few years. For this reason, yearly inspection is required to maintain the integrity of the levee.

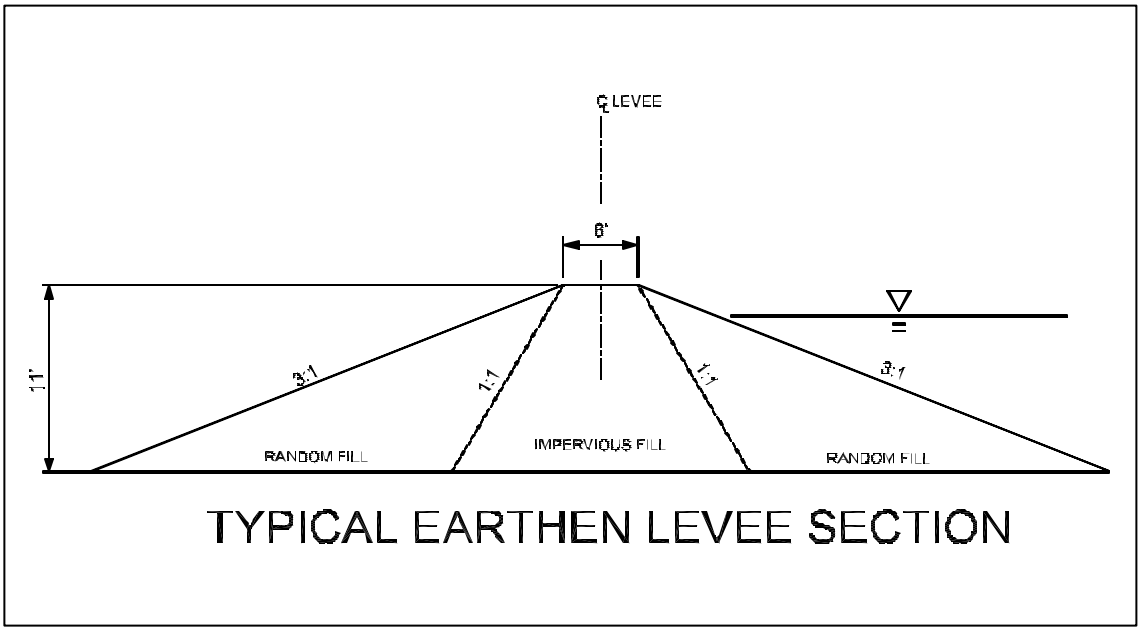

7.4 Water Control Structure Replacement/Construction

The two existing water control structures would be removed. Three new water control structures would be constructed to manage the water levels in Scuffletown Bottoms. The water control structures would be tied into the new levee as shown in the project diagram. An 81-foot-wide concrete weir would be place at the top of the structure. This weir would be 3 feet below the top of the levee. The weir would provide stabilized locations for overtopping. Three 5 feet by 5 feet precast concrete culverts, 80 feet in length, would be used as the primary watercourse. Each culvert opening is fitted with a steel gate to allow the water level to be regulated. Removable gate rails are provided to operate the gates. The truss system attaches to the top of the culvert, and the gates are lifted with a winch and pulley. The gates are able to remain in an open position with a locking cable. In addition to the culverts, a pump station is provided at each structure to allow for water control during high and low water periods. The pump stations are equipped with 150 horsepower pumps, which can pump 4,000 GPM. The pump station can be setup to pump in either direction to allow for maximum water control. The areas below the weir and around the culverts would be protected from scour with grouted riprap.

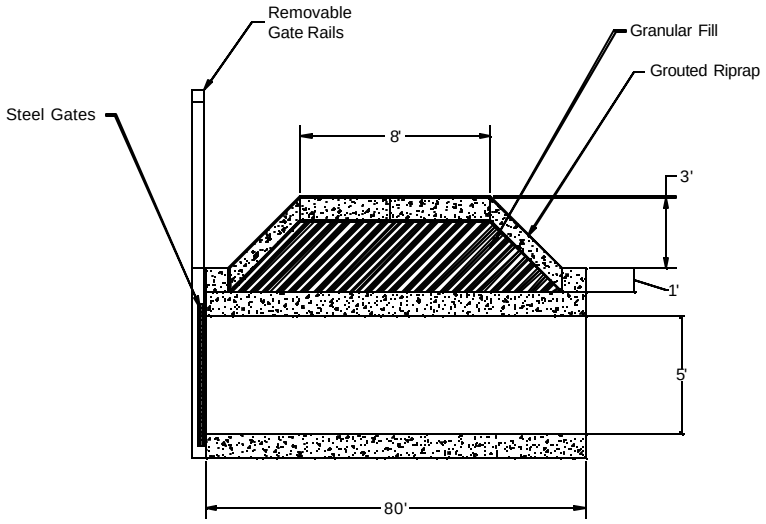

Section A-A

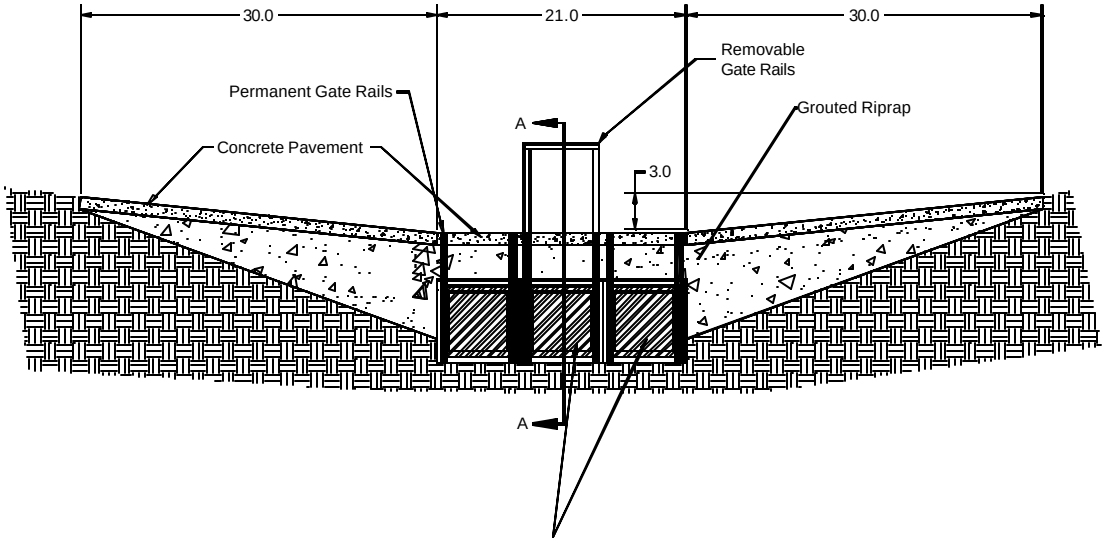

Water Control Structure

7.5 Bottomland Hardwood Reforestation

All of the Scuffletown Bottoms acquisition area is in the Ohio and Green River floodplain, and over 95 percent of this area is currently in agricultural production. Following the initial acquisition of approximately 2,000 acres, approximately 40 percent of the cleared area (760 acres) would be reforested with native mast producing bottomland hardwood trees. Approximately 40-60 percent of the remaining acquisition areas would be reforested with native bottomland hardwood forest. The project management/master plan would identify the planting strategies for the project.

Soil types, hydrology, and terrain position would be the primary factors considered when selecting the tree species to be planted. A detailed planting design, which would be part of the overall project management/master plan, should be developed in order to insure that the planting effort is successful. Typical bottomland species to be planted in the floodplain area would include pin oak (*Quercus palustris*), swamp chestnut oak (*Quercus michauxii*), swamp white oak (*Quercus bicolor*), pecan (*Carya illinoensis*), and shagbark hickory (*Carya ovata*). Aggressive light mast producing species, such as silver maple (*Acer saccharinum*), green ash (*Fraxinus pennsylvanica*), sycamore (*Platanus occidentalis*), and/or willows (*Salix* spp), would be expected to regenerate naturally.

Open areas that are not reforested would be maintained in order to provide habitat diversity. These open areas may be maintained by mowing, burning, and/or tilling. Depending upon the type of wildlife management prescribed in the project management plan, other openings such as foodplots or agricultural out-leasing may be desirable. Following the land acquisition, areas most conducive to the establishment of moist soil units would be developed.

7.6 Planning/Engineering Assumptions

- All cohesive materials (impermeable) for the levee can be obtain onsite.
- The levee is not designed to contain a specific design storm event. It is anticipated the levee would be overtopped. Yearly inspection would be required to ensure the integrity of the levee.

8.0 Cost Estimate (Construction)

Levee repair/construction, water control structure replacement/construction, land acquisition, and reforestation costs for the proposed project are contained on Table 2. A detailed MCACES cost estimate for the proposed project is included in Appendix D.

Table 2. Project Costs.

Item	Cost
Prepare Project Management/Master Plan	$40,000.00
Priority 1 Land Acquisition (2,000 acres)	$
Reforestation of 40% of Priority 1 open area (760 acres)	$166,700.00
Priority 2 Land Acquisition (2,500 acres)	$
Priority 3 Land Acquisition (5,700 acres)	$
Levee Repair/Construction	$1,207,000.00
Water Control Structure Replacement/Construction	$479,600.00
Mobilization	$80,000
TOTAL	**$**

9.0 Schedule

The estimated acquisition, development, and construction time is shown on Table 3.

Table 3. Acquisition, Development, and Construction Schedule.

Item	Time
Project Management/Master Plan	1 year
Priority 1 Acquisition (2,000 acres)	1-5 years
Priority 1 Reforestation/Development	1-10 years
Priority 2 Acquisition (2,500 acres)	1-15 years
Priority 3 Acquisition (?? acres)	1-30 years
Levee Repair/Construction	1-5 Years
Water Control Structure Replacement/Construction	1-5 Years
TOTAL	**30 Years**

10.0 Expected Ecological Benefits

Terrestrial/Riparian Habitat: The Scuffletown Bottoms project would result in long-term beneficial impacts to terrestrial/riparian resources. The acquisition and preservation of existing riparian forest along the Green and Ohio Rivers would be considered a long-term beneficial impact to terrestrial/riparian resources. The acquisition, reforestation, and management of the floodplain/riparian area would be beneficial to many game and nongame species of wildlife. The conversion of agricultural lands to bottomland forest, coupled with the perpetual management of the area for wildlife by the Kentucky Department of Fish and Wildlife Resources would result in sustained long-term beneficial impacts to terrestrial resources.

The acquisition, reforestation, preservation, and management of bottomland areas would benefit many species of wildlife. The establishment of a vegetated riparian corridor would provide habitat for resident and migratory wildlife species and serve as a travel corridor. Reforestation would reduce overall forest fragmentation on the area and provide habitat for many species. Likely species to be beneficially affected would include: resident bird species, such as northern bobwhite and turkey; neotropical migratory birds, such as warblers, vireos, and sparrows; and raptors, such as red-tailed hawk, northern harrier, sharp-shinned hawk, and barred owl. Resident mammals, such as white-tailed deer, eastern cottontail, and eastern gray squirrel; and resident reptiles and amphibians would also benefit from the proposed project. In addition, important long-term beneficial impacts to migratory waterfowl, especially wood ducks, mallards, and Canada geese would be anticipated.

Aquatic Habitats: Long-term beneficial impacts to aquatic resources would be anticipated as a result of implementing the proposed project. The preservation and reforestation of the wooded riparian corridor along the Green River and Ohio River shoreline would reduce potential

streambank erosion. The conversion of agricultural land to forest would indirectly improve water quality by reducing the amount of silt and contaminants from entering the Green and Ohio Rivers via stormwater runoff. The reforestation in the internal riparian drainageways, such as Negro Creek, Opossum Creek, and Deadman Drain, would reduce erosion and scouring effects along the creeks.

The creation of seasonally flooded habitats would benefit aquatic resources on the area by providing nursery, foraging, spawning, and refuge areas for many fish species. Reforestation would also reduce the amount of erosion and sediment laden runoff that enters the watershed.

Wetlands: Restoration and creation of bottomland hardwood wetlands, moist soil units, and other seasonally flooded habitats would add to the amount of

wetlands present on the project area. The benefits of these newly created/restored wetlands would include improved water quality, floodflow retention/reduction, groundwater recharge, and provide habitat for waterfowl and other wetland dependent species.

Federally-Listed Threatened and Endangered Species: Bottomland hardwood restoration, reforestation, protection, and long-term management would benefit endangered Indiana bats by providing summer roost and foraging habitat on the project area. Control of bank erosion would reduce sedimentation inputs into the river and potentially reduce impacts to endangered mussel species downstream of the project area.

Socioeconomic Resources: There would be long-term beneficial impacts to socioeconomic resources as a result of implementing the proposed project. Long-term socioeconomic benefits would be realized through improved recreational opportunities for hunting, fishing, wildlife observation, and other non-consumptive uses. Local businesses would receive indirect benefits from local expenditures associated with outdoor recreation purchases, such as hunting gear, fishing supplies, gas, food, and other needs.

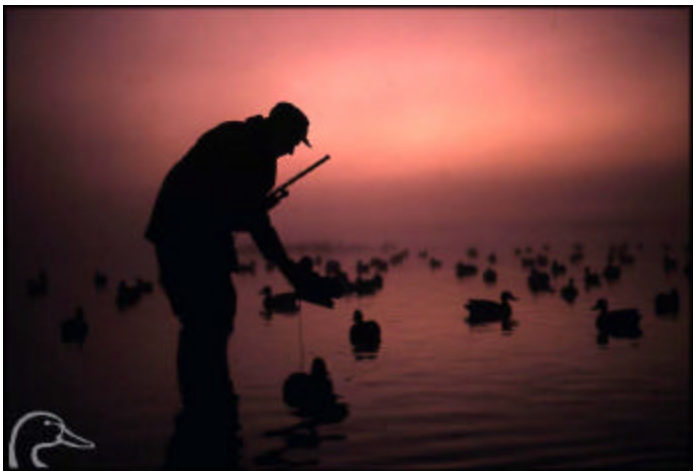

11.0 Potential Adverse Environmental Impacts

Terrestrial/Riparian Habitat: There would be no reasonably foreseeable adverse impacts to terrestrial or riparian resources as a result of implementing the proposed project

Aquatic Habitats: There would be short-term adverse water quality impacts associated with the construction/rehabilitation of the Green River levee and water control structures in the western portion of the project area. These impacts would be minimal, especially if proper soil erosion and sediment controls are in place.

There would be no other reasonably foreseeable adverse impacts to aquatic resources as a result of implementing the proposed project.

Wetlands: There would be no reasonably foreseeable adverse impacts to jurisdictional wetlands as a result of implementing the proposed project.

Federally-Listed Threatened and Endangered Species: There would be no reasonably foreseeable adverse impacts to federally-listed threatened or endangered species as a result of implementing the proposed project.

Socioeconomic Resources: There would be long-term direct adverse socioeconomic impacts to local farmers as a result of implementing the proposed project. There would be indirect long-term adverse impacts to local businesses that support the agricultural community.

12.0 Mitigation

No substantial mitigation measures would be necessary to complete this project.

13.0 Preliminary Operation and Maintenance Costs:

Operation and Maintenance costs are summarized on Table 4.

Table 4. Operation and Maintenance Costs

Maintenance	Frequency	Costs
Levee Inspection	1 Year	$3,000
Levee maintenance	10 Years	$25,000
Water control structure maintenance	1 Year	$5,000

14.0 Potential Cost Share Sponsor(s)

- Kentucky Department of Fish and Wildlife Resources
- Kentucky Division of Forestry
- Kentucky Land Heritage Trust
- North American Conservation Plan
- The Nature Conservancy
- Ducks Unlimited
- Partners In Flight
- Mellon Foundation

15.0 Expected Life of the Project

As presently envisioned the Scuffletown Bottoms project area would be managed in perpetuity for the benefit of natural resources by the Kentucky Department of Fish and Wildlife.

16.0 Hazardous, Toxic, and Radiological Waste Considerations

Potential impacts of hazardous, toxic, and radiological waste (HTRW) at the site were visually assessed during a site visit and further assessed via a database search of HTRW records in the site area.

Site Inspection Findings

The Scuffletown Bottoms project area is on the south side of the Ohio River between river mile 780-784 in Henderson County, Kentucky. The town of Scuffletown, Kentucky is located on the Ohio River on the northeast side of the project area. The Green River flows along the west and southern part of Scuffletown Bottoms and the Ohio River constitutes the northern boundary of the project area.

The following environmental conditions were considered when conducting the July 14, 1999 project area inspection:

- Suspicious/Unusual Odors;
- Discolored Soil;
- Distressed Vegetation;
- Dirt/Debris Mounds;
- Ground Depressions;
- Oil Staining;
- Above Ground Storage Tanks (ASTs);
- Underground Storage Tanks (USTs);
- Landfills/Wastepiles;
- Impoundments/Lagoons;
- Drum/Container Storage;
- Electrical Transformers;
- Standpipes/Vent pipes;
- Surface Water Discharges;
- Power or Pipelines;
- Mining/Logging; and
- Other.

The Scuffletown Bottoms consist primarily of row crops, with some mixed hardwoods along the edges of the Green River and Ohio River. Drainage ditches with associated water control structures dewater the area. Multiple oil wells were observed in operation in the project area. With the exception of drainage ditches, water control structures, and oil wells, none of the other environmental conditions listed above were observed in the project area.

Risk Management Data Search

A search of available environmental records was conducted by Environmental Data Resources, Inc. (EDR). The search complied with ASTM Standard Practice for Environmental Site Assessments, E 1527-97. This search report is presented in Appendix B. The area searched is outlined on the folded map contained with the report found in Appendix B. The search area consisted of the project site and a one mile buffer beyond the project boundary. The enlarged site map in Appendix B outlines the area investigated for potential environmental conditions. The databases searched for different environmental items (e.g., USTs, NPL sites, etc.) are as follows:

Databases Searched:
1. **NPL:** National Priority List
2. **Delisted NPL:** Contaminated sites removed from the NPL.
3. **RCRIS-TSD:** Resource Conservation and Recovery Information System
4. **SHWS:** State Hazardous Waste Sites
5. **CERCLIS:** Comprehensive Environmental Response, Compensation, and Liability Information System
6. **CERC-NFRAP:** Comprehensive Environmental Response, Compensation, and Liability Information System
7. **CORRACTS:** Corrective Action Report
8. **SWF/LF:** Available Disposal for Solid Waste in Illinois- Solid Waste Landfills Subject to State Surcharge
9. **LUST:** Leaking Underground Storage Tank
10. **UST:** Underground Storage Tank
11. **RAATS:** RCRA Administrative Tracking System
12. **RCRIS-SQG:** Resource Conservation and Recovery Information System for Small Quantity Generators
13. **RCRIS-LQG:** Resource Conservation and Recovery Information System for Large Quantity Generators
14. **HMIRS:** Hazardous Materials Reporting System
15. **PADS:** PCB Activity Database System
16. **ERNS:** Emergency Response Notification System
17. **FINDS:** Facility Index System/Facility Identification Initiative program Summary Report
18. **TRIS:** Toxic Chemical Release Inventory System
19. **NPL Lien:** NPL Liens
20. **TSCA:** Toxic Substances Control Act
21. **MLTS:** Material Licensing Tracking System
22. **ROD:** Record of Decision
23. **CONSENT:** Superfund (CERCLA) Consent Decrees
24. **MINES:** Mines Master Index File

HTRW Findings and Conclusions

An inspection of the project site noted the presence of oil wells and drainage ditches and several water control structures. The drainage ditches and water control structures do not pose an HTRW concern; however, oil wells do present the potential for hydrocarbon contamination of soils from spills around oil water separators, produced water discharges, and disposal sites of oily sludges from tanks/vessels at the oil production sites. Abandoned drilling pits are typically present near each well-head. When present, these pits typically contain a combination of drill muds and cuttings that can have high metal concentrations and have associated soils contaminated with petroleum from initial production, produced water, and oily sludges. Oil contamination of groundwater from leaks in production casing is a potential at any oil production site. Habitat restoration projects in the bottomland should avoid active and abandoned oil production areas if at all possible. Aside from the observation of oil wells during the site inspection, the environmental databases searched in the project area, and a one mile buffer beyond the project boundary, revealed no evidence of recognized environmental conditions in connection with this project site.

17.0 References

References:	
INHS, 1996	Illinois Natural History Survey Reports, March-April 1996. Survey Document #2152. Center for Biodiversity (J. Hofmann).
USFWS, 1999	U.S. Fish and Wildlife Service, August 5, 1999. Federally Endangered, Threatened and Proposed Species, Kentucky.

APPENDIX A Threatened & Endangered Species

APPENDIX B Hazardous Toxic and Radiological Wastes

APPENDIX C Plan Formulation and Incremental Analysis Checklist

Project Site Location: The proposed Scuffletown Bottoms Bottomland Hardwood Wetland Restoration project area is located in Henderson County, Kentucky. The project area lies to the east of the confluence of the Green River and Ohio River. The Scuffletown Bottoms project is located between Ohio River (ORM) mile 774.8 and 784.1. The project site is within the Louisville District, U.S. Army Corps of Engineers (USACE).

Description of Plan Selected: The primary goal of the Scuffletown Bottoms project is the acquisition and restoration of 6,000 to 12,000 acres of Ohio River bottomlands. Long term restoration efforts will include reforestation of bottomland hardwoods, development of seasonally flooded impoundments, and the restoration of natural systems throughout the floodplain. The restored/enhanced Scuffletown Bottoms project area will provide seasonal habitat for migratory birds, especially waterfowl and neotropical migrants; seasonal habitat for fishes and invertebrates; and recreational opportunities for the public.

Alternatives of the Selected Plan:

Smaller Size Plans Possible? Yes and description

Reduce the amount of land purchased.

Larger Size Plan Possible? Yes and description

Increase the amount of land purchased.

Other alternatives? Yes

It may be feasible to purchase long-term management easements and/or leases from the landowners in the Green and Ohio River Floodplain. The landowners would benefit from the initial easement purchases and future timber sales, while the state could reduce initial acquisition costs.

Restore/Enhance/Protect Terrestrial Habitats? Yes **Objective numbers met** T1, T3

Restore, Enhance, & Protect Wetlands? Yes **Objective numbers met** W1

Restore/Enhance/Protect Aquatic Habitats? Yes **Objective numbers met** A8

Type species benefited: Resident and migratory wildlife, especially waterfowl.
Endangered species benefited: Potential benefits to Indiana bats.

Can estimated amount of habitat units be determined: Yes Initially 2,000 acres would be restored, followed by 2,500 acres, and possibly additional acreage.

Plan acceptable to Resources Agencies?
U.S. Fish & Wildlife Service?
State Department of Natural Resources? Yes Kentucky Department of Fish and Wildlife Resources
Plan considered complete? Yes **Connected to other plans for restoration?**
Real Estate owned by State Agency? No **Federal Agency?** No
Real Estate privately owned? Yes
If privately owned, what is status of future acquisition? Unknown

Does this plan contribute significantly to the ecosystem structure or function requiring restoration? What goal or values does it meet in the Ecosystem Restoration Plan?

Yes The plan provides additional habitat and habitat diversity for terrestrial species.

Is this restoration plan a part of restoration projects planned by other agencies? (i.e. North American Waterfowl Management Plan, etc.)

Unkown. This area should be considered for inclusion in the North American Waterfowl Management Plan.

In agencies opinion is the plan the most cost effective plan that can be implemented at this location?

Can this plan be implemented more cost effectively by another agency or institution?
Yes / No
Who:

From an incremental cost basis are there any features in this plan that would make the project more expensive than a typical project of the same nature? For embayment type plans is there excessive haul distance to disposal site? More expensive type disposal? Spoil that requires special handling/disposal?

Potential Project Sponsor:

Government Entity:_____
Non-government Entity _____

Corps Contractor _____Date_____

U.S. Fish & Wildlife Representative _____Date_____

State Agency Representative _____Date _____

U.S. Army Corps of Engineers Representative _____Date _____

Terrestrial Habitat Objectives

T1 Riparian Corridors

T2 Islands

T3 Floodplains

T4 Other unique habitats (canebrakes, river bluffs, etc.)

Wetland Habitat Objectives

W1 Forested Wetlands: Bottomland Hardwoods

W2 Forested Wetlands: Cypress/Tupelo Swamps and other unique forested wetlands

W3 Scrub/Shrub Emergent Wetlands: isolated from the river except during high water and contiguous (includes scrub/shrub wetlands in embayments and island sloughs)

Aquatic Habitat Objectives

A1 Backwaters (sloughs, embayments, oxbows, bayous, etc.)

A2 Riverine submerged and aquatic vegetation

A3 Sand and gravel bars

A4 Riffles/Runs (tailwater)

A5 Pools (deep water, slow velocity, soft substrate)

A6 Side Channel/Back Channel Habitat

A7 Fish Passage

A8 Riparian Enhancement/Protection

APPENDIX D Micro Computer-Aided Cost Engineering System (MCACES)