ATTACHMENT 1 COE ID #200201241

TREASURE ISLAND BIKEWAY

CHOICE ONE ENGINEERING
440 E. HOEWISHER ROAD
SIDNEY, OHIO 45365
(937) 497-0200 • FAX (937) 497-0300
Email: coec@bright.net

VICINITY MAP - TROY QUAD

ATTACHMENT 2 COE ID #200201241

TREASURE ISLAND BIKEWAY

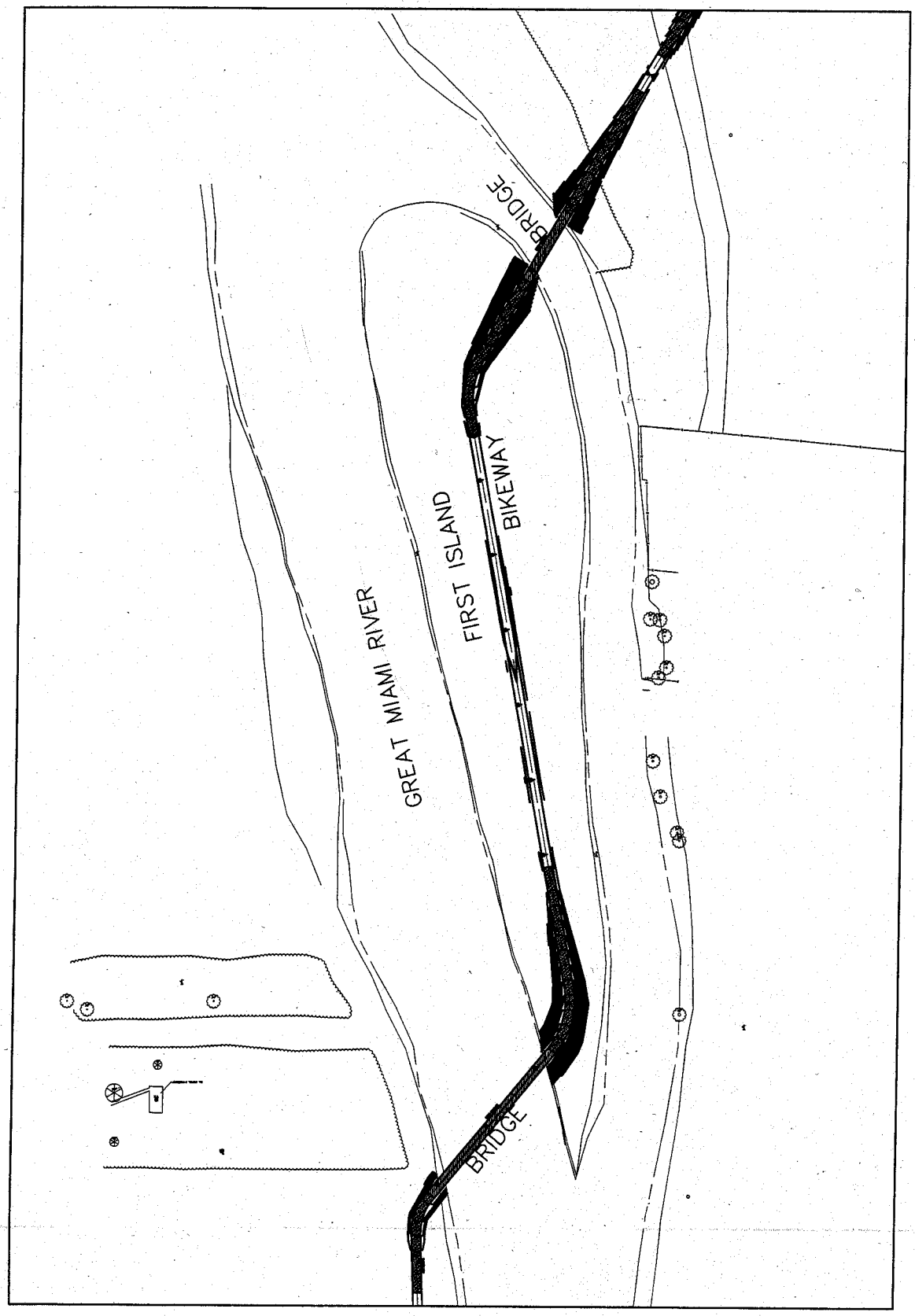

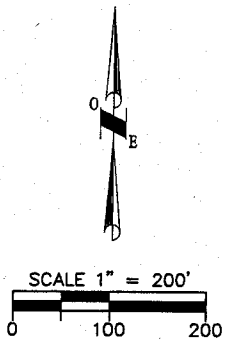

CHOICE ONE ENGINEERING
113 N. OHIO AVE. • SUITE 200
SIDNEY, OHIO 45365
(937) 497-0200 • FAX (937) 497-0300
Email: coec@bright.net

PROJECT SITE MAP

ATTACHMENT 3 COE ID #200201241

TREASURE ISLAND BIKEWAY

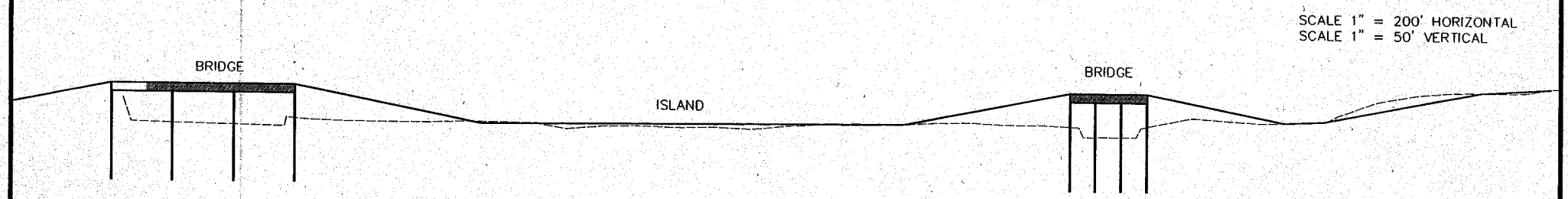

SCALE 1" = 200' HORIZONTAL
SCALE 1" = 50' VERTICAL

CHOICE ONE ENGINEERING
440 E. HOEWISHER ROAD
SIDNEY, OHIO 45365
(937) 497-0200 • FAX (937) 497-0300
Email: coec@bright.net

CROSS-SECTION VIEW

ATTACHMENT #4 COE ID #200201241

TREASURE ISLAND BIKEWAY

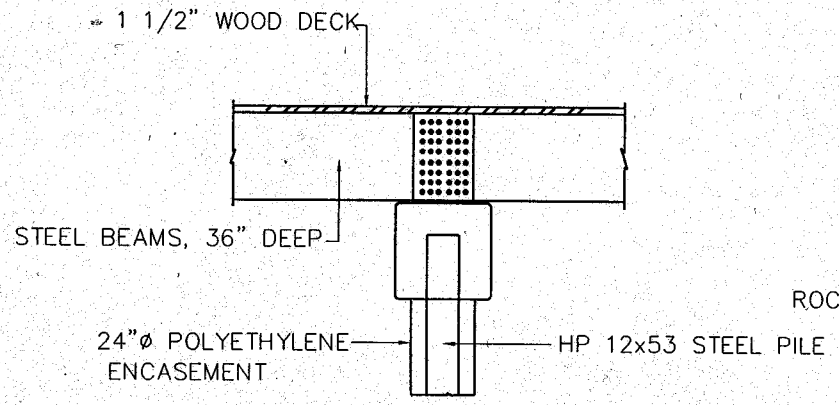

PIER DETAIL

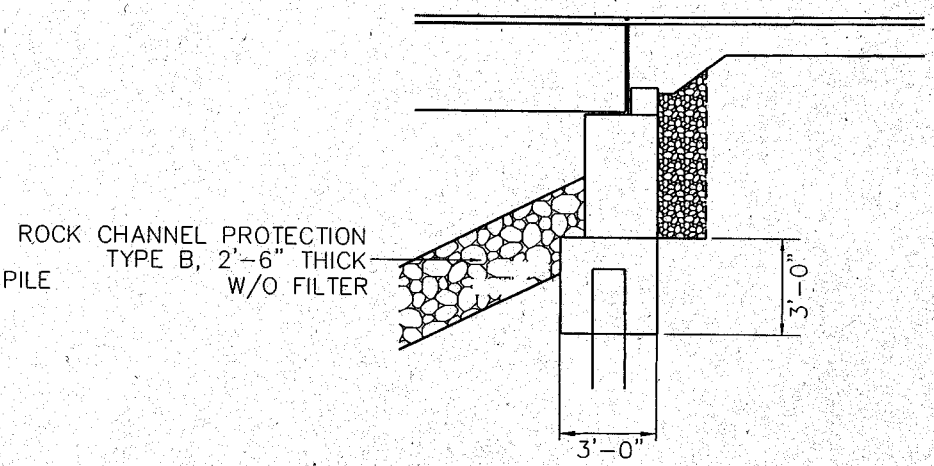

ABUTMENT DETAIL

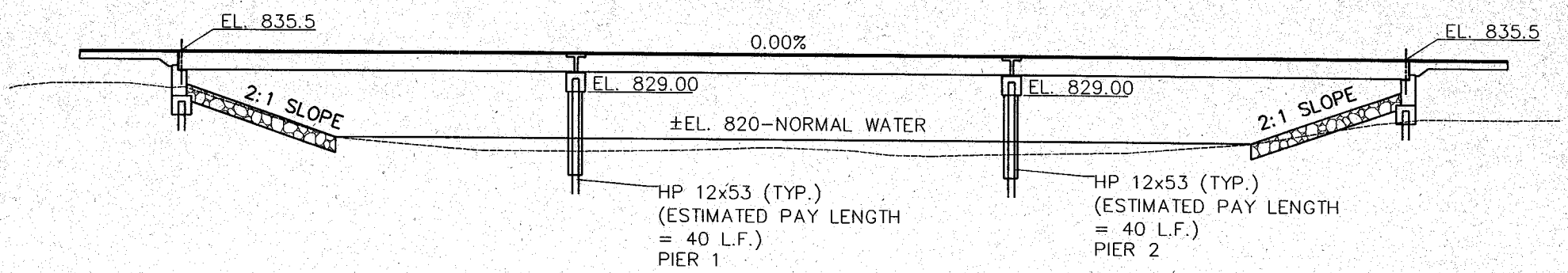

CROSS-SECTION VIEW

NOTES:
1. ALL FILL MATERIAL WILL BE TAKEN FROM WITHIN THE TAYLORSVILLE STORAGE AREA
2. ALL COFFERDAMS WILL BE CLEAN STONE FILL AND WILL BE COMPLETELY REMOVED AT THE COMPLETION OF WORK
3. COFFERDAMS WILL BE APPROXIMATELY 30'x100'
4. THE DOWNSTREAM LOW HEAD DAM WILL BE RELEASED TO COMPLETE THE WORK

CHOICE ONE ENGINEERING
440 E. HOEWISHER ROAD
SIDNEY, OHIO 45365
(937) 497-0200 • FAX (937) 497-0300
Email: coec@bright.net