Project ID No. 200301311
Christopher Rybolt
Ohio River at Mile 486.6
Private Boat Dock
Page 1 of 3

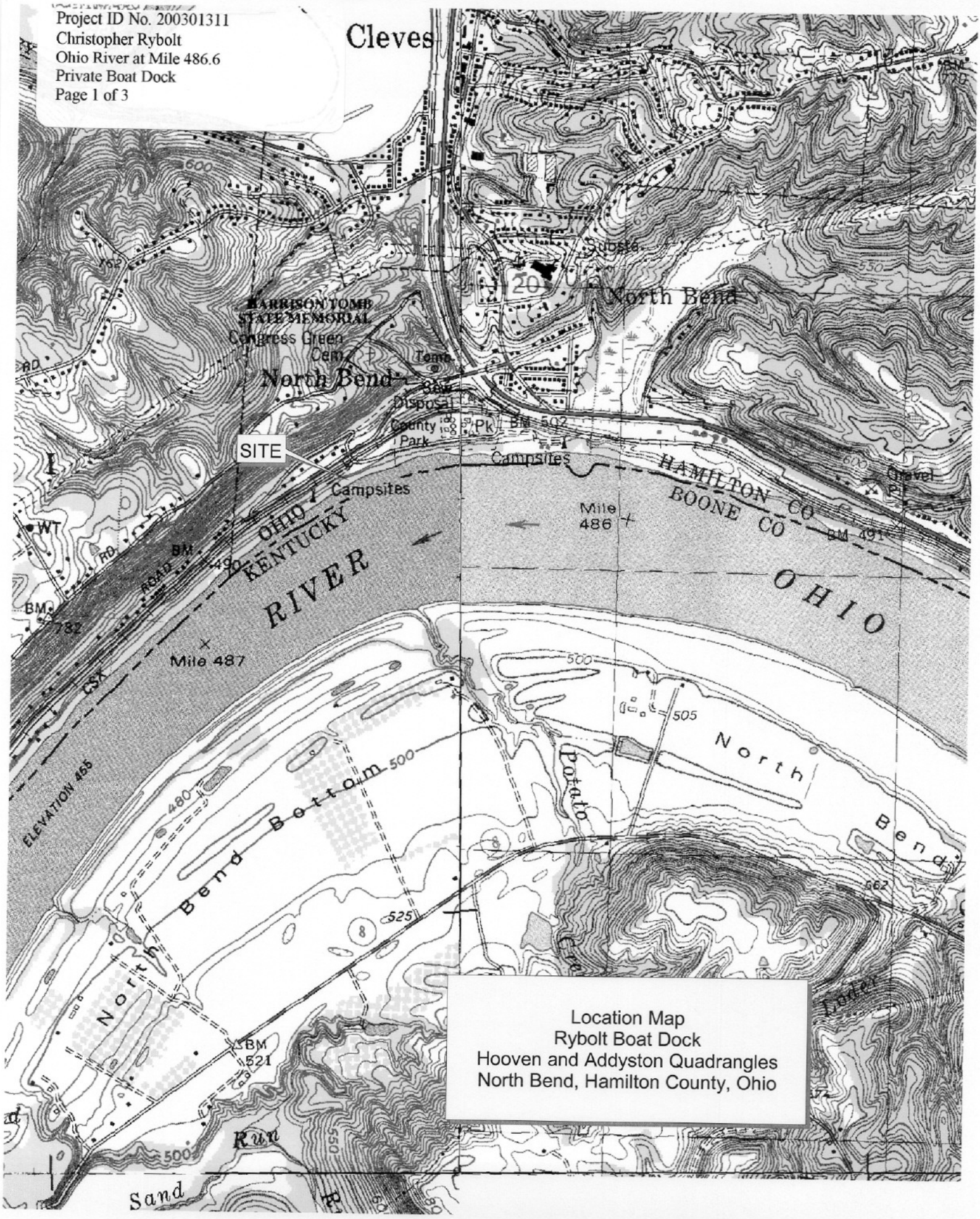

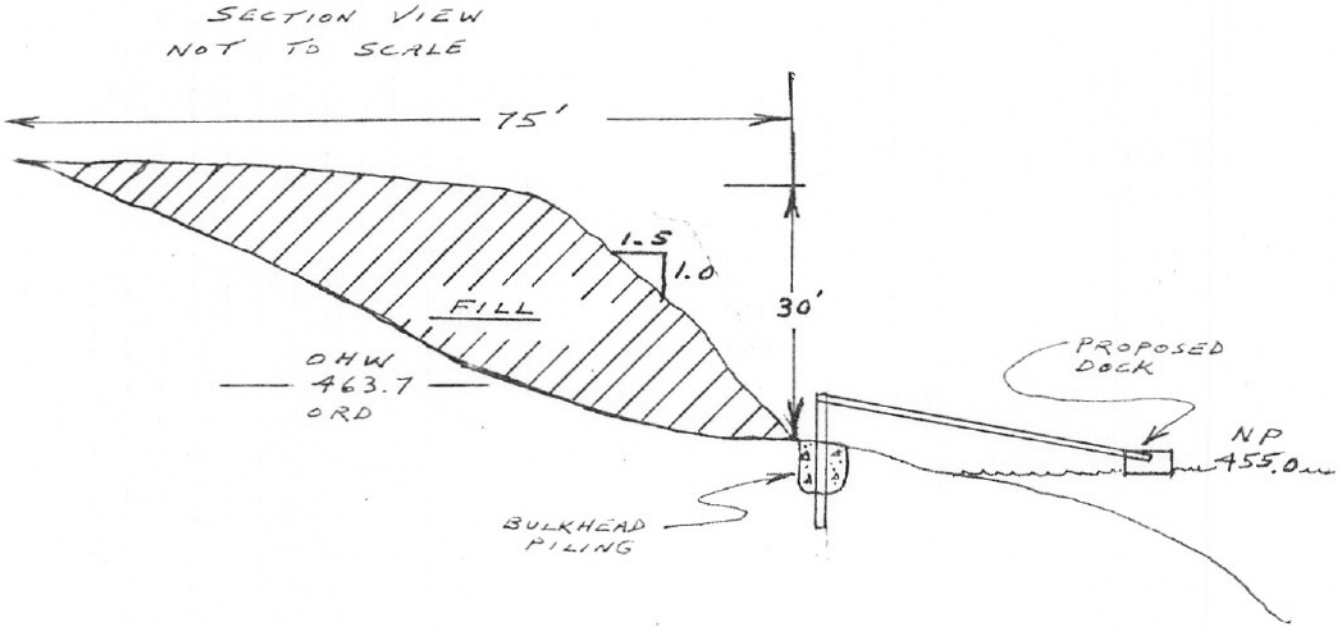
SECTION VIEW
NOT TO SCALE
75'
1.5
1.0
FILL
30'
OHW
463.7
ORD
PROPOSED
DOCK
NP
455.0
BULKHEAD
PILING

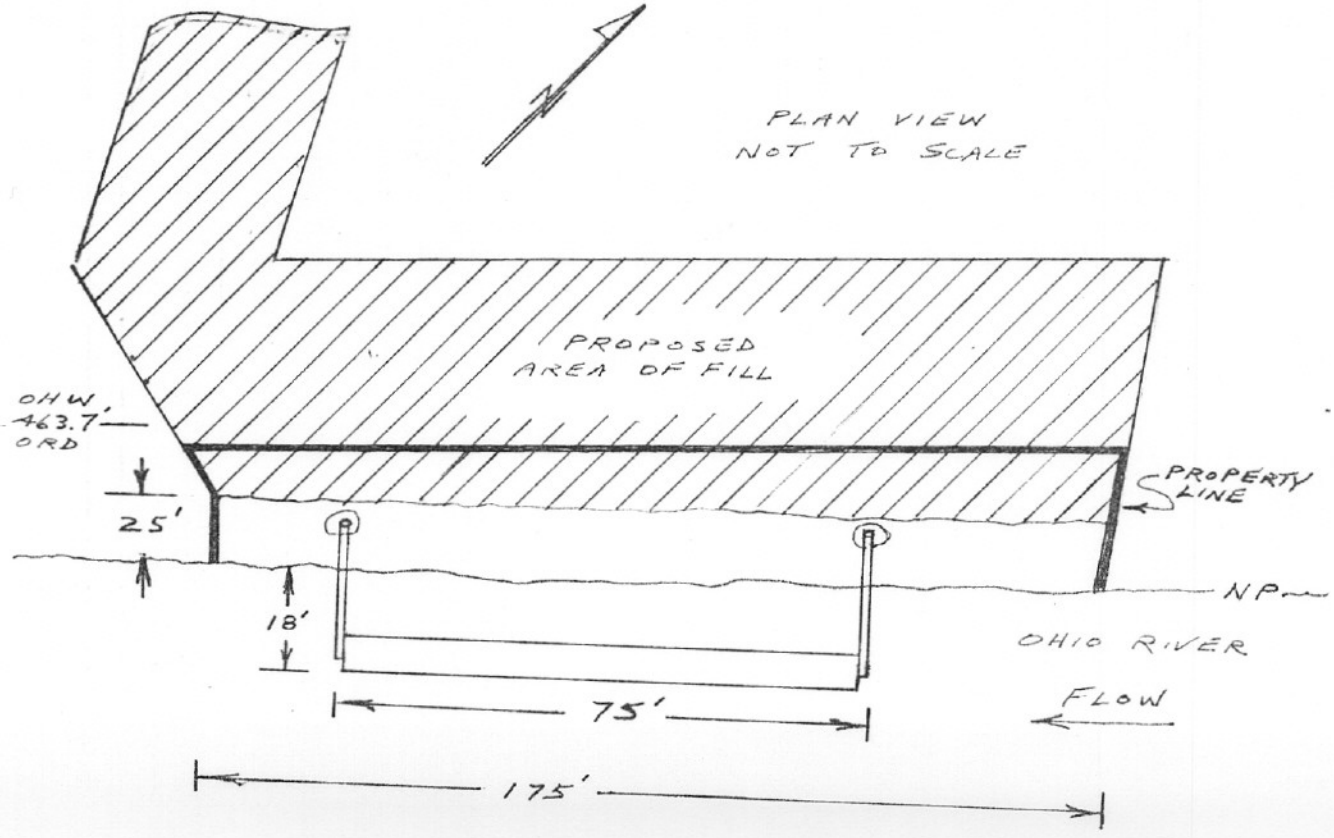
PLAN VIEW
NOT TO SCALE
PROPOSED
AREA OF FILL
OHW,
463.7'
ORD
25'
PROPERTY
LINE
NP
18'
OHIO RIVER
FLOW
75'
175'

CR
12-10-03

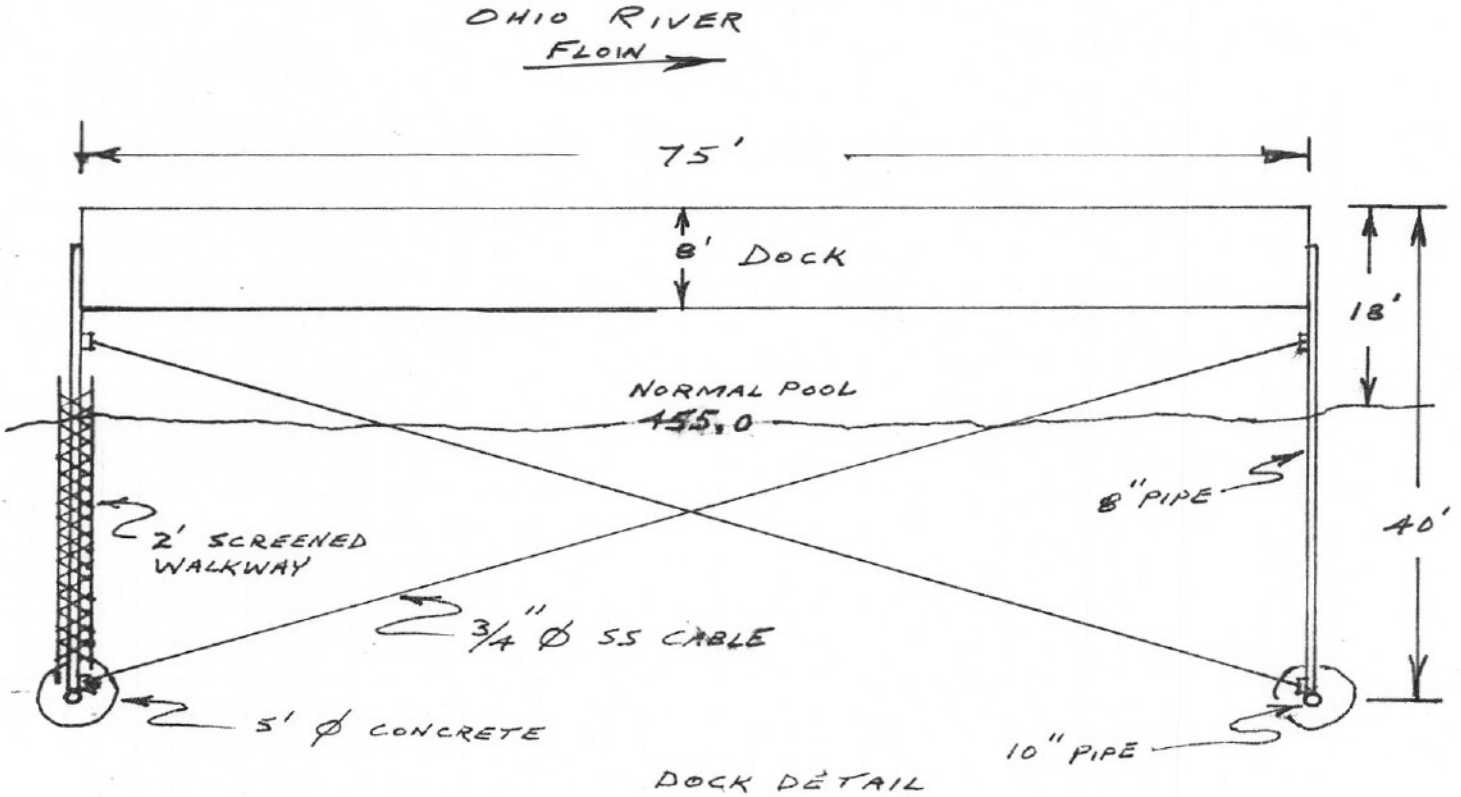

DOCK DETAIL
NOT TO SCALE

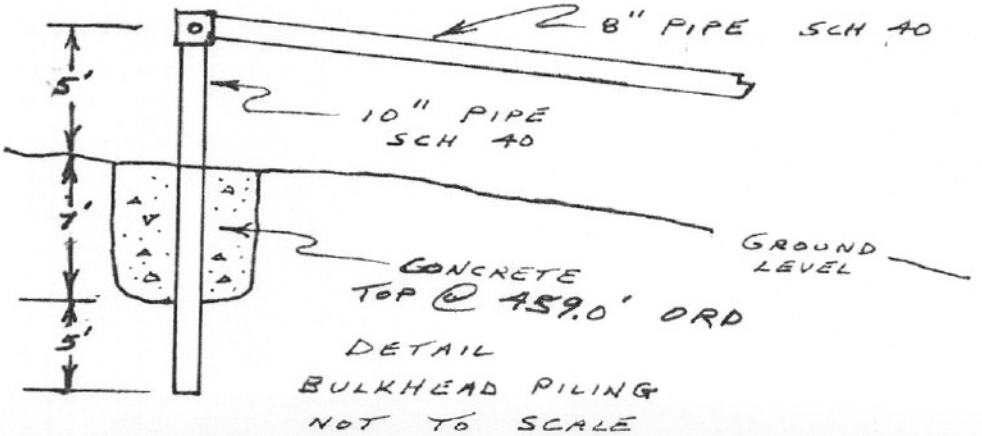

DETAIL
BULKHEAD PILING
NOT TO SCALE

C.R.
12-10-03