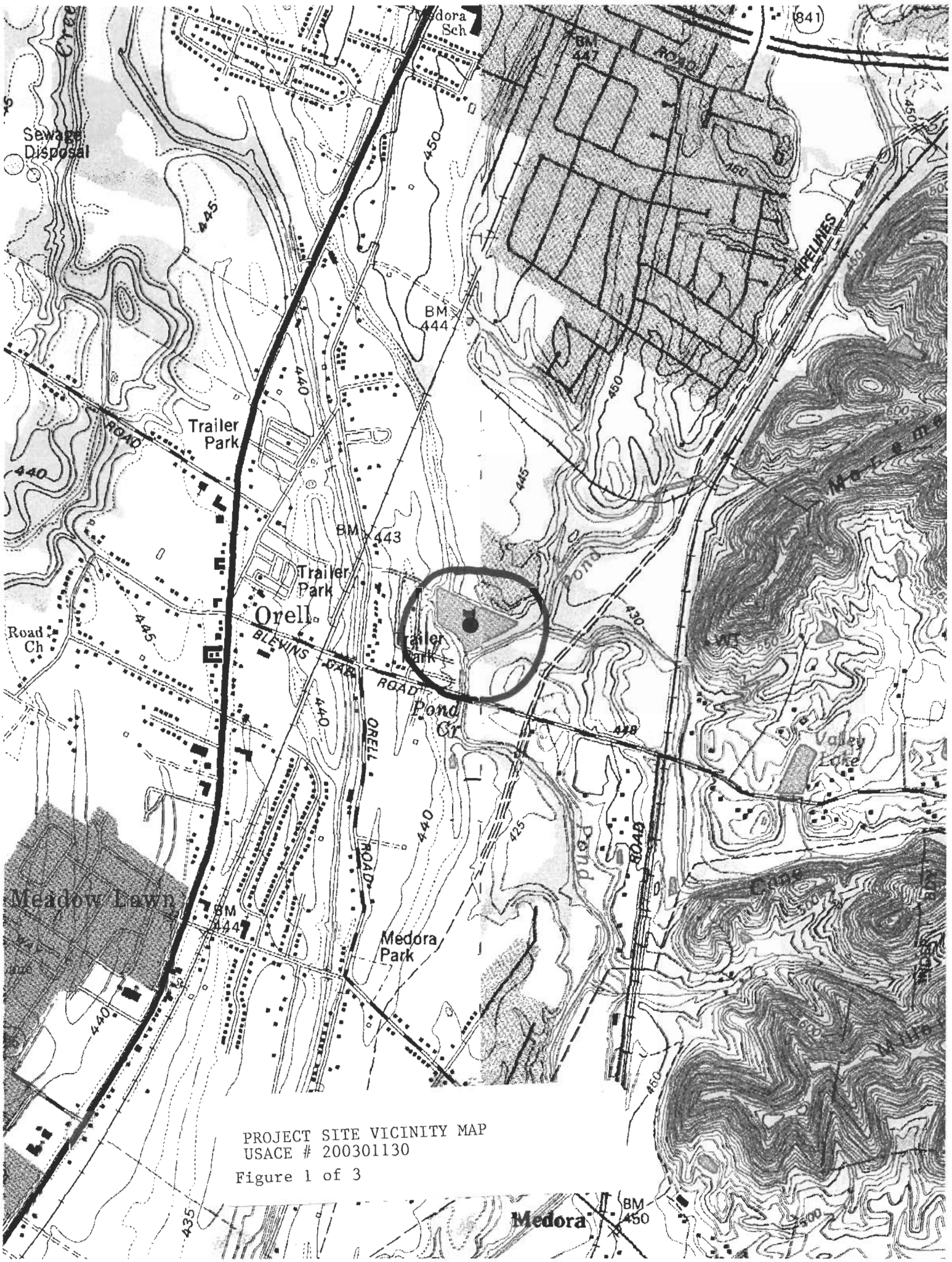

PROJECT SITE VICINITY MAP
USACE # 200301130

Figure 1 of 3

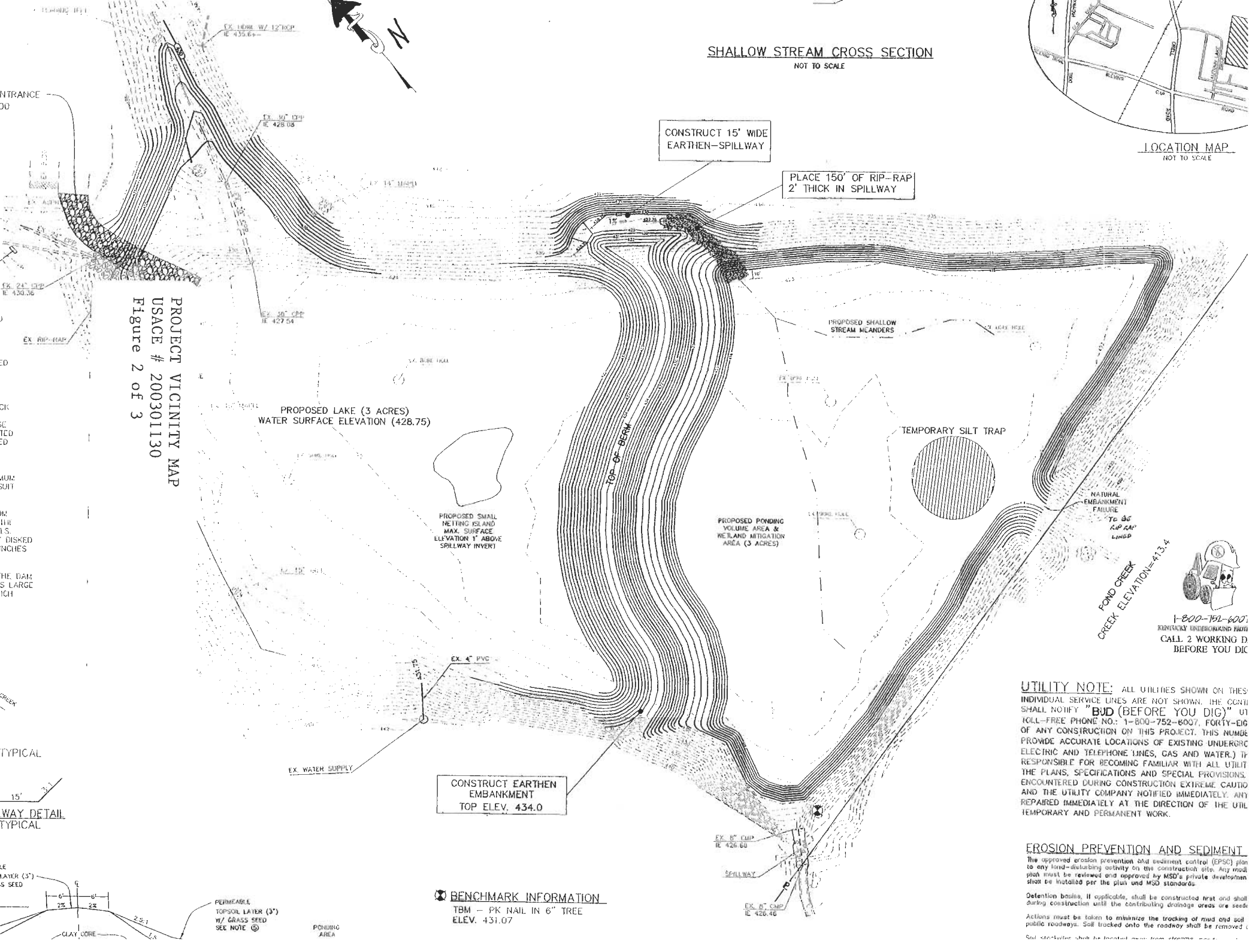

PROJECT VICINITY MAP
USACE # 200301130
Figure 2 of 3

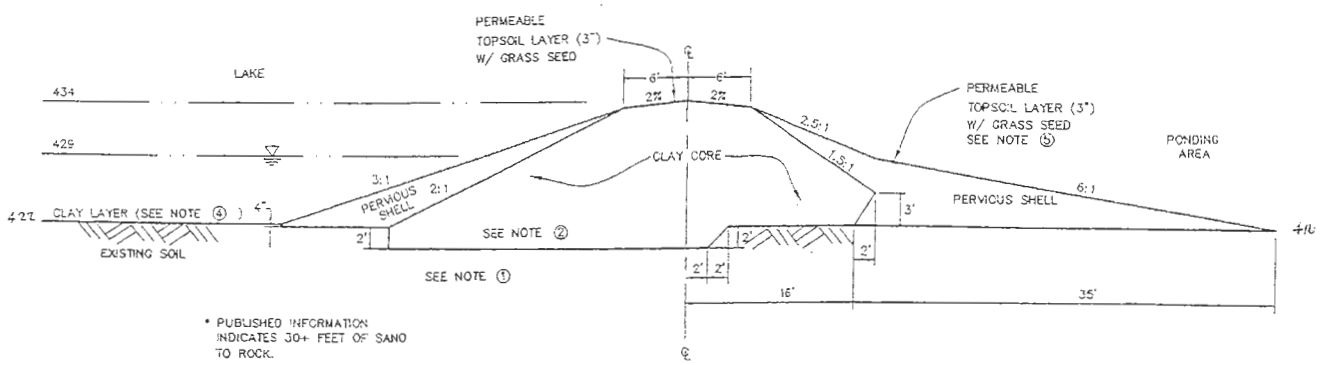

CROSS SECTION
N.T.S.

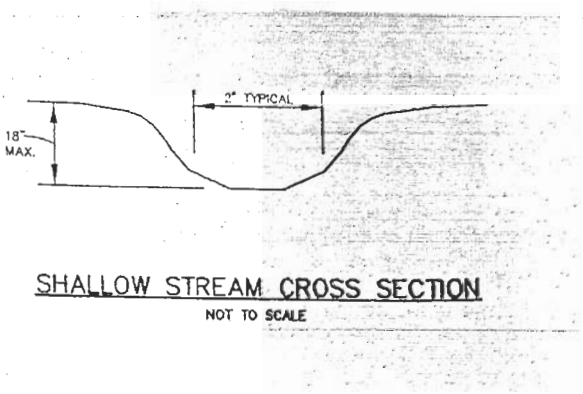

SHALLOW STREAM CROSS SECTION
NOT TO SCALE

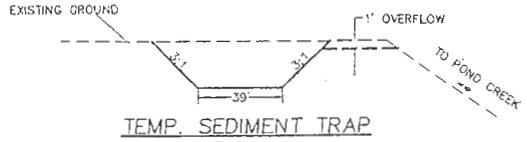

TEMP. SEDIMENT TRAP
TYPICAL

RIP-RAP DETAIL

TYPICAL

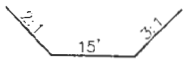

SPILLWAY DETAIL
TYPICAL

PROJECT SITE VICINITY MAP
USACE # 200301130
Figure 3 of 3