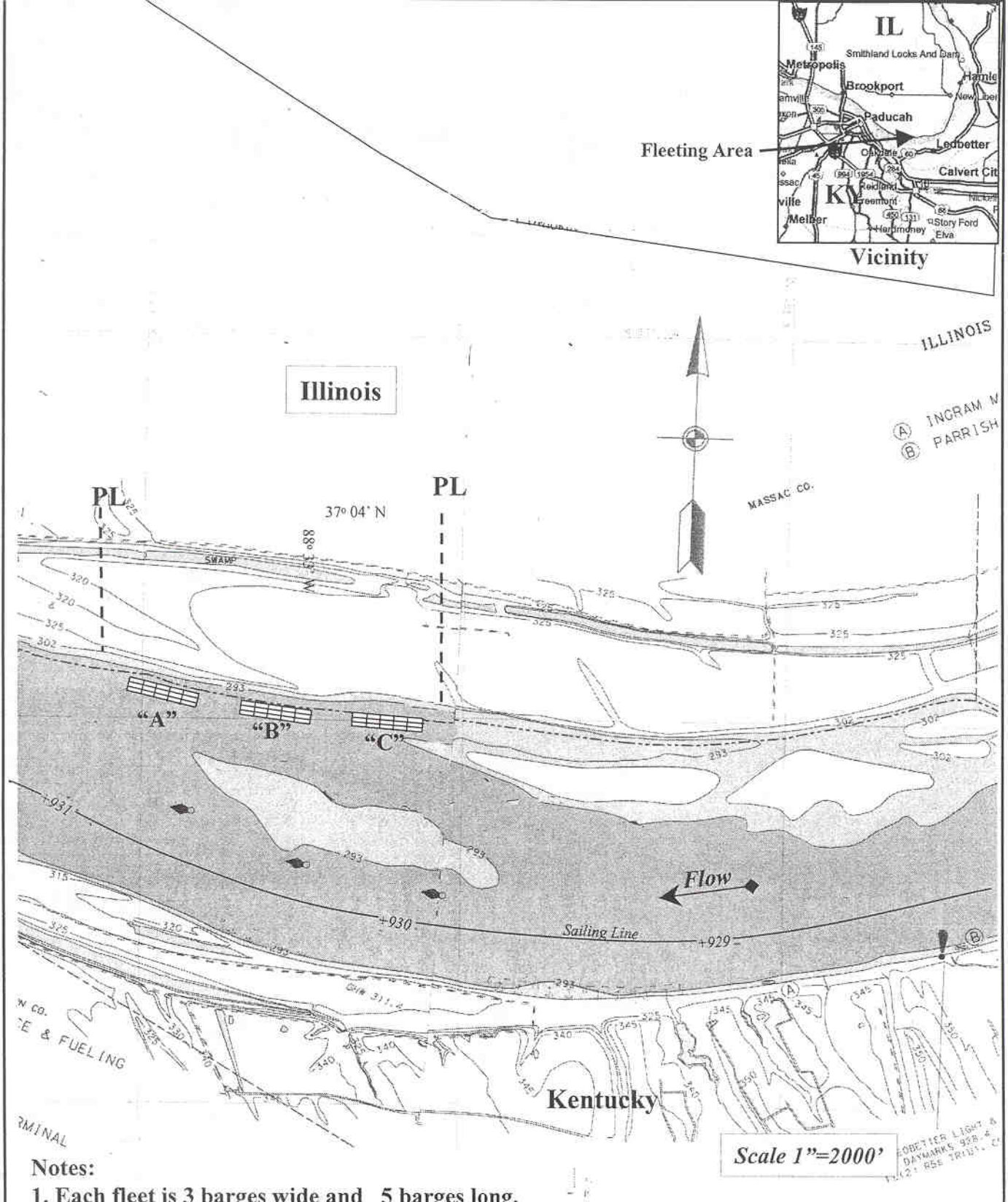

Notes:

1. Each fleet is 3 barges wide and 5 barges long.
2. Each fleet, "A", "B", and "C" will be moored as indicated on Dwgs 2 and 3.

Applicant:

McGinnis, Inc.
P.O. Box 534
South Point, OH 45680

Proposed Barge Fleeting
OH River 930.0 to 931.0 RDB

Location

Permit ID# 200300943
McGinnis, Inc.
Massac Co., Il & McCracken Co
Location Map
Sheet 1 of 3

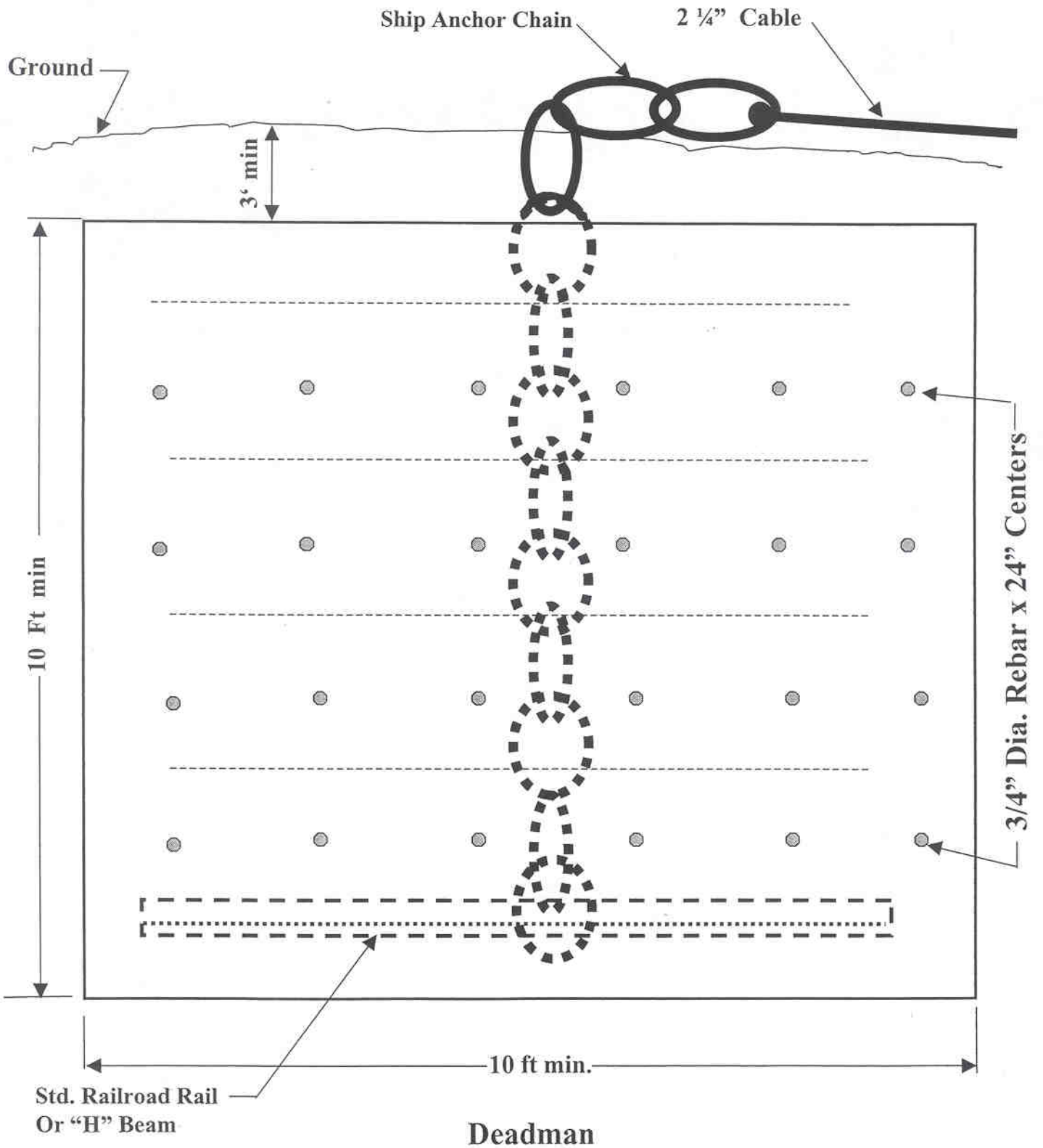

Deadman

Typical Size – 10 ft min x 10 ft min x 10 ft Deep

Concrete and 3/4" Rebar

Approx Scale: 1"=2'

Applicant: McGinnis, Inc. P.O. Box 534 South Point, OH 45680	**Proposed Barge Fleeting** OH River 930.0 to 931.0 RDB Typical Deadman	Permit ID# 200300943 McGinnis, Inc. Massac Co., Il & McCracken Co., Ky Deadmen Design Sheet 2 of 3

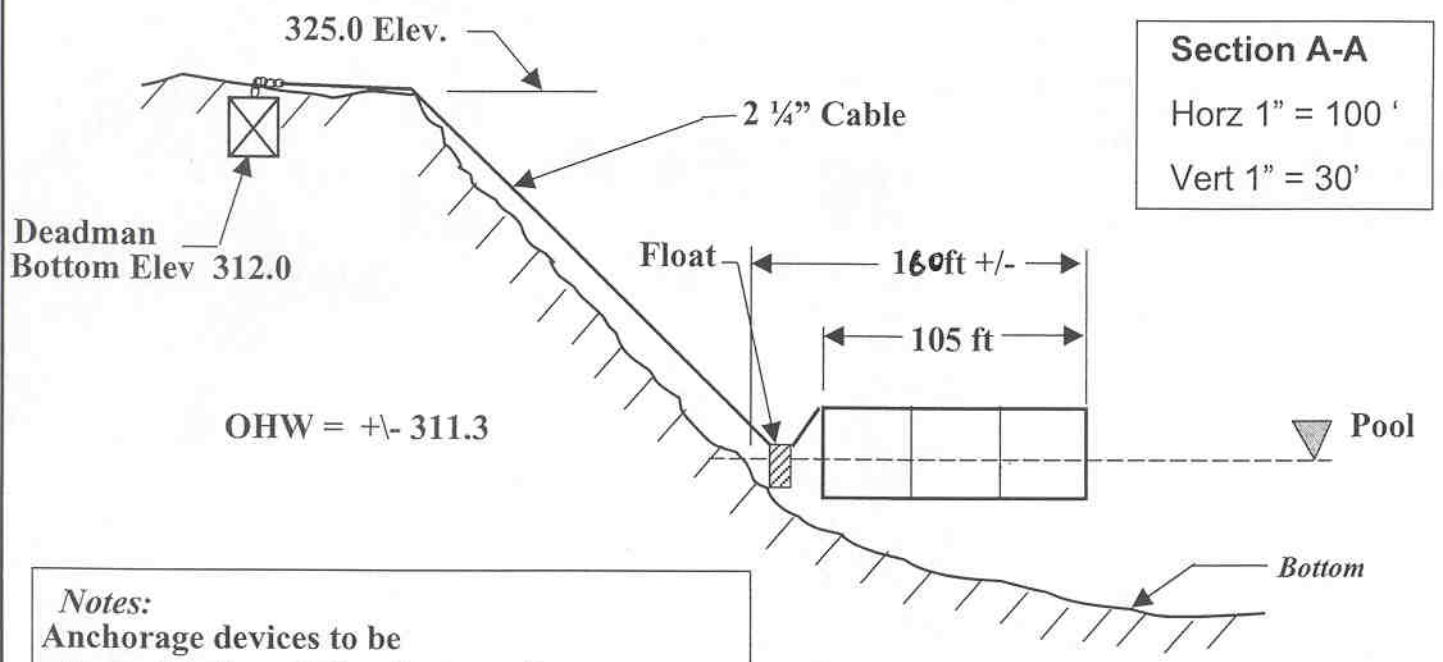

Notes:
Anchorage devices to be attached to five (5) Deadmen each weighing 75 tons minimum. They will be installed in firm soil at approximate elev. 320. All deadman cables 2 ¼" with floats.

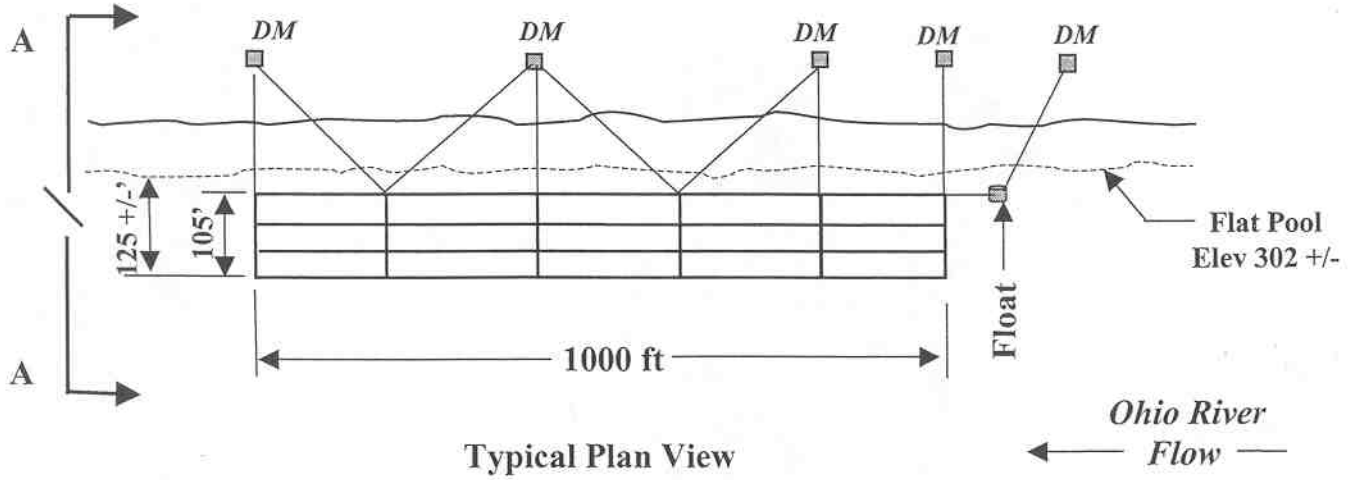

Typical Plan View

Scale 1"=300'

Applicant:
McGinnis, Inc.
P.O. Box 534
South Point, OH 45680

Agent:
XCorps, LLC, P.O. Box 144
Cincinnati OH 45039

Sheet 3 of 3 | 22 July 2003

Proposed Barge Fleeting

OH River 930.0 to 931.0 RDB

Plan and Section View

Permit ID# 200300943
McGinnis, Inc.
Massac Co., Il & McCracken Co., Ky
Plan View
Sheet 3 of 3