AMENDMENT OF SOLICITATION/MODIFICATION OF CONTRACT

1. CONTRACT ID CODE	PAGE OF PAGES
J	1 | 11

2. AMENDMENT/MODIFICATION NO.	3. EFFECTIVE DATE	4. REQUISITION/PURCHASE REQ. NO.	5. PROJECT NO.(If applicable)
0003	28-Jun-2002	W22W9K-2112-0682	

6. ISSUED BY CODE DACA27
USA ENGINEER DISTRICT, LOUISVILLE
ATTN: CELRL-CT
600 DR. MARTIN LUTHER KING PLACE
ROOM 821
LOUISVILLE KY 40202

7. ADMINISTERED BY (If other than item 6) CODE DACW27
CONTRACT ADMINSTRATION BRANCH
ATTN: DENISE M. GILL
P O BOX 59
PHONE: (502) 315-6188
LOUISVILE KY 40201-0059

8. NAME AND ADDRESS OF CONTRACTOR (No., Street, County, State and Zip Code)

CODE FACILITY CODE

X	9A. AMENDMENT OF SOLICITATION NO. DACA27-02-B-0007
X	9B. DATED (SEE ITEM 11) 13-May-2002
	10A. MOD. OF CONTRACT/ORDER NO.
	10B. DATED (SEE ITEM 13)

11. THIS ITEM ONLY APPLIES TO AMENDMENTS OF SOLICITATIONS

[X] The above numbered solicitation is amended as set forth in Item 14. The hour and date specified for receipt of Offer [ ] is extended, [X] is not extended.

Offer must acknowledge receipt of this amendment prior to the hour and date specified in the solicitation or as amended by one of the following methods: (a) By completing Items 8 and 15, and returning _____ copies of the amendment; (b) By acknowledging receipt of this amendment on each copy of the offer submitted; or (c) By separate letter or telegram which includes a reference to the solicitation and amendment numbers. FAILURE OF YOUR ACKNOWLEDGMENT TO BE RECEIVED AT THE PLACE DESIGNATED FOR THE RECEIPT OF OFFERS PRIOR TO THE HOUR AND DATE SPECIFIED MAY RESULT IN REJECTION OF YOUR OFFER. If by virtue of this amendment you desire to change an offer already submitted, such change may be made by telegram or letter, provided each telegram or letter makes reference to the solicitation and this amendment, and is received prior to the opening hour and date specified.

12. ACCOUNTING AND APPROPRIATION DATA (If required)

13. THIS ITEM APPLIES ONLY TO MODIFICATIONS OF CONTRACTS/ORDERS. IT MODIFIES THE CONTRACT/ORDER NO. AS DESCRIBED IN ITEM 14.

[ ] A.THIS CHANGE ORDER IS ISSUED PURSUANT TO: (Specify authority) THE CHANGES SET FORTH IN ITEM 14 ARE MADE IN THE CONTRACT ORDER NO. IN ITEM 10A.

[ ] B.THE ABOVE NUMBERED CONTRACT/ORDER IS MODIFIED TO REFLECT THE ADMINISTRATIVE CHANGES (such as changes in paying office, appropriation date, etc.) SET FORTH IN ITEM 14, PURSUANT TO THE AUTHORITY OF FAR 43.103(B).

[ ] C.THIS SUPPLEMENTAL AGREEMENT IS ENTERED INTO PURSUANT TO AUTHORITY OF:

[ ] D.OTHER (Specify type of modification and authority)

E. IMPORTANT: Contractor [ ] is not, [ ] is required to sign this document and return _____ copies to the issuing office.

14. DESCRIPTION OF AMENDMENT/MODIFICATION (Organized by UCF section headings, including solicitation/contract subject matter where feasible.)

Solicitation No. DACA27-02-B-0007 for Construction of Herrara Hall, U.S. Army Reserve Center (USARC) with Organizational Maintenance Shop (OMS) and Unit Storage Building, Mesa, Arizona, is amended as follows:

BID OPENING DATE AND TIME IS CORRECTED TO READ 11 JULY 2002 AT 2:00 P.M., LOCAL TIME

See attached for Miscellaneous Revisions

Except as provided herein, all terms and conditions of the document referenced in Item 9A or 10A, as heretofore changed, remains unchanged and in full force and effect.

15A. NAME AND TITLE OF SIGNER (Type or print)		16A. NAME AND TITLE OF CONTRACTING OFFICER (Type or print)	
15B. CONTRACTOR/OFFEROR (Signature of person authorized to sign)	15C. DATE SIGNED	16B. UNITED STATES OF AMERICA BY (Signature of Contracting Officer)	16C. DATE SIGNED 28-Jun-2002

Construction of Herrara Hall, U.S. Army Reserve Center (USARC) with Organizational Maintenance Shop (OMS) and Unit Storage Building, Mesa, Arizona

Solicitation No. DACA27-02-B-0007 - Addendum No. 0003

SCOPE : Miscellaneous Revisions

A) Specification Revisions:

1. Index
   a. Add the following sections to the Index:

01320	Project Schedule
01415	Metric Measurements
07132A	Bituminous Waterproofing
09612N	Epoxy Mortar Flooring System for Aircraft Maintenance Facilities
09650A	Resilient Flooring
09670A	Industrial Resin-Based Flooring
10201N	Metal Wall Louvers
11162A	Loading Dock Leveler
11165A	Dock Bumpers
11401N	Electric Kitchen Equipment
13720	Electronic Security System
15070	Seismic Protection For Mechanical Equpment
16070	Seismic Protection for Electrical Equipment

   b. Delete the following section from the Index:

      10753R Wall-Mounted Telephone Enclosures

2. Add spec section 01670A Recycled/Recovered Materials

3. Section 05500A MISCELLANEOUS METAL

   a. Article 2.12 ROLL-UP FLOOR MATS (MAT-1): Delete in its entirety.

   b. Article 3.8 RECESSED FLOOR MATS: Delete in its entirety.

4. Section 07412 NON-STRUCTURAL STANDING METAL ROOFING SYSTEM (NSSSMRS)

   a. Paragraph 3.1.3 Underlayment; In the second sentence delete the word ‘insulation’ and replace with the word ‘sheathing’ to read as follows:

      ‘It shall be installed directly over the sheathing.’

5. Section 09915R COLOR SCHEDULE

a. Article 1.2 SUBMITTALS; Under section 10100 Visual Communications Specialties delete paragraph Electrically Operated Projection Screen in its entirety.

6. Section 10100A VISUAL COMMUNICATION SPECIALTIES

a. Article 2.3 MARKER BOARDS;
Delete paragraph and replace with the following:

"Markerboard shall have a porcelain enamel writing surface and a chalktray. Markerboard shall be a factory assembled unit complete in one piece, without joints whenever possible. When markerboard dimensions require delivery in separate sections, components shall be prefit at the factory, disassembled for delivery and jointed at the site. Frame shall be aluminum. Chalktray shall be the same material as the frame and extend the full length of the liquid markerboard. The markerboard shall have a map rail as specified below with map hooks and a tackable insert shall extend the full length of the liquid chalkboard. Dry erase markings shall be removable with a felt eraser or dry cloth without ghosting. Each unit shall come complete with an eraser and four different color compatible dry erase markers. The size shall be as shown in the drawings."

Add new article 2.4 MAP RAILS to read as follows:

2.4 MAP RAILS
Map Rail shall have a tackable insert 50 mm wide and shall extend the full length of the rail, and shall have map hooks with clips for holding sheets of paper. Two map hooks shall be provided for each 1220 mm of map rail.

7. Section 10440 INTERIOR SIGNAGE

At end of this section delete Room Signage Schedule and Sign Pictogram and replace with new Room Signage Schedule for the Training Center plus added schedules for the OMS Building and Unit Storage Building. Also, attached to this Addendum updated Sign Pictogram by deleting Building Directory from spec (shown on drawings).

8. Section 10530R MISCELLANEOUS SPECIALTIES (PARTIAL OMAR FUNDED)

a. Add new Article 2.13 to read as follows:

2.13 RECESSED FLOOR MATS (MAT-1)
Entrance roll-up mats trap dirt and mud thereby reducing building maintenance. Mats will only be used in interior of buildings at major entrances when required. Designers should review commercial products and specify selection.
Roll-up mats shall be recessed of thermal plastic construction with carpet surface. Roll-up mats shall be for use in recessed area. Construction details of recessed areas shall be shown on the drawings.Roll-up mat shall be equal to Milliken First Appearance, Brush-Off Barrier Free; Color: #121 'Driftwood' as

manufactured by Milliken & Company, 201 Lukken Ind. Dr. West, Lagrange, GA 30240, ph; 888-645-6239 or equal

b. Add new Article 3.2 to read as follows:

3.2 RECESSED FLOOR MATS
Contractor shall verify field measurements prior to releasing materials for fabrication by the manufacturer. A mat frame shall be used to ensure recess accuracy in size, shape and depth. Drain pit shall be formed by blocking out concrete when frames are installed. Pit shall be dampproofed after concrete has set. Frames shall be assembled onsite and installed so that upper edge will be level with finished floor surface. A cement base shall be screeded inside the mat recess frame area using the edge provided by the frame as a guide. The frame shall be anchored into the cement with anchor pins a minimum of 610 mm on centers.

9. Section 13121 METAL BUILDING SYSTEMS (MINOR REQUIREMENTS)

Paragraph 1.3.1 Building Configurations and Building Systems; Change the first sentence to read as follows:
Buildings shall have vertical walls and shed roofs.

Delete paragraph 1.4.6.1 Continuous Ventilators in its entirety.

10. Section 15951 AUTOMATIC TEMPERATURE CONTROLS for HVAC (Not reissued)

a. Paragraph 3.3.3, delete “at dual duct terminal unit”.

b. Paragraph 3.3.3, add the following: “Pressure differential control device shall allow minimum hot water bypass flow at high pressure differential conditions when pump VFD is at minimum setting. Pressure differential shall include pressure differential sensor, electrical actuated 2-way control valve and 1” bypass pipe.”

c. Paragraph 3.3.5.2, add paragraph (c) as follows: “c. Secondary chilled water pump system shall be controlled through local DDC controller and central computer control panel. Secondary chilled water pump shall, through DDC controller and variable frequency drive (VFD), vary chilled water flow to building chilled water loop. A pressure differential control device between secondary chilled water supply and return mains at AHU-2-T coil shall control operating pump VFD to vary chilled water in building circuit. Pressure differential control device shall also allow minimum chilled water bypass flow at high pressure differential conditions when pump VFD is at minimum setting.

Pressure differential device shall include pressure differential sensor, electrical actuated 2-way control valve and 1" bypass pipe."

B) Drawing Clarifications/Revisions

1. Sheet C1.1 – Existing Site Topography (Not reissued)
   a. On east end of Building 689 revised note "CANOPY IN PLACE" to read "CANOPY REMOVED TO ELEVATED PLATFORM BY GOVERNMENT".
2. Sheet C1.2.1 – Site Demolition (Not Reissued)
   a. Remove notes "REMOVE CANOPY" and "CANOPY IN PLACE" from Building 689 platform.
   b. Change note "REMOVE OUT-BUILDING NO. 1 & CONCRETE SLAB" to read "REMOVE CONCRETE SLAB"
   c. Change note "REMOVE OUT-BUILDING NO. 3, STORAGE CAGES, DUCTS, CONCRETE SLAB & FOUNDATION" to read "REMOVE CONCRETE SLAB & FOUNDATION"
3. Sheet C1.2.2 – Site Demolition Images(Not reissued)
   a. Images 3&4/C1.2.2 - change note "OPEN STRUCTURE & FOUNDATION REMOVED BY CONTRACTOR" to read "OPEN STRUCTURE REMOVED BY GOVERNMENT. CONCRETE SLAB AND FOUNDATION REMOVED BY CONTRACTOR".
4. Sheet C1.3.1 – Site Layout Plan (Not reissued)
   a. Change the keynote reference near the Unit Storage loading ramp from 32 to 30.
   b. At Keynote No. 6, Change paint color from white to yellow and spacing to 500mm O.C.
   c. At Keynote No. 20, Change detail reference 6/C2.2 to 4/C2.4
5. Sheet C1.7.1 – Site Paving Plan – Base Bid (Not reissued)
   a. Remove running track from this drawing.
   b. Change detail reference for Concrete Sidewalk in the legend to 1/C2.9
6. Sheet C1.7.2 – Site Paving Plan, Optional Bid Item. (Not reissued)
   a. Change detail reference for MEP Shoulder in Legend to 8/C2.1
7. Sheet C2.1 – Site Fencing Details (Not reissued)
   a. Change detail 5/C2.1 title from "EXTENSION ARM" to "FENCE DETAIL". Add note as follows: "64mm DIA. O.D. POSTS SPACED @ 3000mm O.C. MAX." Add dimensions to footing to show 1000mm depth and 400mm DIA.
   b. Change detail 8/C2.1 note "AGGREGATE SURFACING OR ASPHALT PAVING, REFER TO SHEETS SERIES C1.7 @ BID OPTIONS NO. 0011 AND NO. 0012" to read "AGGREGATE SURFACING OR ASPHALT PAVING, REFER TO SHEET C1.7.1 & C1.7.2 PLUS BID OPTION NO. 0016". Also, change note "CHAIN LINK FENCE, REFER TO DETAIL 1 ON SHEET C2.1" to "CHAIN LINK FENCE, REFER TO DETAIL 5 ON SHEET C2.1"
8. Sheet C2.2 – Bi-Level Loading Ramp (Reissued)
   a. Revised elevation heights indicated in details.
9. Sheet C2.4 – Site Details (Not reissued)
   a. Change scale of detail 5/C2.4 - Plan of Trash Enclosure, from 1:20 to 1:100.
   b. Delete note "152mm DIAMETER GOLD ANODIZED SPUN ALUMINUM BALL WITH FLUSH SEAM" from detail 6/C2.4.
10. Sheet C2.5 – Decorative Fence Details (Not reissued)
    a. Add note "ISLAND INDICATED WITH YELLOW PAINT" to detail 1/C2.5 plus remove dimension showing spacing of crosswalk striping.
11. Sheets A1.1.1 thru A1.1.4 – Training Center, Floor Plans (Not reissued)

   a. Change Keynote No. 1 to ” METAL STORAGE SHELVING 610 x 1 220 (5) SHELVES HIGH (OMAR EQUIP.)”
   b. Change Keynote No. 38 to ”NOT USED”
   c. Change General Note No. 3 to “PROVIDE HORIZONTAL LOUVER BLINDS AT ALL EXTERIOR WINDOW LOCATIONS EXCEPT CLERESTORY WINDOWS. REFER TO SPEC SECTION 12490A.”
12. Sheet A1.1.1 - Floor Plan, Training Center, First Floor East (Not reissued)
   a. In NOC 109, change Keynote No.39 to Keynote No.33.
13. Sheet A1.1.2 – Floor Plan, Training Center, First Floor West (Not reissued)
   a. At west wall of ARMORER 117, change Partition Type M4BF to M4AF
   b. Remove Keynote No. 26 at grids “H” and “5”.
14. Sheet A1.1.3 – Floor Plan, Training Center, Second Floor East (Not reissued)
   a. Remove (4) Keynote No. 17 along grid “6”.
15. Sheet A1.1.4 – Floor Plan, Training Center, Second Floor West (Not reissued)
   a. Remove Keynote No. 26 at grid “6”.
16. Sheet A1.2 – Floor Plan, OMS Building (Reissued)
   a. Miscellaneous revisions.
17. Sheet A1.3 – Composite Floor Plans, Unit Storage (Reissued)
   a. Clarified bid options.
18. Sheet A1.3.1 – Floor Plan, Unit Storage, Base Bid (Reissued)
   b. Miscellaneous revisions.
19. Sheet A1.3.2 – Floor Plan, Unit Storage, Options 0011 & 0012 (Reissued)
   a. Miscellaneous revisions.
20. Sheet A2.1.4 – Reflected Ceiling Plan, Training Center, Second Floor (Not reissued)
   a. Showed (1) ceiling mounted Projection Screens (Keynote No. 1) on the north end of Classroom 218 and Team room 220.
21. Sheet A2.2 – Reflected Ceiling Plan, OMS Building (Reissued)
   a. Remove unnecessary symbols.
22. Sheet A3.1.1– Roof Plan, Training Center, East (Not reissued)
   a. Change Roof Plan Keynote No. 3 from “NOT USED” to “WALKWAY SURFACES”
23. Sheet A3.1.2 – Roof Plan, Training Center, West (Not reissued)
   a. Note “ WALKWAY SURFACES” (Keynote No. 3) to kitchen roof located between grids 8 & 10 and G & J.
24. Sheets A4.1.1 thru A4.1.3 – Exterior Elevations, Training Center (Not reissued)
   a. Change Keynote No. 17 detail reference from 2/A9.5 to 5/A9.5.
   b. Change Keynote No. 21 from “NOT USED” to “DOWNSPOUT NOZZLE @ 200mm AFF”
25. Sheet A4.1.1 - Exterior Elevations, Training Center, North (Not reissued)
   a. Add Keynote No. 21 to bottom of Lobby pier at grid “5” on 1/A4.1.1.
26. Sheet A4.1.3 - Exterior Elevations, Training Center, East & West (Not reissued)
   a. Add Keynote No. 16 at bottom of Downspout to the right of grid “J” on 1/A4.1.3 to indicate a splash block.
   b. Add Keynote No. 27 calling out the size of the louver to the left of grid “D” on 2/A4.1.3.
27. Sheet A4.2 – Exterior Elevations, OMS Building (Not reissued)
   a. Change Keynote No. 9 detail reference from 2/A9.5 to 5/A9.5.
   b. At elevations 2 & 3/A4.2, Remove precast headers from above doors and change door frame of single door on right (Door 101E on sheet A1.2) to a masonry hollow metal frame without a louver (DM on sheet A6.0).

28. Sheets A4.3.1 & A4.3.2 – Exterior Elevations, Unit Storage (Not reissued)
    a. Remove Control Joint (CJ) from the Legend on both sheets.
29. Sheet A5.1 – Wall Sections, Training Center (Not reissued)
    a. Remove Foundation Drainage note and/or drainage tile from 1-4/A5.1.
    b. Show foundation insulation R value to be "R-14 " on section 1/A5.1.
30. Sheet A5.2 – Wall Sections, Training Center (Not reissued)
    a. Show Foundation Insulation on inside of foundation wall on sections 1 & 4/A5.2.
    b. Delete Drainage tile on section 1/A5.2.
31. Sheet A5.3 – Wall Sections, Training Center (Not reissued)
    a. Delete Drainage tile on section 3/A5.3.
32. Sheet A5.5 – Wall Sections, OMS (Reissued)
    a. Add Wall Section 1/A5.5 taken at a window.
    b. Show Foundation Insulation on inside of foundation wall on section 2/A5.5.
    c. Remove Foundation Drainage note and/or drainage tile from 3&4/A5.5.
33. Sheet A6.1 – Training Center, Opening Schedule (Not reissued)
    a. Change Frame Type for Doors 101B-B, 111B, 115B and 115C from DM to DM2.
34. Sheet A6.2 – OMS and Unit Storage Opening Schedule (Reissued)
    a. Add Overhead Counter Shutter Jamb Detail 1/A6.2.
    b. Change Frame Type of Door 101E from "DM2" to "DM"
    c. Change the spec section referenced for Misc. Specialties to 10530R in Door/Window Schedule Remarks No. 1.
35. Sheet A6.4 – Opening Details (Not reissued)
    a. Change R value of 50mm Rigid Insulation to R-14 on detail 9/A6.4.
36. Sheet A7.2 – Enlarged Restroom Plans and Interior Elevations, OMS Building (Not reissued)
    a. Remove keynotes at 3/A7.2.
    b. Add (2) floor drains to both Women 104 and Men 105 at 3/A7.2. One drain to be centered in room near toilet and partition and the other to be in front of shower.
37. Sheet A7.3 - Enlarged Restroom Plans and Interior Elevations, Unit Storage (Not reissued)
    a. Switch East Elevations of 1 & 2 /A7.3.
    b. Add note "CT-4, TYP" to tile, "CT-1, COVED BASE, TYP" to the tile base and "A-2" to the mirrors on South and North elevations in 1 & 2/A7.3.
    c. Add "A-3" (Toilet Seat Cover Dispenser) to the back side of the accessible toilet stall in WOMEN 108.
38. Sheet A7.4 – Interior Elevations & Details, Training Center (Not reissued)
    a. Remove note "19mm TFM OR MCP SHELVES" for detail 15/A7.4
39. Sheet A9.5 – Entrance Canopy Details (Reissued)
    a. Miscellaneous revisions.
40. Sheet A9.6 – Miscellaneous Details (Reissued)
    a. Delete Detail 7/A9.6 and list as "Not Used"
    b. Revised Detail 16/ A9.6, to show building diagrams on the Building Directory.
41. Sheet A9.7 - Miscellaneous Details (Not reissued)
    a. At Detail 11/A9.7, change note "DOWNSPOUT NOSSLE" to read "DOWNSPOUT NOZZLE @ 200mm AFF" and add note "150mm x 150mm OPENING IN CONC WALL" where rainwater leader passes through wall.
42. Sheet A10.1 –Training Center Kitchen Plans and Equipment Schedule (Reissued)
    a. Miscellaneous revisions.
43. Sheet A10.2 - Training Center Kitchen Plans and Elevations (Reissued)

a. Miscellaneous revisions.

44. Sheet A12.1 – Training Center Room Finish schedule (Not Reissued)
    a. In Room Finish Key, change "RUBBER FLOORING (SPEC SEC 09620 & 09650) to "RUBBER FLOORING (SPEC SEC 09050A)
    b. In Room Finish Key, change "ENTRANCE MAT (SPEC SEC 09697)" to "ENTRANCE MAT (SPEC SEC 10530)"

45. Sheet S2.1.1 – Schedules and Details (Not Reissued)
    a. Clarification at plan note #7: the intent of the note is to specify maximum construction and control joints within the concrete slab on grade. It is not intended to limit the amount of concrete placed. Slab control joints or construction joints shall be located according to the maximum spacing specified and located perpendicular to each other such that a maximum area of 60 square meters is surrounded by slab joints.
46. Sheet S2.1.2 – Partial Foundation Plan Training Center West (Reissued)
    a. Revised plan: east wall of room #117 is non-load bearing CMU wall. Arms Vault walls shall have strip footings, see revised plan.
    b. Revised plan: detail 16/S4.1 is typical at non-load bearing CMU walls in the OMS building and Training Center, see revised plan.
47. Sheet S2.2 – Foundation Plan OMS Building (Not Reissued)
    a. Clarification: see architectural detail 3/A9.6 for trench drain detail.
48. Sheet S4.2 – Foundation Details (Not Reissued)
    a. Clarification: detail 9/S4.2 refers to the retaining wall located at Unit Storage.
49. Sheet S5.5 – Arms Vault Plans & Stair Framing Plans (Not Reissued)
    a. Clarification: Detail 1/S5.5 refers to notes #21 and #22 on sheet S2.1.1, not S2.2.1.

50. Sheet M2.3.2 – Storage Building South HVAC Plan (Option 11 and 12) (Not reissued) Option 11, EC-2-S and CU-4-S and Option 12, CU-5-S and EC-3-S.
    a. Add a note to read "Concrete pads by General Contractor. See Detail 2/C2.13."
51. Sheet M4.3 – Mechanical Details (Not reissued)
    a. Revise detail 4/M4.3 to delete the 3-way valve and provide 2-way valve on CHR piping. Delete bypass pipe.
    b. Revise Detail 7/M4.3, Note 5 to delete "pneumatic services" and add "electric power service."
52. Sheet M6.1 – HVAC Control Schematics (Not reissued)
    a. Revise Detail 8/M6.1 to delete standby primary pump and standby secondary pump.

53. Sheet P1.2.1 – OMS Building Plumbing (Not reissued)
    a. In Room 104, provide two (2) 50 mm FD-1 floor drains. Connect 50 mm sanitary pipe from each to 100 mm sanitary main in Room 104. Locate one (1) floor drain at water closet and one (1) floor drain outside shower area. See architectural drawing for exact locations.
    b. In Room 105, provide two (2) 50 mm FD-1 floor drains. Connect 50 mm sanitary pipe from each to 100 mm sanitary main in Room 105. Locate one (1) floor drain at water closet and one (1) floor drain outside shower area. See architectural drawing for exact locations.

54. Sheet FS0.0 – Fire Sprinkler Design Criteria - Sprinkler Notes (Not reissued)

a. In Note 2 delete “Flammable Storage (OMS)” and “Controlled Storage (OMS)”.
b. In Note 2 add paragraph “E” to read “E. EXTRA HAZARD – Group 1 (0.20 L/S per square meter over most remote 280 square meters) • FLAMMABLE STORAGE (OMS) • CONTROLLED WASTE (OMS)

55. Sheet FS1.2.1 – OMS Building Fire Sprinkler - Sprinkler Notes (Not reissued)
    a. In Note 1 after “Ordinary Hazard” add “and Flammable Room 107 which shall be Extra Hazard, Group 1.”
    b. Add Note Number 6 to read “6. Provide dry type sidewall sprinkler heads for Room 107 Flammable.”

56. Sheet E0.0 – Electrical Legend and General Notes (Not reissued)
    a. Delete General Note 8.
57. Sheet E1.1 – Electrical Site Plan (Not reissued)
    a. For site lighting fixtures installation location, refer to Sheet C1.3.1.
58. Sheet E4.1.1 – Training Center First Floor East Power and Systems Plan (Not reissued)
    a. Delete Numbered Note 21.
    b. Provide a manual pull station and associated conduit/wire near exterior door 153A.
    c. Delete the door contact switches at doors 111B, 153A and 154A.
59. Sheet E4.1.2 – Training Center First Floor West Power and Systems Plan (Not reissued)
    a. Provide two (2) manual pull stations and associated conduit/wire. Install one near each exterior door 115B and 115C.
    b. Delete Numbered Note 31.
    c. Delete the door contact switches at doors 100A, 101B-B, 115B, 115C, 115B-E, and 155A.
60. Sheet E4.1.4 – Training Center Second Floor West Power and Systems Plan (Not reissued)
    a. Delete the door contact switch at door 219B.
    b. Delete Numbered Note 14.
61. Sheet E4.2.1 – OMS Building Power and Systems Plan (Not reissued)
    a. Revise Numbered Note 20 to read “Provide Daniel Woodhead 92532N, 14GA, 21340 mm cord reel with 1090-H2 light head 9521 stop assembly and 9503 pivot base.”
    b. Delete Numbered Note 37.
    c. Delete door contact switches at doors 101E, 102A, 102B, 102C, 102D, 102E, 102F, 102G, 103A, 106A, 107A, 109A, and 110A.
62. Sheet E4.3.1 – Storage Building North Power and Systems Plan – Base Bid (Not reissued)
    a. Delete the door contact switches at doors 100A, 100B, 100C, 110B and 113A. Numbered Note 16 was inadvertently used in lieu of Numbered Note 17 at all door contacts.
    b. Delete Numbered Note 17.
    c. The junction box mounted on the west side of the building near door 110B is to have Numbered Note 16 in lieu of Numbered Note 17.
63. Sheet E4.3.2 – Storage Building Power and Systems Plan – Option #0011 (Not reissued)
    a. Delete the door contact switches at doors 100A, 100B, 100C, 110B and 113A.
    b. Delete Numbered Note 17.

64. Sheet E4.3.3 – Storage Building Power and Systems Plan – Option #0012 (Not reissued)
    a. Delete the door contact switches at doors 100A, 100B, 100C and 110B.
    b. Delete Numbered Note 17.
    c. The junction box mounted on the west side of the building near door 110B is to have Numbered Note 16 in lieu of Numbered Note 17.
65. Sheet E4.3.4 – Storage Building South Power and Systems Plan – Option #0012 (Not reissued)
    a. Delete the door contact switches at door 113A.
    b. Delete Numbered Note 3.
66. Sheet E5.2 – Details (Not reissued)
    a. Revise Detail 7/E5.2 to delete door contact switch and associated conduit/wire.
    b. Revise Detail 8/E5.2 to delete door contact switch and associated conduit/wire.
67. Sheet E5.3 – Kitchen Details (Not reissued)
    a. Add General Note G to read "Electrical Contractor to coordinate electrical requirements of kitchen equipment with actual equipment to be installed and make necessary adjustments to circuit breaker size, wire size, conduit, connection type, and connection location."
    b. Numbered Note 1 change mounting height of junction boxes to 480 mm.
    c. The gas solenoid and the hood fire suppression panel are to be fed from panel P3T-105B, circuits 14 and 16, respectively.
    d. Provide a manual pull station and associated conduit/wire near exterior door 115B-E.
68. Sheet E5.5 (Reissued)
    a. Revised Detail 3/E5.5.
69. Sheet E5.7 (Reissued)
    a. Clarification of Detail 2/E5.7.
    b. Added Detail 3/E5.7.
70. Sheet E6.2 (Reissued)
    a. Revised Light Fixture Schedule.
71. Sheet E6.4 – Panel Schedules (Not reissued)
    a. Panel P30-102A, circuits 4, 8 and 12, provide GFI breakers.

SECTION 01670A

RECYCLED / RECOVERED MATERIALS

9/01

PART 1 GENERAL

1.1 REFERENCES

The publications listed below form a part of this specification to the extent referenced. The publications are referred to in the text by basic designation only.

U.S. NATIONAL ARCHIVES AND RECORDS ADMINISTRATION (NARA)

40 CFR 247	Comprehensive Procurement Guideline for Products Containing Recovered Material

1.2 OBJECTIVES

Government procurement policy is to acquire, in a cost effective manner, items containing the highest percentage of recycled and recovered materials practicable consistent with maintaining a satisfactory level of competition without adversely affecting performance requirements or exposing suppliers' employees to undue hazards from the recovered materials. The Environmental Protection Agency (EPA) has designated certain items which must contain a specified percent range of recovered or recycled materials. EPA designated products specified in this contract comply with the stated policy and with the EPA guidelines. The Contractor shall make all reasonable efforts to use recycled and recovered materials in providing the EPA designated products and in otherwise utilizing recycled and recovered materials in the execution of the work.

1.3 EPA DESIGNATED ITEMS INCORPORATED IN THE WORK

Various sections of the specifications contain requirements for materials that have been designated by EPA as being products which are or can be made with recovered or recycled materials. These items, when incorporated into the work under this contract, shall contain at least the specified percentage of recycled or recovered materials unless adequate justification (non-availability) for non-use is provided. When a designated item is specified as an option to a non-designated item, the designated item requirements apply only if the designated item is used in the work.

1.4 EPA PROPOSED ITEMS INCORPORATED IN THE WORK

Products other than those designated by EPA are still being researched and are being considered for future Comprehensive Procurement Guideline (CPG) designation. It is recommended that these items, when incorporated in the work under this contract, contain the highest practicable percentage of recycled or recovered materials, provided specified requirements are also met.

1.5 EPA LISTED ITEMS USED IN CONDUCT OF THE WORK BUT NOT INCORPORATED IN THE WORK

There are many products listed in 40 CFR 247 which have been designated or proposed by EPA to include recycled or recovered materials that may be used by the Contractor in performing the work but will not be incorporated into the work. These products include office products, temporary traffic control products, and pallets. It is recommended that these non-construction products, when used in the conduct of the work, contain the highest practicable percentage of recycled or recovered materials and that these products be recycled when no longer needed.

-- End of Section --

SECTION 05500A

MISCELLANEOUS METAL
04/01

PART 1 GENERAL

1.1 REFERENCES

The publications listed below form a part of this specification to the extent referenced. The publications are referred to in the text by basic designation only.

ALUMINUM ASSOCIATION (AA)

AA DAF-45	(1997) Designation System for Aluminum Finishes

AMERICAN NATIONAL STANDARDS INSTITUTE (ANSI)

ANSI A14.3	(1992) Ladders - Fixed - Safety Requirements

AMERICAN SOCIETY FOR TESTING AND MATERIALS (ASTM)

ASTM A 36/A 36M	(2000) Carbon Structural Steel
ASTM A 53/A 53M	(1999b) Pipe, Steel, Black and Hot-Dipped, Zinc-Coated, Welded and Seamless
ASTM A 123/A 123M	(2000) Zinc (Hot-Dip Galvanized) Coatings on Iron and Steel Products
ASTM A 413/A 413M	(1996) Carbon Steel Chain
ASTM A 500	(1999) Cold-Formed Welded and Seamless Carbon Steel Structural Tubing in Rounds and Shapes
ASTM A 653/A 653M	(2000) Steel Sheet, Zinc-Coated (Galvanized) or Zinc-Iron Alloy-Coated (Galvannealed) by the Hot-Dip Process
ASTM A 924/A 924M	(1999) General Requirements for Steel Sheet, Metallic-Coated by the Hot-Dip Process

AMERICAN WELDING SOCIETY (AWS)

AWS D1.1	(2000) Structural Welding Code - Steel

U.S. GENERAL SERVICES ADMINISTRATION (GSA)

CID A-A-344	(Rev B) Lacquer, Clear Gloss, Exterior, Interior

NATIONAL ASSOCIATION OF ARCHITECTURAL METAL MANUFACTURERS (NAAMM)

NAAMM MBG 531 (1994) Metal Bar Grating Manual

1.2 SUBMITTALS

Government approval is required for submittals with a "G" designation; submittals not having a "G" designation are for information only. When used, a designation following the "G" designation identifies the office that will review the submittal for the Government. The following shall be submitted in accordance with Section 01330 SUBMITTAL PROCEDURES:

SD-02 Shop Drawings

Miscellaneous Metal Items;

Detail drawings indicating material thickness, type, grade, and class; dimensions; and construction details. Drawings shall include catalog cuts, erection details, manufacturer's descriptive data and installation instructions, and templates. Detail drawings for the following items:

Handrails and Guardrails
Fixed ladders
Operable partition supports
Trench grate and frames
Metal floor grating
Aluminum ramps
Concrete filled pipe bollards and pipe guards
Corner guards
Lintels
Overhead coiling door frame
Ledge and shelf angles
Access doors and panels
Other miscellaneous metal item

1.3 GENERAL REQUIREMENTS

The Contractor shall verify all measurements and shall take all field measurements necessary before fabrication. Welding to or on structural steel shall be in accordance with AWS D1.1. Items specified to be galvanized, when practicable and not indicated otherwise, shall be hot-dip galvanized after fabrication. Galvanizing shall be in accordance with ASTM A 123/A 123M, ASTM A 653/A 653M, or ASTM A 924/A 924M, as applicable. Exposed fastenings shall be compatible materials, shall generally match in color and finish, and shall harmonize with the material to which fastenings are applied. Materials and parts necessary to complete each item, even though such work is not definitely shown or specified, shall be included. Poor matching of holes for fasteners shall be cause for rejection. Fastenings shall be concealed where practicable. Thickness of metal and details of assembly and supports shall provide strength and stiffness. Joints exposed to the weather shall be formed to exclude water.

1.4 DISSIMILAR MATERIALS

Where dissimilar metals are in contact, or where aluminum is in contact

with concrete, mortar, masonry, wet or pressure-treated wood, or absorptive materials subject to wetting, the surfaces shall be protected with a coat of bituminous paint or asphalt varnish.

1.5 WORKMANSHIP

Miscellaneous metalwork shall be well formed to shape and size, with sharp lines and angles and true curves. Drilling and punching shall produce clean true lines and surfaces. Welding shall be continuous along the entire area of contact except where tack welding is permitted. Exposed connections of work in place shall not be tack welded. Exposed welds shall be ground smooth. Exposed surfaces of work in place shall have a smooth finish, and unless otherwise approved, exposed riveting shall be flush. Where tight fits are required, joints shall be milled. Corner joints shall be coped or mitered, well formed, and in true alignment. Work shall be accurately set to established lines and elevations and securely fastened in place. Installation shall be in accordance with manufacturer's installation instructions and approved drawings, cuts, and details.

1.6 ANCHORAGE

Anchorage shall be provided where necessary for fastening miscellaneous metal items securely in place. Anchorage not otherwise specified or indicated shall include slotted inserts made to engage with the anchors, expansion shields, and power-driven fasteners when approved for concrete; toggle bolts and through bolts for masonry; machine and carriage bolts for steel; and lag bolts and screws for wood.

1.7 ALUMINUM FINISHES

Unless otherwise specified, aluminum items shall have standard mill finish or anodized finish. The thickness of the coating shall be not less than that specified for protective and decorative type finishes for items used in interior locations or architectural Class I type finish for items used in exterior locations in AA DAF-45. Items to be anodized shall receive a polished satin finish. Aluminum surfaces to be in contact with plaster or concrete during construction shall be protected with a field coat conforming to CID A-A-344.

1.8 SHOP PAINTING

Surfaces of ferrous metal except galvanized surfaces, shall be cleaned and shop coated with the manufacturer's standard protective coating unless otherwise specified. Surfaces of items to be embedded in concrete shall not be painted. Items to be finish painted shall be prepared according to manufacturer's recommendations or as specified.

PART 2 PRODUCTS

2.1 ACCESS DOORS AND PANELS

Doors and panels shall be flush type unless otherwise indicated. Frames for access doors shall be fabricated of not lighter than 1.52 mm (16 gauge) steel with welded joints and finished with anchorage for securing into construction. Access doors shall be a minimum of 350 by 500 mm and of not lighter than 1.9 mm (14 gauge) steel, with stiffened edges, complete with attachments. Access doors shall be hinged to frame and provided with a flush face, screw driver operated latch. Exposed

metal surfaces shall have a shop applied prime coat.

2.2 WELDED WIRE FABRIC

Welded wire fabric where indicated at stair rails shall be constructed of metal fabric attached to structural steel framing members. Fabric shall be 10 gauge galvanized steel wires woven into 50 mm diamond mesh.

2.3 CORNER GUARDS AND SHIELDS

Corner guards and shields for jambs and sills of openings and edges of platforms shall be steel shapes and plates anchored in masonry or concrete with welded steel straps or end weld stud anchors. Corner guards for use with glazed or ceramic tile finish on walls shall be formed of 1.6 mm thick corrosion-resisting steel with polished or satin finish, shall extend 1.5 m above the top of cove base or to the top of the wainscot, whichever is less, and shall be securely anchored to the supporting wall. Corner guards on exterior shall be galvanized. Corner guards for Kitchens shall be stainless steel.

2.4 PIPE GUARDS (BOLLARDS)

Pipe guards shall be heavy duty steel pipe conforming to ASTM A 53/A 53M, Type E or S, weight STD, black finish.

2.5 DOWNSPOUT BOOTS

Downspout boots shall be cast iron with receiving bells sized to fit downspouts.

2.6 FLOOR GRATINGS AND FRAMES

Carbon steel and Aluminum grating shall be designed in accordance with NAAMM MBG 531 to meet the indicated load requirements. Edges shall be banded with bars 6 mm less in height than bearing bars for grating sizes above 19 mm. Banding bars shall be flush with the top of bearing grating. Frames shall be of welded steel construction finished to match the grating. Steel floor gratings and frames shall be galvanized after fabrication.

2.6.1 TRENCH DRAIN GRATES AND FRAMES

The channel for trench drain shall have a built-in slope of 3 mm per 300 mm. The channel sections shall come in either 1.8 mm or 3.6 mm lengths. The channels shall be constructed of minimum 3 mm thick fiberglass.

The grating for the trench drain shall be constructed of ductile iron having a capacity of Load Class C, heavy duty.

2.7 FLOOR PLATES

Floor plates shall be 6 mm thick, raised thread steelgalvanized.

2.8 HANDRAILS

Handrails shall be designed to resist a concentrated load of 890 N (200 pounds) in any direction at any point of the top of the rail or 292 Newtons per meter (20 pounds per foot) applied horizontally to top of

the rail, whichever is more severe.

2.8.1 Steel Handrails, Including Carbon Steel Inserts

Steel handrails, including inserts in concrete, shall be steel pipe conforming to ASTM A 53/A 53M or structural tubing conforming to ASTM A 500, Grade A or B of equivalent strength. Steel railings shall be 40 mm nominal size. Railings shall be hot-dip galvanized and shop painted. Pipe collars shall be steel.

a. Joint posts, rail, and corners shall be fabricated by one of the following methods:

(1) Flush type rail fittings of commercial standard, welded and ground smooth with railing splice locks secured with 10 mm hexagonal recessed-head setscrews.

(2) Mitered and welded joints by fitting post to top rail and intermediate rail to post, mitering corners, groove welding joints, and grinding smooth. Railing splices shall be butted and reinforced by a tight fitting interior sleeve not less than 150 mm long.

(3) Railings may be bent at corners in lieu of jointing, provided bends are made in suitable jigs and the pipe is not crushed.

b. Removable sections, toe-boards, and brackets shall be provided as indicated.

2.9 LADDERS

Ladders shall be galvanized steel or aluminum, fixed rail type in accordance with ANSI A14.3.

2.10 MISCELLANEOUS

Miscellaneous plates and shapes for items that do not form a part of the structural steel framework, such as lintels, sill angles, miscellaneous mountings, and frames, shall be provided to complete the work.

2.11 PARTITIONS, DIAMOND MESH TYPE (OMAR FUNDED)

Partitions shall be constructed of metal fabric attached to structural steel framing members. Fabric shall be 10 gauge steel wires woven into 38 mm diamond mesh with wire secured through weaving channels. Framing members shall be channels 38 by 3 mm minimum size. Channel frames shall be mortised and tenoned at intersections. Steel frames, posts, and intermediate members shall be of the sizes and shapes indicated. Cast-iron floor shoes and caps shall have setscrew adjustment. Doors and grilles shall be provided as indicated, complete with hardware and accessories including sliding mechanisms, locks, guard plates, sill shelves and brackets, and fixed pin butts. Doors and grilles shall have cover plates as indicated. Dutch doors shall have a lock for each leaf. A continuous rubber bumper shall be provided at bottom of grille frame. Locks shall be bronze, cylinder, mortise type. Keying shall be coordinated with Section 08710 DOOR HARDWARE. Ferrous metal portions of partitions and accessories shall be galvanized.

2.12 CHAINS

Chains shall be galvanized steel, accordance with ASTM A 413/A 413M, Grade 70. Chains shall be nominal 8.7 mm size/diameter, minimum working load limt2.13 kg with special links at each end for attachment to eye bolt. Grade shall be marked on chain. Eye bolts for attachment of chains shall be galvanized 8.7 mm diameter bolt with eye sized to accept chain, anchored as indicated. Two chains shall be furnished for each guarded opening.

2.13 STEEL STAIRS

Steel stairs shall be complete with structural or formed channel stringers, metal pan cement-filled treads, grating treads, landings, columns, handrails, and necessary bolts and other fastenings as indicated. Structural steel shall conform to ASTM A 36/A 36M. Stairs and accessories shall be galvanized and factory primed coated. Risers on stairs with metal pan treads shall be deformed to form a sanitary cove to retain the tread concrete. Integral nosings shall have braces extended into the concrete fill. Gratings for treads and landings shall conform to NAAMM MBG 531. Grating treads shall have slip-resistant nosings.

2.14 STEEL DOOR FRAMES

Steel door frames built from structural shapes shall be neatly mitered and securely welded at the corners with all welds ground smooth. Jambs shall be provided with 50 by 6 by 300 mm bent, adjustable metal anchors spaced not over 760 mm on centers. Provision shall be made to stiffen the top member for all spans over 900 mm. Continuous door stops shall be made of 38 by 16 mm bars.

2.15 TRENCH COVERS, FRAMES, AND LINERS

Trench covers shall be designed to meet the indicated load requirements. Trench frames and anchors shall be all welded steel construction designed to match cover. Covers shall be secured to frame, and shall be raised-tread, or steel floor plate. Grating opening widths shall not exceed 25 mm. Trench liners shall be cast iron with integral frame for cover.

PART 3 EXECUTION

3.1 GENERAL INSTALLATION REQUIREMENTS

All items shall be installed at the locations shown and according to the manufacturer's recommendations. Items listed below require additional procedures as specified.

3.2 REMOVABLE ACCESS PANELS

A removable access panel not less than 300 by 300 mm shall be installed directly below each valve, flow indicator, damper, or air splitter that is located above the ceiling, other than an acoustical ceiling, and that would otherwise not be accessible.

3.3 DOOR GUARD FRAME

Door guard frame shall be mounted over the glazed opening using 6 mm

lag bolts on the interior of wood doors or tamperproof through bolts on the interior of metal doors.

3.4 INSTALLATION OF PIPE GUARDS

Pipe guards shall be set vertically in concrete piers. Piers shall be constructed of, and the hollow cores of the pipe filled with, concrete having a compressive strength of 21 MPa.

3.5 INSTALLATION OF DOWNSPOUT BOOTS

Downspouts shall be secured to building through integral lips with appropriate fasteners.

3.6 ATTACHMENT OF HANDRAILS

Toeboards and brackets shall be installed where indicated. Splices, where required, shall be made at expansion joints. Removable sections shall be installed as indicated.

3.6.1 Installation of Steel Handrails

Installation of steel handrails in cast-in-place concreteshall be in pipe sleeves embedded in concrete and filled with molten lead or sulphur with anchorage covered with standard pipe collar pinned to post or by welding rail to stringer of steel stirs.. Wall mounted handrails shall be by means of masonry with expansion shields and bolts or toggle bolts. Rail ends shall be secured by steel pipe flanges anchored by expansion shields and bolts.

3.7 PARTITION POSTS AND OPENINGS

Posts shall be set in shoes bolted to the floor and in caps tap-screwed to clip angles in overhead construction, as indicated. Openings shall be formed using channels similar to the partition frames at ducts, pipes, and other obstructions.

3.8 DOOR FRAMES

Door frames shall be secured to the floor slab by means of angle clips and expansion bolts. Continuous door stops shall be welded to the frame or tap screwed with countersunk screws at no more than 450 mm centers, assuring in either case full contact with the frame. Any necessary reinforcements shall be made and the frames shall be drilled and tapped as required for hardware.

3.9 TRENCH FRAMES AND COVERS

Trench frames and covers shall finish flush with the floor.

-- End of Section --

SECTION 07412

NON-STRUCTURAL STANDING SEAM METAL ROOFING SYSTEM (NSSSMRS)
08/00

PART 1 GENERAL

1.1 REFERENCES

The publications listed below form a part of this specification to the extent referenced. The publications are referred to in the text by basic designation only.

AMERICAN SOCIETY FOR TESTING AND MATERIALS (ASTM)

ASTM A 463/A 463M	(1997) Steel Sheet, Aluminum-Coated, by the Hot-Dip Process
ASTM A 653/A 653M	(1998) Steel Sheet, Zinc-Coated (Galvanized) or Zinc-Iron Alloy-Coated (Galvannealed) by the Hot-Dip Process
ASTM A 792/A 792M	(1997) Steel Sheet, 55% Aluminum-Zinc Alloy-Coated by the Hot-Dip Process
ASTM C 518	(1998) Steady-State Heat Flux Measurements and Thermal Transmission Properties by Means of the Heat Flow Meter Apparatus
ASTM C 1289	(1998) Faced Rigid Cellular Polyisocyanurate Thermal Insulation Board
ASTM D 522	(1993a) Mandrel Bend Test of Attached Organic Coatings
ASTM D 523	(1989; R 1994) Specular Gloss
ASTM D 610	(1995) Evaluating Degree of Rusting on Painted Steel Surfaces
ASTM D 714	(1987; R 1994) Evaluating Degree of Blistering of Paints
ASTM D 968	(1993) Abrasion Resistance of Organic Coatings by Falling Abrasive
ASTM D 1308	(1987; R 1998) Effect of Household Chemicals on Clear and Pigmented Organic Finishes
ASTM D 1654	(1992) Evaluation of Painted or Coated Specimens Subjected to Corrosive Environments

ASTM D 2244	(1995) Calculation of Color Differences from Instrumentally Measured Color Coordinates
ASTM D 2247	(1997) Testing Water Resistance of Coatings in 100% Relative Humidity
ASTM D 2794	(1993) Resistance of Organic Coatings to the Effects of Rapid Deformation (Impact)
ASTM D 3359	(1997) Measuring Adhesion by Tape Test
ASTM D 4214	(1998) Evaluating Degree of Chalking of Exterior Paint Films
ASTM D 4587	(1991) Conducting Tests on Paint and Related Coatings and Materials Using a Fluorescent UV-Condensation Light- and Water- Exposure Apparatus
ASTM D 5894	(1996) Standard Practice for Cyclic Salt Fog/UV Exposure of Painted Metal, (Alternating Exposures in a Fog/Dry Cabinet and a UV/Condensation Cabinet
ASTM E 84	(1998e1) Surface Burning Characteristics of Building Materials

UNDERWRITERS LABORATORIES (UL)

UL 580	(1994; Rev thru Feb 1998) Tests for Uplift Resistance of Roof Assemblies

1.2 GENERAL REQUIREMENTS

The Contractor shall furnish a commercially available roofing system which satisfies the specified design and additional requirements contained herein. The roofing system shall be provided by the Contractor as a complete system, as tested and approved in accordance with UL 580. Roof panels, components, transitions, accessories, and assemblies shall be supplied by the same roofing system manufacturer.

1.2.1 Non-Structural Standing Seam Metal Roofing System

The NSSSMRS covered under this specification shall include the entire roofing system; the metal roof panels, fasteners, connectors, roof securement components, and assemblies tested and approved in accordance with UL 580. In addition, the system shall consist of panel finishes, slip sheet, insulation, all accessories, components, and trim and all connections with roof panels. This includes roof penetration items such as vents, curbs, skylights; interior or exterior gutters and downspouts, eaves, ridge, hip, valley, rake, gable, wall, or other roof system flashings installed and any other components specified within this contract to provide a weathertight roof system; and items specified in other sections of the specifications that are part of the system.

1.2.2 Manufacturer

The NSSSMRS shall be the product of a manufacturer who has been in the

practice of manufacturing metal roofs for a period of not less than 3 years and has been involved in at least five projects similar in size and complexity to this project.

If the installer is not employed by the manufacturer, a technical representative of the SSMRS manufacturer shall be present on site to approve the mockup panel and at the beginning of the roof installation and for a minimum of four (4) days thereafter. The representative shall have a minimum of 5 years experience with the same manufacturer and type of system being installed. The representative shall verify that the roof is being installed in accordance with the manufacturer's approved standards. The representative shall inspect the roof at the completion of the work and verify in writing to the Contracting Officer that the entire installation meets the manufacturer's approved requirements for a full premium 20 year weathertightness warranty. The technical representative shall immediately bring to the attention of the Contracting Officer any work that is not in compliance with the manufacturer's requirements. Corrective action shall be taken by the installer to bring installation into full compliance with the manufacture's requirements. The technical representative shall sign the form at the end of this section and turn it in to the Contracting Officer on the completion of the roofing work.

1.2.3 Installer

The installer shall be certified by the NSSSMRS manufacturer to have experience in installing at least three projects that are of comparable size, scope and complexity as this project for the particular roof system furnished.

The installer may be either employed by the manufacturer or be an independent installer trained and approved by the manufacturer. The installer shall be a member of the National Roofing Contractor's Association (NRCA). The installer shall sign the form at the end of this section stating that plans and specifications have been thoroughly reviewed and the roof as designed qualifies for the manufacturer's premium 20 year weathertightness warranty and provide a letter from the manufacturer supporting this claim.

1.3 DESIGN LOADS

The NSSSMRS assembly shall be tested as defined in UL 580 Construction No. 238A, 336, 345A or 354A and shall be capable of resisting the wind uplift pressures shown on the contract drawings or, as a minimum, shall be approved to resist wind uplift pressures of UL 580, Class 90.

1.4 PERFORMANCE REQUIREMENTS

The roofing system supplied shall conform to the roof slope and uplift pressures shown on the contract drawings. Roof panels shall be free to move in response to the expansion and contraction forces resulting from a total of 65.56 degree temperature range during the life of the structure. The Contractor shall furnish a commercially available roofing system which satisfies all the specified requirements.

1.5 SUBMITTALS

Government approval is required for submittals with a "G" designation; submittals not having a "G" designation are for information only. When

used, a designation following the "G" designation identifies the office that will review the submittal for the Government. The following shall be submitted in accordance with Section 01330 SUBMITTAL PROCEDURES:

SD-03 Product Data

Roof System; See Section 09915 COLOR SCHEDULE; G

Roof System Manuf. Product submitted as an "or equal"; G

Provide data on system.

SD-02 Shop Drawings

Metal Roofing; G

a. Drawings consisting of catalog cuts, flashing details, erection drawings, shop coating and finishing specifications, and other data as necessary to clearly describe materials, sizes, layouts, construction details, fasteners, and erection. Drawings shall be provided by the roofing system manufacturer.

b. Drawings showing the UL 580, Class 90 tested roof system assembly.

SD-07 Certificates

Roof Panels;
Installation;
Accessories;

Certificates attesting that the panels and accessories conform to the specified requirements. Certificate for the roof assembly shall certify that the assembly complies with the material and fabrication requirements specified and is suitable for the installation at the indicated design slope. Certified laboratory test reports showing that the sheets to be furnished are produced under a continuing quality control program and that at least 3 representative samples of similar material to that which will be provided on this project have been previously tested and have met the quality standards specified for factory color finish.

Insulation;

Certificate attesting that the polyisocyanurate insulation furnished for the project contains recovered material, and showing an estimated percent of such recovered material.

Installer;

Certification of installer.

Warranties;

At the completion of the project, signed copies of the 5-year Warranty for the NSSSMRS, a sample copy of which is attached to this section, and the 20-year Manufacturer's Material and Weathertightness Warranties shall be given to the Contracting Officer.

SD-04 Samples

Accessories; G

One sample of each type of flashing, trim, fascia, closure, cap, underlayment and similar items. Size shall be sufficient to show construction and configuration.

Roof Panels; G

One piece of each type and finish to be used, 225 mm long, full width.

Fasteners; G

Two samples of each type to be used with statement regarding intended use. If so requested, random samples of screws, bolts, nuts, and washers as delivered to the jobsite shall be taken in the presence of the Contracting Officer and provided to the Contracting Officer for testing to establish compliance with specified requirements.

Gaskets and Insulating Compounds; G

Two samples of each type to be used and descriptive data.

Sealant; G.

One sample, approximately 0.5 kg, and descriptive data.

1.6 MOCKUP

Provide mockup of roofing system, 2400mm long x 1200mm wide 8 feet long by 4 feet wide which includes a corner condition, associated attachments, accessories, flashings, joints and junctions terminating items (roof edge conditions), metal decking and insulation. the mockup will be located where directed by the Contracting Officer and shall not remain as part of the Work.

1.7 DELIVERY AND STORAGE

Materials shall be delivered to the site in a dry and undamaged condition and stored out of contact with the ground. Materials shall be covered with weather tight coverings and kept dry. Material shall not be covered with plastic where such covering will allow sweating and condensation. Plastic may be used as tenting with air circulation allowed. Storage conditions shall provide good air circulation and protection from surface staining.

1.8 WARRANTIES

The NSSSMRS shall be warranted as outlined below. Any emergency temporary repairs conducted by the owner shall not negate the warranties.

1.8.1 Contractor's Weathertightness Warranty

The NSSSMRS shall be warranted by the Contractor on a no penal sum basis for a period of five years against material and workmanship deficiencies; system deterioration caused by exposure to the elements and/or inadequate resistance to specified service design loads, water

leaks, and wind uplift damage. The roofing covered under this warranty shall include the entire roofing system, including but not limited to, the roof panels, fasteners, connectors, roof securement components, and assemblies tested and approved in accordance with UL 580. In addition, the system shall consist of panel finishes, slip sheet, insulation, all accessories, components, and trim and all connections with roof panels. This includes roof penetration items such as vents, curbs, skylights; interior or exterior gutters and downspouts; eaves, ridge, hip, valley, rake, gable, wall, or other roof system flashings installed and any other components specified within this contract to provide a weathertight roof system; and items specified in other sections of the specifications that are part of the roof system. All material and workmanship deficiencies, system deterioration caused by exposure to the elements and/or inadequate resistance to service design loads, water leaks and wind uplift damage shall be repaired as approved by the Contracting Officer. See the attached Contractor's required warranty for issue resolution of warrantable defects. This warranty shall warrant and cover the entire cost of repair or replacement, including all material, labor, and related markups. The Contractor shall supplement this warranty with written warranties from the installer and system manufacturer, which shall be submitted along with Contractor's warranty; however, the Contractor shall be ultimately responsible for this warranty. The Contractor's written warranty shall be as outlined in attached WARRANTY FOR NON-STRUCTURAL STANDING SEAM METAL ROOFING SYSTEM, and shall start upon final acceptance of the facility. It is required that the Contractor provide a separate bond in an amount equal to the installed total roofing system cost in favor of the owner (Government) covering the Contractor's warranty responsibilities effective throughout the 5 year Contractor's warranty period for the entire roofing system as outlined above.

1.8.2 Manufacturer's Material Warranties

The Contractor shall furnish, in writing, the following manufacturer's material warranties which cover all NSSSMRS components such as roof panels, flashing, accessories, and trim, fabricated from coil material:

a. A manufacturer's 20 year material warranty warranting that the aluminum, zinc-coated steel, aluminum-zinc alloy coated steel or aluminum-coated steel as specified herein will not rupture, fail structurally, or perforate under normal atmospheric conditions at the site. Liability under this warranty shall be limited exclusively to the cost of either repairing or replacing nonconforming, ruptured, perforated, or structurally failed coil material.

b. A manufacturer's 20 year exterior material finish warranty warranting that the factory color finish, under normal atmospheric conditions at the site, will not crack, peel, or delaminate; chalk in excess of a numerical rating of 8 when measured in accordance with ASTM D 4214; or fade or change colors in excess of 5 NBS units as measured in accordance with ASTM D 2244. Liability under this warranty is exclusively limited to refinishing or replacing the defective coated coil material.

c. A roofing system manufacturer's 20 year system weathertightness warranty.

1.9 COORDINATION MEETINGS

A coordination meeting shall be held within 45 days after contract award for mutual understanding of the metal roof system contract requirements. This meeting shall take place at the building site and shall include representatives from the Contactor, thru roofing system manufacturer, the roofing supplier, the installer, the designer, and the Contracting Officer. All items required by paragraph SUBMITTALS shall be discussed, including applicable standard manufacturer shop drawings and the approval process. The Contractor shall coordinate time and arrangements for the meeting. two weeks prior to the roof installation, the Contractor shall have a second meeting with the Contracting Officer, installer, manufacturer's representative and supplier to coordinate the roof materials delivery and storage, roof installation and final approval of the mockup panel.

PART 2 PRODUCTS

2.1 ROOF PANELS

Panels shall be steel or aluminum and shall have a factory color finish. Length of sheets shall be sufficient to cover the entire length of any unbroken roof slope for slope lengths that do not exceed 9 m. Sheets longer than 9 m may be furnished if approved by the Contracting Officer. Width of sheets shall provide nominal minimum 400 mm of coverage in place. Design provisions shall be made for thermal expansion and contraction consistent with the type of system to be used. All sheets shall be either square-cut or miter-cut. The ridge cap shall be installed as recommended by the metal roofing manufacturer. Height of corrugations, ribs, or seams, at overlap of adjacent roof sheets shall be the building manufacturer's standard for the indicated roof slope.

2.1.1 Steel Panels

Zinc-coated steel conforming to ASTM A 653/A 653M; aluminum-zinc alloy coated steel conforming to ASTM A 792/A 792M, AZ 50 coating; or aluminum-coated steel conforming to ASTM A 463/A 463M, Type 2, coating designation T2 65. Uncoated roof panels shall be 22 gage thick minimum. Panels shall be within 95 percent of the nominal thickness.

2.2 ACCESSORIES

Accessories shall be compatible with the roofing furnished. Flashing, trim, metal closure strips, caps, and similar metal accessories shall be not less than the minimum thicknesses specified for roof panels. Critical locations such as valleys shall receive underlying flashing that acts as secondary protection. Valley pans shall include a minimum 25 mm high diverter in the middle of the valley. Exposed metal accessories shall be finished to match the panels furnished. Molded closure strips shall be bituminous-saturated fiber, closed-cell or solid-cell synthetic rubber or neoprene, or polyvinyl chloride premolded to match configuration of the panels and shall not absorb or retain water.

2.2.1 Gutters and Downspouts

Gutters and downspouts shall be fabricated of zinc coated steel or aluminum zinc alloy coated steel and shall have a size and shape as

indicated. All accessories for the complete installation shall be furnished. Accessories shall include gutter brackets, downspout elbows, straps and fasteners.

2.3 FASTENERS

Fasteners for roof panels shall be zinc-coated steel, aluminum, or nylon capped steel, type and size as recommended by the manufacturer to meet the performance requirements. Fasteners for accessories shall be the manufacturer's standard. Exposed roof fasteners shall be gasketed or have gasketed washers on the exterior side of the roofing to waterproof the fastener penetration. Washer material shall be compatible with the panels; and gasketed portion of fasteners or washers shall be neoprene or other equally durable elastomeric material approximately 3 mm thick.

2.3.1 Concealed Anchor Clips

Concealed anchor clips shall have factory punched or drilled holes for attachment. There shall be a minimum of two fasteners per clip. Clips shall be made to accommodate the total thermal movement required.

2.4 FACTORY COLOR FINISH

Panels shall have a factory applied polyvinylidene fluoride finish on the exposed side. The exterior finish shall consist of a baked-on topcoat with an appropriate prime coat. Color shall match the color indicated on the drawings and in Section 09915 COLOR SCHEDULE. The exterior coating shall be a nominal 0.025mm thickness consisting of a topcoat of not less than 0.018 mm dry film thickness and the paint manufacturer's recommended primer of not less than 0.005mm thickness. The exterior color finish shall meet the test requirements specified below.

2.4.1 Cyclic Salt Fog/UV Test

A sample of the sheets shall withstand a cyclic corrosion test for a minimum of 2016 hours in accordance with ASTM D 5894, including the scribe requirement in the test. Immediately upon removal of the panel from the test, the coating shall receive a rating of not less than 10, no blistering, as determined by ASTM D 714; 10, no rusting, as determined by ASTM D 610; and a rating of 6, over 2.0 to 3.0 mm failure at scribe, as determined by ASTM D 1654.

2.4.2 Formability Test

When subjected to testing in accordance with ASTM D 522 Method B, 3 mm diameter mandrel, the coating film shall show no evidence of fracturing to the naked eye.

2.4.3 Accelerated Weathering, Chalking Resistance and Color Change

A sample of the sheets shall be tested in accordance with ASTM D 4587, test condition D for 2000 total hours. The coating shall withstand the weathering test without cracking, peeling, blistering, loss of adhesion of the protective coating, or corrosion of the base metal. Protective coating that can be readily removed from the base metal with tape in

accordance with ASTM D 3359, Test Method B, shall be considered as an area indicating loss of adhesion. Following the accelerated weathering test, the coating shall have a chalk rating not less than No. 8 in accordance with ASTM D 4214 test procedures, and the color change shall not exceed 5 CIE or Hunter Lab color difference (delta E) units in accordance with ASTM D 2244.

2.4.4 Humidity Test

When subjected to a humidity cabinet test in accordance with ASTM D 2247 for 1000 hours, a scored panel shall show no signs of blistering, cracking, creepage or corrosion.

2.4.5 Impact Resistance

Factory-painted sheet shall withstand direct and reverse impact in accordance with ASTM D 2794 13 mm diameter hemispherical head indenter, equal to 6.7 times the metal thickness in mm, expressed in N-meters, with no cracking.

2.4.6 Abrasion Resistance Test

When subjected to the falling sand test in accordance with ASTM D 968, Method A, the coating system shall withstand a minimum of 50 liters of sand before the appearance of the base metal. The term "appearance of base metal" refers to the metallic coating on steel or the aluminum base metal.

2.4.7 Specular Gloss

Finished roof surfaces shall have a specular gloss value of 30 plus or minus at 60 degrees when measured in accordance with ASTM D 523.

2.4.8 Pollution Resistance

Coating shall show no visual effects when covered spot tested in a 10 percent hydrochloric acid solution for 24 hours in accordance with ASTM D 1308.

2.5 UNDERLAYMENTS

2.5.1 Rubberized Underlayment

Rubberized underlayment shall be a self adhering, heat resistant membrane, minimum 0.76 mm thickequal to "Vycor Ultra" as manufactured by Grace Construction Products, "Dri-Start HR" as manufactured by Carlisle, or or equal products by other manufacturers.

2.6 INSULATION

Thermal resistance of insulation shall be not less than the R-values shown on the contract drawings. R-values shall be determined at a mean temperature of 24 degrees C in accordance with ASTM C 518. Insulation shall be a standard product with the insulation manufacturer, factory marked or identified with insulation manufacturer's name or trademark and R-value. Identification shall be on individual pieces or individual packages. Insulation , including facings, shall have a flame spread not in excess of 75 and a smoke developed rating not in excess of 150when

tested in accordance with ASTM E 84. The stated R-value of the insulation shall be certified by an independent Registered Professional Engineer if tests are conducted in the insulation manufacturer's laboratory.

2.6.1 Rigid Board Insulation for Use Above a Roof Deck

2.6.1.1 Polyisocyanurate

Polyisocyanurate insulation shall conform to ASTM C 1289, Type I, Class 2 (having a minimum recovered material content of 9 percent by weight of core material in the polyisocyanurate portion). For impermeable faced polyisocyanurate (Ex: aluminum foil) the maximum design R-value per 25 mm of insulation used shall be 1.27

2.7 SHEATHING BOARD

Glass mat gypsum sheathing shall conform to ASTM C 1177/C 1177M, shall have a water-resistant core with water and mold/mildew resistant fiberglass faces embedded into the core and shall have square edges 1200 mm wide by 12.7 mm thick.

2.8 SEALANT

Sealant shall be an elastomeric type containing no oil or asphalt. Exposed sealant shall be clear and shall cure to a rubberlike consistency. Factory applied sealant shall be placed in the roof panel standing seam ribs.

2.9 GASKETS AND INSULATING COMPOUNDS

Gaskets and insulating compounds shall be nonabsorptive and suitable for insulating contact points of incompatible materials. Insulating compounds shall be nonrunning after drying.

PART 3 EXECUTION

3.1 INSTALLATION

Installation shall be in accordance with the manufacturer's erection instructions and drawings. Dissimilar materials which are not compatible when contacting each other shall be insulated by means of gaskets or insulating compounds. Improper or mislocated drill holes shall be plugged with an oversize screw fastener and gasketed washer; however, sheets with an excess of such holes or with such holes in critical locations shall not be used. Exposed surfaces and edges shall be kept clean and free from sealant, metal cuttings, hazardous burrs, and other foreign material. Stained, discolored, or damaged sheets shall be removed from the site.

3.1.1 Roofing

Roof panels shall be installed with the standing seams in the direction of the roof slope. The standing seams shall be sealed around the concealed clip using a mechanical seaming machine. Side and end lap distances, joint sealing, and fastening and spacing of fasteners shall be in accordance with manufacturer's standard practice. Spacing of

exposed fasteners shall present an orderly appearance and shall be permitted only at rakes, eaves, panel splices and where required for the attachment of flashings, gutter and similar accessories. Side laps and end laps of roof panels and joints at accessories shall be sealed. Fasteners shall be driven normal to the surface. Accessories shall be fastened into substrate, except as otherwise approved. Closure strips shall be provided as indicated and where necessary to provide weathertight construction. The seaming machine shall be recalibrated on a daily basis to insure that end laps of panels are being sealed in conformance with the manufacturer's specifications.

3.1.2 Concealed Anchor Clips

Roof panels shall be fastened to the roof deck with concealed fastening clips. Clips shall be attached to the metal deck with bolts or screws. The maximum distance between clips and the spacing and type of clip shall conform with UL 580 Class I-90 performance requirements for the specific system to be installed on the project. In no case shall the distance between fasteners exceed 1500mm on center.

3.1.3 Underlayment

**Underlayment shall be installed over the entire field of the roof. It shall be installed directly over the *sheathing*. All underlayments shall be installed so that successive strips overlap the next lower strip in shingle fashion. Underlayments shall be installed in accordance with the manufacturer's written instructions. The underlayments shall ensure that any water that penetrates below the metal roofing panels will drain outside of the building envelope.

**

3.2 INSULATION INSTALLATION

Insulation shall be installed as indicated and in accordance with manufacturer's instructions. Insulation shall be continuous over entire roof surface. Where expansion joints, terminations, and other connections are made, the cavity shall be filled with batt insulation providing equivalent R-Value and perm rating as remaining insulation.

3.2.1 Board Insulation

Rigid insulation shall be laid in close contact. If more than one layer of insulation is required, joints in the second layer shall be offset from joints in the first layer. Rigid insulation shall be attached to the metal roof deck with bearing plates and fasteners, as recommended by the insulation manufacturer, so that the insulation joints are held tight against each other, with no less than 1 fastener and bearing plate per 0.37 square meter of insulation. Layout and joint pattern of insulation and fasteners shall be indicated on the shop drawings.

3.3 CONTRACTORS FIVE YEAR WARRANTY

CONTRACTOR'S FIVE (5) YEAR NO PENAL SUM WARRANTY
FOR
NON-STRUCTURAL STANDING SEAM METAL ROOFING SYSTEM

FACILITY DESCRIPTION_____

BUILDING NUMBER:_____

CORPS OF ENGINEERS CONTRACT NUMBER:_____

CONTRACTOR

CONTRACTOR:_____

ADDRESS:_____

POINT OF CONTACT:_____

TELEPHONE NUMBER:_____

OWNER

OWNER:_____

ADDRESS:_____

POINT OF CONTACT:_____

TELEPHONE NUMBER:_____

CONSTRUCTION AGENT

CONSTRUCTION AGENT:_____

ADDRESS:_____

POINT OF CONTACT:_____

TELEPHONE NUMBER:_____

CONTRACTOR'S FIVE (5) YEAR NO PENAL SUM WARRANTY
FOR
NON-STRUCTURAL STANDING SEAM METAL ROOFING SYSTEM
(continued)

THE NON-STRUCTURAL STANDING SEAM METAL ROOFING SYSTEM INSTALLED ON THE ABOVE NAMED BUILDING IS WARRANTED BY _____ FOR A PERIOD OF FIVE (5) YEARS AGAINST WORKMANSHIP AND MATERIAL DEFICIENCES, WIND DAMAGE, STRUCTURAL FAILURE, AND LEAKAGE. THE ROOFING SYSTEM COVERED UNDER THIS WARRANTY SHALL INCLUDE, BUT SHALL NOT BE LIMITED TO, THE FOLLOWING: THE ENTIRE ROOFING SYSTEM, MANUFACTURER SUPPLIED FRAMING AND STRUCTURAL MEMBERS, METAL ROOF PANELS, FASTENERS, CONNECTORS, ROOF SECUREMENT COMPONENTS, AND ASSEMBLIES TESTED AND APPROVED IN ACCORDANCE WITH UL 580. IN ADDITION, THE SYSTEM PANEL FINISHES, SLIP SHEET, INSULATION, VAPOR RETARDER, ALL ACCESSORIES, COMPONENTS, AND TRIM AND ALL CONNECTIONS ARE INCLUDED. THIS INCLUDES ROOF PENETRATION ITEMS SUCH AS VENTS, CURBS, SKYLIGHTS; INTERIOR OR EXTERIOR GUTTERS AND DOWNSPOUTS; EAVES, RIDGE, HIP, VALLEY, RAKE, GABLE, WALL, OR OTHER ROOF SYSTEM FLASHINGS INSTALLED AND ANY OTHER COMPONENTS SPECIFIED WITHIN THIS CONTRACT TO PROVIDE A WEATHERTIGHT ROOF SYSTEM; AND ITEMS SPECIFIED IN OTHER SECTIONS OF THE SPECIFICATIONS THAT ARE PART OF THE NON-STRUCTURAL METAL ROOFING SYSTEM.

ALL MATERIAL DEFICIENCIES, WIND DAMAGE, STRUCTURAL FAILURE, AND LEAKAGE ASSOCIATED WITH THE ROOFING SYSTEM COVERED UNDER THIS WARRANTY SHALL BE REPAIRED AS APPROVED BY THE CONTRACTING OFFICER. THIS WARRANTY SHALL COVER THE ENTIRE COST OF REPAIR OR REPLACEMENT, INCLUDING ALL MATERIAL, LABOR, AND RELATED MARKUPS. THE ABOVE REFERENCED WARRANTY COMMENCED ON THE DATE OF FINAL ACCEPTANCE ON _____ AND WILL REMAIN IN EFFECT FOR STATED DURATION FROM THIS DATE.

SIGNED, DATED, AND NOTARIZED (BY COMPANY PRESIDENT)

_____

(Company President) (Date)

CONTRACTOR'S FIVE (5) YEAR NO PENAL SUM WARRANTY
FOR
NON-STRUCTURAL STANDING SEAM METAL ROOFING SYSTEM
(continued)

THE CONTRACTOR SHALL SUPPLEMENT THIS WARRANTY WITH WRITTEN WARRANTIES FROM THE MANUFACTURER AND/OR INSTALLER OF THE ROOFING SYSTEM, WHICH SHALL BE SUBMITTED ALONG WITH THE CONTRACTOR'S WARRANTY. HOWEVER, THE CONTRACTOR WILL BE ULTIMATELY RESPONSIBLE FOR THIS WARRANTY AS OUTLINED IN THE SPECIFICATIONS AND AS INDICATED IN THIS WARRANTY EXAMPLE.

EXCLUSIONS FROM COVERAGE

1. NATURAL DISASTERS, ACTS OF GOD (LIGHTNING, FIRE, EXPLOSIONS, SUSTAINED WIND FORCES IN EXCESS OF THE DESIGN CRITERIA, EARTHQUAKES, AND HAIL).

2. ACTS OF NEGLIGENCE OR ABUSE OR MISUSE BY GOVERNMENT OR OTHER PERSONNEL, INCLUDING ACCIDENTS, VANDALISM, CIVIL DISOBEDIENCE, WAR, OR DAMAGE CAUSED BY FALLING OBJECTS.

3. DAMAGE BY STRUCTURAL FAILURE, SETTLEMENT, MOVEMENT, DISTORTION, WARPAGE, OR DISPLACEMENT OF THE BUILDING STRUCTURE OR ALTERATIONS MADE TO THE BUILDING.

4. CORROSION CAUSED BY EXPOSURE TO CORROSIVE CHEMICALS, ASH OR FUMES GENERATED OR RELEASED INSIDE OR OUTSIDE THE BUILDING FROM CHEMICAL PLANTS, FOUNDRIES, PLATING WORKS, KILNS, FERTILIZER FACTORIES, PAPER PLANTS, AND THE LIKE.

5. FAILURE OF ANY PART OF THE ROOFING SYSTEM DUE TO ACTIONS BY THE OWNER TO INHIBIT FREE DRAINAGE OF WATER FROM THE ROOF AND GUTTERS AND DOWNSPOUTS OR ALLOW PONDING WATER TO COLLECT ON THE ROOF SURFACE. CONTRACTOR'S DESIGN SHALL INSURE FREE DRAINAGE FROM THE ROOF AND NOT ALLOW PONDING WATER.

6. THIS WARRANTY APPLIES TO THE NON-STRUCTURAL METAL ROOFING SYSTEM. IT DOES NOT INCLUDE ANY CONSEQUENTIAL DAMAGE TO THE BUILDING INTERIOR OR CONTENTS WHICH IS COVERED BY THE WARRANTY OF CONSTRUCTION CLAUSE INCLUDED IN THIS CONTRACT.

7. THIS WARRANTY CANNOT BE TRANSFERRED TO ANOTHER OWNER WITHOUT WRITTEN CONSENT OF THE CONTRACTOR; AND THIS WARRANTY AND THE CONTRACT PROVISIONS WILL TAKE PRECEDENCE OVER ANY CONFLICTS WITH STATE STATUTES.

**

CONTRACTOR'S FIVE (5) YEAR NO PENAL SUM WARRANTY
FOR
NON-STRUCTURAL STANDING SEAM METAL ROOFING SYSTEM
(continued)

**REPORTS OF LEAKS AND ROOF SYSTEM DEFICIENCIES SHALL BE RESPONDED TO WITHIN 48 HOURS OF RECEIPT OF NOTICE, BY TELEPHONE OR IN WRITING, FROM EITHER THE OWNER OR CONTRACTING OFFICER. EMERGENCY REPAIRS TO PREVENT FURTHER ROOF LEAKS SHALL BE INITIATED IMMEDIATELY; A WRITTEN PLAN SHALL BE SUBMITTED FOR APPROVAL TO REPAIR OR REPLACE THIS ROOF SYSTEM WITHIN SEVEN (7) CALENDAR DAYS. ACTUAL WORK FOR PERMANENT REPAIRS OR REPLACEMENT SHALL BE STARTED WITHIN 30 DAYS AFTER RECEIPT OF NOTICE, AND COMPLETED WITHIN A REASONABLE TIME FRAME. IF THE CONTRACTOR FAILS TO ADEQUATELY RESPOND TO THE WARRANTY PROVISIONS, AS STATED IN THE CONTRACT AND AS CONTAINED HEREIN, THE CONTRACTING OFFICER MAY HAVE THE NON-STRUCTURAL METAL ROOF SYSTEM REPAIRED OR REPLACED BY OTHERS AND CHARGE THE COST TO THE CONTRACTOR.

IN THE EVENT THE CONTRACTOR DISPUTES THE EXISTENCE OF A WARRANTABLE DEFECT, THE CONTRACTOR MAY CHALLENGE THE OWNER'S DEMAND FOR REPAIRS AND/OR REPLACEMENT DIRECTED BY THE OWNER OR CONTRACTING OFFICER EITHER BY REQUESTING A CONTRACTING OFFICER'S DECISION UNDER THE CONTRACT DISPUTES ACT, OR BY REQUESTING THAT AN ARBITRATOR RESOLVE THE ISSUE. THE REQUEST FOR AN ARBITRATOR MUST BE MADE WITHIN 48 HOURS OF BEING NOTIFIED OF THE DISPUTED DEFECTS. UPON BEING INVOKED, THE PARTIES SHALL, WITHIN TEN (10) DAYS, JOINTLY REQUEST A LIST OF FIVE (5) ARBITRATORS FROM THE FEDERAL MEDIATION AND CONCILIATION SERVICE. THE PARTIES SHALL CONFER WITHIN TEN (10) DAYS AFTER RECEIPT OF THE LIST TO SEEK AGREEMENT ON AN ARBITRATOR. IF THE PARTIES CANNOT AGREE ON AN ARBITRATOR, THE CONTRACTING OFFICER AND THE PRESIDENT OF THE CONTRACTOR'S COMPANY WILL STRIKE ONE (1) NAME FROM THE LIST ALTERNATIVELY UNTIL ONE (1) NAME REMAINS. THE REMAINING PERSON SHALL BE THE DULY SELECTED ARBITRATOR. THE COSTS OF THE ARBITRATION, INCLUDING THE ARBITRATOR'S FEE AND EXPENSES, COURT REPORTER, COURTROOM OR SITE SELECTED, ETC., SHALL BE BORNE EQUALLY BETWEEN THE PARTIES. EITHER PARTY DESIRING A COPY OF THE TRANSCRIPT SHALL PAY FOR THE TRANSCRIPT. A HEARING WILL BE HELD AS SOON AS THE PARTIES CAN MUTUALLY AGREE. A WRITTEN ARBITRATOR'S DECISION WILL BE REQUESTED NOT LATER THAN 30 DAYS FOLLOWING THE HEARING. THE DECISION OF THE ARBITRATOR WILL NOT BE BINDING; HOWEVER, IT WILL BE ADMISSIBLE IN ANY SUBSEQUENT APPEAL UNDER THE CONTRACT DISPUTES ACT.

A FRAMED COPY OF THIS WARRANTY SHALL BE POSTED IN THE MECHANICAL ROOM OR OTHER APPROVED LOCATION DURING THE ENTIRE WARRANTY PERIOD.

MANUFACTURER'S TECHNICAL REPRESENTATIVE

I_____, A TECHNICAL REPRESENTATIVE EMPLOYED FOR A MINIMUM OF FIVE YEARS BY _____, THE ROOFING MANUFACTURER FOR THIS PROJECT, HEREBY ATEST THAT THE ROOF INSTALLED FOR THIS PROJECT BY _____ WAS CONSTRUCTED AND ASSEMBLED IN ACCORDANCE WITH THE MANUFACTURER'S APPROVED METHODS AND DETAILS AND MEETS THE MANUFACTURER'S PREMIUM 20 YEAR WEATHERTIGHTNESS WARRANTY REQUIREMENTS.

INSTALLER'S STATEMENT ON ROOF WARRANTY

I _____, THE ROOF INSTALLER FOR THIS PROJECT, HEREBY CERTIFY THAT THE PLANS AND SPECIFICATIONS HAVE BEEN THOROUGHLY REVIEWED AND THAT THE PROPOSED ROOF WILL MEET THE DESIGN INTENT AND MANUFACTURER'S REQUIREMENTS FOR A PREMIUM WEATHERTIGHTNESS WARRANTY.

-- End of Section --

SECTION 09915R

COLOR SCHEDULE
06/01

PART 1 GENERAL

1.1 GENERAL

This section covers only the color of the exterior and interior materials and products that are exposed to view in the finished construction. The word "color" as used herein includes surface color and pattern. Requirements for quality and method of installation are covered in other appropriate sections of the specifications. Specific locations where the various materials are required are shown on the drawings. Items not designated for color in this section may be specified in other sections. When color is not designated for items, the Contractor shall propose a color for approval.

1.2 SUBMITTALS

Manufacturers products listed in this specification are referenced to establish a standard of quality. When the specific product listed is submitted by the Contractor, that submittal will be considered For Information Only. When an equal to that named in this specification is submitted, the submittal shall be for Government Approval (G). Government approval is required for submittals with a "G" designation; submittals not having a "G" designation are for information only. When used, a designation following the "G" designation identifies the office that will review the submittal for the Government. The following manufacturers are specifically mentioned in this specification: The following shall be submitted in accordance with Section 01330 SUBMITTAL PROCEDURES:

SD-04 Samples

Contractor Color board;

2 sets of Contractor color boards, 90 days after the Contractor is given Notice to proceed, complying with the following requirements:

a. Contractor Color boards shall reflect all actual finish textures, patterns, and colors required for this contract.

b. The Contractor shall use the project color boards created by the Designer of Record as a guideline in assembling the Contractor color boards.

c. Contractor color boards shall be labeled to indicate the room functions where the samples shall be used.

d. Materials shall be labeled with the finish type, manufacturer's name, pattern, and color reference.

e. Samples shall be on 216 mm x 280 mm(8-1/2 by 11) inch boards with a maximum spread of 650 mm x 840 mm (25-1/2 by 33 inches) for foldouts.

f. Samples for the Contractor color board are required in addition to samples requested in other specification sections.

g. Color boards shall be submitted to the Contracting Officer.

h. Once the submitted Contractor color boards have been approved, and the Contractor desires to change any product, finish, texture, pattern, and/or color, the approved set of Contractor color boards shall be resubmitted with these changes for second Contractor submittal 30 days prior to installation of any finishes, textures, patterns, colors, or product. The Contractor must have approval of the changes before proceeding to install any of the finishes, textures, patterns, colors, or product. These Contractor color boards shall be submitted in conjunction with the other specification sections product submittals.

Section 04200 Concrete Masonry Units
Glazed Concrete Masonry Unit
Trenwyth Industries, Inc.: Astra-Glaze, Color: Astra-Glaze SW Oatmeal;
One Connelly Road
P. O. Box 438
Emigsville, PA 17318
717-767-6868
800-233-1924
Fax: 717-767-4023
Web Site: http://www.trenwyth.com

Clay or Shale Brick Units
Phoenix Brick Yard, Color: Brick-1; 'Grand Canyon Blend' #46, Brick-2;
'Grand Canyon Blend' #20;
1814 S 7th Avenue
Phoenix, AZ 85007
602-258-0444

Precast Concrete Lintels and Sills
Phoenix Brick Yard, Color: Brick-1; 'Grand Canyon Blend' #46, Brick-2;
'Grand Canyon Blend' #20;
1814 S 7th Avenue
Phoenix, AZ 85007
602-258-0444

Manuf. Product submitted as an "or equal"; G

Section 06410 Laminated Clad Architectural Casework
Wilsonart International: Color: PLAM-1; D47-60 'Moccasin', PLAM-2;
4739-60 'Clay Roletta', PLAM-3; 4798-60 'Burnished Ember';
2400 Wilson Pl.
P>O> Box 6110
Temple, TX 76504
800-433-3222
254-207-7000
Web Site: http://www.wilsonart.com

Manuf. Product submitted as an "or equal"; G

Section 07412 Non-structural Standing Seam Metal Roofing System
American Buildings Company: Loc-Seam Profile, Color: equal to AEP-SPAN 'Hemlock Green';
1150 State Docks Road
Eufaula, AL 36027-3344
334-687-2032
888-307-4338
Web Site: http://www.americanbuildings.com

AEP-SPAN: Span-Lok SL218./SL216 Profile, Color: 'Hemlock Green'; FIO
5100 East Grand Avenue
Dallas, TX 75223
800-527-2503
214-827-1740
Fax: 214-828-1394
Web Site: http://www.aep-span.com

Butler Mfg. Co.: VSR Profile, Color: equal to AEP-SPAN 'Hemlock Green'; FIO
700 Karnes Blvd
P. O. Box 419917
Kansas City, MO 64141
816-968-3000
Fax: 816-968-3720
Web Site: http://www.butlermfg.com

SteelOx Systems Inc.: Panel 262 Profile LRX, Color: equal to AEP-SPAN 'Hemlock Green'; FIO
5412 Courseview Drive
P. O. Box 8181, Suite 300
Mason, OH 45040-8181
513-573-5200
Fax: 513-573-5299
Web Site: http://www.steelox.com

Merchant and Evans: Zip-Rib Profile, Color: equal to AEP-SPAN 'Hemlock Green'; IO
100 Connecticut Drive
Burlington, NJ 08016
609-387-3033
Fax: 690-387-4838
Web Site: http://www.ziprib.com

Manuf. Product submitted as an "or equal"; G AE

Section 08120 Aluminum Doors and Frames
Kawneer Company Inc.: Color: Clear anodized;
555 Guthridge Court
Norcross, GA 30092
770-449-5555
Fax: 770-734-1560
Web Site: http://www.kawneer.com

United States Aluminum Commercial Products Group: Color: Clear anodized; FIO
200 Singleton Drive

Waxahachie, TX 75165
972-937-9651
Fax: 972-937-0405
Web Site: http://www.usalum.com

Vistawall Architectural Products: Color: Clear anodized;
P. O. Box 629
803 Airport Road
Terrell, TS 75160
972-551-6100

Manuf. Product submitted as an "or equal"; G AE

Section 08520 Aluminum Windows
EFCO Corporation: Color: Clear anodized;
1000 County Road
Monett, MO 65708
417-235-3193

Kawneer Company Inc.: Color: Clear anodized;
555 Guthridge Court
Norcross, GA 30092
770-449-5555

Wausau Window and Wall Systems: Color: Clear anodized;
1415 West Street
P. O. Box 1746
Wausau, WI 54401
715-845-2161

Manuf. Product submitted as an "or equal"; G AE

Section 08810 Glass and Glazing
Pilkington LOF: Color: Clear;
811 Madison Avenue
P. O. Box 799
Toledo, OH 43695

PPG Industries, Inc.: Color: Clear;
One PPG Place
Pittsburgh, PA 15272
888-774-7732

AFGD, Inc.: Color: Clear;
1600 Parkwood Circle, Suite 300
Atlanta, GA 30339
800-766-2343

Manuf. Product submitted as an "or equal"; G AE

Section 09310 Ceramic Tile
American Olean Tile Co., Inc., Color: To match Crossville Ceramics; FIO
7834 C. F. Hawn Freeway
Dallas, TX 75217
215-393-2237

Crossville Ceramics.: Color: CT-1 (Floor); VS12 'Rose Fresco', CT-2 (Floor); A340 'Nectar', CT-3 (Floor); A634 'Terra Rosatta', CT-4

(Wall); A238 'Shetland', CT-5 (Wall); A340 'Nectar', CT-6 (Wall); A634 'Terra Rosatta';
P.O. Box 1168
Crossville, TN 38557
931-484-2110
www.crossville-ceramics.com

Dal-Tile Corp. Color: To match Crossville Ceramics;
7834 C. F. Hawn Freeway
P. O. Box 17130
Dallas, TX 75217
214-398-4465

Monarch Ceramic Tile: Color: To match Crossville Ceramics;
834 Richwood Road
Florence, AL 35630
972-725-3157

Manuf. Product submitted as an "or equal"; G AE

Quarry Tile:
American Olean Tile Co., Inc., Color: To Match Dal-Tile;
7834 C. F. Hawn Freeway
Dallas, TX 75217
215-393-2237

Dal-Tile Corp., Color: QT-1; T02 'Red Flash';
7834 C. F. Hawn Freeway
P. O. Box 17130
Dallas, TX 75217
214-398-4465

Monarch Ceramic Tile: Color: To Match Dal-Tile;
834 Richwood Road
Florence, AL 35630
972-725-3157

Manuf. Product submitted as an "or equal"; G AE

Section 09510 Acoustical Ceiling
Armstrong World Industries, Inc., Ceiling & Ceiling Systems Div.:
Acoustical Units Product Line: Cortega, Color: White, Suspension Systems
Color: 24 mm Prelude Exsposed Tee, White;
P. O. Box 3001
Lancaster, PA 177-4
717-397-0611

Chicago Metallic Corporation: Acoustical Units Product Line: Suspension
Systems Color: 1200 Series Snap-Grid System,
4849 South Austin Avenue
Chicago, IL 60638
708-563-4600

USG Interiors, Inc.: Acoustical Units Product Line: to match Armstrong
World Industries Cortega and Prelude Lines.;
125 South Franklin
P. O. Box 4470
Chicago, IL 60608
800-874-4968

Manuf. Product submitted as an "or equal"; G AE

Section 09650 Resilient Flooring
Vinyl Composition Tile
Mannington Mills, Inc.: VCT-1 Product Line: Esentials, Color: #107 'Bisque', VCT-2 Product Line: Designer Essentials, Color: #288 'Brick', VCT-3 Product Line: Designer Essentials, Color: #205 'Forrest'VCT-4 to match Armstrong;
Mannington Mills Road
Salem, NJ 08079
609-935-3000

Armstrong World Industries, Inc., Commercial Flooring: VCT-4 Product Line: Static Dissaspative Tile, Color: 518950 "Marble Biege'.VCT-1, VCT-2 and VCT-3 to match Mannington Mills;
P. O. Box 3001
Lancaster, PA 17604
717-397-0611

Manuf. Product submitted as an "or equal"; G AE

Rubber Base
Marley Flexco: Color: To match Johnsonite;
East 6th Street
P. O. Box 553
Tuscumbia, AL 35674
256-383-7474

Roppe Corporation: Color: To match Johnsonite:
P. O. Box X
1602 North Union Street
Fostoria, OH 44830
800-537-9527

Johnsonite Inc.: Color: RB-1; #33 'Adobe Peach', RB-2; #11 'Canvas', RB-3; #132 'Expresso', RB_4 #86 'Hunter Green'.;
16910 Munn Road
Chargin Falls, OH 44122
800-899-8916

Manuf. Product submitted as an "or equal"; G AE

Rubber Tile
Marley Flexco: Color: To match Johnsonite:
East 6th Street
P. O. Box 553
Tuscumbia, AL 35674
256-383-7474

Roppe Corporation: Color: Tp match Johnsonite:
P. O. Box X
1602 North Union Street
Fostoria, OH 44830
800-537-9527

Johnsonite Inc.: Product Line and Color: RT-3; Sport-Max #713 'Sahara',

RT-4; Safety Stride #33 'Adobe Peach';
16910 Munn Road
Chargin Falls, OH 44122
800-899-8916

Manuf. Product submitted as an "or equal"; G AE

Rubber Stair Treads, Risers, and Stringers
Marley Flexco: Color: To match Johnsonite:
East 6th Street
P. O. Box 553
Tuscumbia, AL 35674
256-383-7474

Roppe Corporation: Color: To match Johnsonite:
P. O. Box X
1602 North Union Street
Fostoria, OH 44830
800-537-9527

Johnsonite Inc.: Color: #33 'Adobe Peach';
16910 Munn Road
Chargin Falls, OH 44122
800-899-8916

Manufacturer Product submitted as an "or equal"; G AE

Open Grid Rubber Tile Flooring
Turtle Plastics: Color: Turtle Tile Grey;
7450 A Industrial Parkway
Lorian, OH 44053
800-437-1603
www.turtleplastics.com

Accessories, Edge Strips
Johnsonite Inc.: Color: To match rubber tile floor;
16910 Munn Road
Chargin Falls, OH 44122
800-899-8916

Manuf. Product submitted as an "or equal"; G AE

Accessories, Transition Strips
Johnsonite Inc.: Color: To match adjacent rubber base;
16910 Munn Road
Chargin Falls, OH 44122
800-899-8916

Manuf. Product submitted as an "or equal"; G AE

Section 09680 Carpet

Mannington Commercial, Inc.: Product Line for CPT-1: Mannington
Commercial Basics 26 oz, Color: Tiburon;
PO Box 12281 (30703-7004)
1844 US Highway 41 S.E.
Calhoun, GA, 30721
800-241-2262

Mannington Commercial, Inc.: Product Line for CPT-2: Mannington Commercial Appointments, Color: #413A 'Russet';
PO Box 12281 (30703-7004)
1844 US Highway 41 S.E.
Calhoun, GA, 30721
800-241-2262

Mannington Commercial, Inc.: Product Line for CPT-3: Mannington Commercial Appointments, Color: #518A 'English Ivy';
PO Box 12281 (30703-7004)
1844 US Highway 41 S.E.
Calhoun, GA, 30721
800-241-2262

Manuf. Product submitted as an "or equal"; G AE

Section 10100 Visual Communication Specialties
Markerboard
Claridge Products and Equipment, Inc.: Product: LCS Writing System, Color: White;
Trim, Chalkrail, and Accessories Finish: Mill finish natural aluminum;
P. O. Box 910
601 Highway 62-65 South
Harrison, AR 72602
870-743-2200

Nelson Adams/GSI: Greensteel: Product: Dry Markerboard, Color: White;
Trim, Chalkrail, and Accessories Finish: Mill finish natural aluminum;
180 North Sherman Avenue
Cororna, CA 91720
909-340-2800

Carolina Chalkboard: Product: Vitrasteel Dry Markerboard, Color: White; FIO
Trim, Chalkrail, and Accessories Finish: Mill finish natural aluminum;
P. O. Box 137
110 North Upright Street
Landis, NC 28088
704-857-6102

Manuf. Product submitted as an "or equal"; G AE

Tackboards
Claridge Products and Equipment, Inc.: Cork Surface Color: Natural light brown cork; FIO
Trim, Chalkrail, and Accessories Finish: Mill finish natural aluminum;

P. O. Box 910
601 Highway 62-65 South
Harrison, AR 72602
870-743-2200

Nelson Adams/GSI: Greensteel: Cork Surface Color: Natural light brown cork;
Trim, Chalkrail, and Accessories Finish: Mill finish natural aluminum; IO
180 North Sherman Avenue

Cororna, CA 91720
909-340-2800

Carolina Chalkboard: Cork Surface Color: Natural light brown cork;
Trim, Chalkrail, and Accessories Finish: Mill finish natural aluminum;
P. O. Box 137
110 North Upright Street
Landis, NC 28088
704-857-6102

Manuf. Product submitted as an "or equal"; G AE

Map and display rail.
Claridge Products and Equipment, Inc.: No. 51 Map and Display RailCork
Surface Color: Natural light brown cork; FIO
Trim, Chalkrail, and Accessories Finish: Mill finish natural aluminum;
P. O. Box 910
601 Highway 62-65 South
Harrison, AR 72602
870-743-2200

Nelson Adams/GSI: Greensteel: Cork Surface Color: Natural light brown
cork; FIO
Trim, Chalkrail, and Accessories Finish: Mill finish natural aluminum;
180 North Sherman Avenue
Cororna, CA 91720
909-340-2800

Carolina Chalkboard: Cork Surface Color: Natural light brown cork;
Trim, Chalkrail, and Accessories Finish: Mill finish natural aluminum;
P. O. Box 137
110 North Upright Street
Landis, NC 28088
704-857-6102

Manuf. Product submitted as an "or equal"; G AE

Bullentin Boards.
Claridge Products and Equipment, Inc.: Product: No. 297 Color: Satin
anodized;
P. O. Box 910
601 Highway 62-65 South
Harrison, AR 72602
870-743-2200

Manuf. Product submitted as an "or equal"; G AE

Section 10106 Recessed Display Cases
Claridge Products and Equipment Inc.: Product: No. 300 Series Recessed
Case, Finish/Color: color Satin anodized finish, Fabric Color: No 1698
'Pearl'.;
P. O. Box 910
601 Highway 62-65 South
Harrison, AR 72602
870-743-2200

Nelson Adams/GSI: Greensteel: Product: NX Series Sliding Door Display
Case, Finish/Color: color: Satin anodized finish;
180 North Sherman Avenue

Cororna, CA 91720
909-340-2800

Lemco Inc.: Product: Model "TCR" Recessed Display Case, Finish/Color: C
olor: Satin anodized finish;
5970 West Dannon Way
West Jordan, UT 84088
801-280-4000

Manuf. Product submitted as an "or equal"; G AE

Santana, Product Inc.: Color: Topaz;
P.O. Box 2021
Scranton, PA. 18501
800-368-5002

Manuf. Product submitted as an "or equal"; G AE

Shower Benches
Santana, Product Inc.: Color: Topaz; FIO
P.O. Box 2021
Scranton, PA. 18501
800-368-5002

Manuf. Product submitted as an "or equal"; G AE

Section 10260 Wall and Corner Protection
Corner Guards
Construction Specialties, Inc.: Acrovyn Corner Guards Model: to match
Koroseal, Color Name/Number: to match Koroseal;
49 Meeker Avenue
Cranford, NJ 07016
908-272-5200

Koroseal Wall Protection Systems: G100 Series Corner Guards, Color #K22
'Light Peach'.
3875 Enbassy Parkway
Fairlawn, OH 44333
800-628-0449

Manuf. Product submitted as an "or equal"; G AE

Wall Guards (Bumper Guards)
Construction Specialties, Inc.: Acrovyn Bumper Guards Model: Model and
color to march Koroseal 'Light Peach';
49 Meeker Avenue
Cranford, NJ 07016
908-272-5200

Koroseal Wall Protection Systems: C400 Series Crash Rails, Color #K22
'Light Peach'.
3875 Enbassy Parkway
Fairlawn, OH 44333
800-628-0449

Manuf. Product submitted as an "or equal"; G AE

Section 10430 Exterior Signage
Dimensional Building Letters
ASI Sign Systems, Inc.: Colors/Finish: Polished cast bronze;
3890 West Northwest Hwy, Suite 102
The Plaza on Bachman Creek
Dallas, TX 75220
214-352-9140

Interface Architectural Signage: Colors/Finish: Polished cast bronze;
5320 Webb Parkway
Lilburn, Georgia 30247
770-921-5566

APCO Graphics: Colors/Finish: Polished cast bronze;
388 Grant Street S.E.
Atlanta, GA 30312
404-688-9000

Manuf. Product submitted as an "or equal"; G RE

Section 10508 Metal Wardrobe Lockers and Bench Seat
Metal Wardrobe Lockers
Penco Products, Inc.: Product/Model: Vanguard, Color: #708 'Swedish Red'
;
Oaks, PA 19456
610-666-0500

List Industries Inc.: Product/Model: Marquis Student Quiet KD, ;
PO Box 9601
401 N. W. 12th Avenue
Deerfield Beach, FL 33442
945-429-9155
800-776-1342
Fax: 945-428-3843
http://www.listindustries.com

Republic Storage Systems Co. Inc.: Product/Model: Quiet, ;
1038 Belden Avenue N.E.
Canton, Ohio 44705
800-447-1255

Manuf. Product submitted as an "or equal"; G AE

Section 10530 Miscellaneous Specialties
Mail Boxes
Auth-Florence Manuf.: Product/Model: [1 unit], [2 unit] 1500-74 with
1503 sized doors, Color: Anodized Bronze; FIO
591 Mitchell Road
Glendale Heights, IL 60139
630-545-1784

Section 10650 Operable Partitions

Modernfold Inc.: Product: #932, Color: to match Hufcor 'Off Whit'e;
1711 "I" Avenue
New Castle, IN 47362
765-529-1450

Hufcor Inc.: Product: 6000 Series, Color: #201 'Off White';
2101 Kennedy Road
P. O. Box 591
Janesville, WI 53547
608-756-1241

Holcomb & Hoke Mfg. Co. Inc.: Prduct 7000 Series, Color: To Match Hufcor 'Off White'; FIO
1545 Van Buren Street
Indianapolis, IN 46203
317-784-2444.

Manuf. Product submitted as an "or equal"; G AE

Section 11134 Projection Screens (Manually Operated)
Da-Lite Screen Co. Inc.: Model: "C", Color: Matte White;
P. O. Box 137
3100 North Detroit Street
Warsaw, IN 46581
219-267-8101
800-622-3737
Fax: 219-267-7804
Web Site: http://www.da-lite.com

Draper Inc.: Model: Luma 2 Screen, Color: Matte White;
P. O. Box 425
411 South Pearl
Spiceland, IN 47385
765-987-7999
800-238-7999
Fax: 765-987-7142
Web Site: http://www.draperinc.com

Stewart Filmscreen Corp.: Model: Ultramatte 200, Color: Matte White;
1161 West Sepulveda Blvd.
Torrance, CA 90502
310-784-5300
800-762-4999
Fax: 310-326-6870
Web Site: http://www.stewartfilm.com

Manuf. Product submitted as an "or equal"; G AE

PART 2 PRODUCTS

2.1 REFERENCE TO MANUFACTURER'S COLOR

Where color is shown as being specific to one manufacturer, an equivalent color by another manufacturer may be submitted for approval. Manufacturers and materials specified are not intended to limit the selection of equal colors from other manufacturers.

2.2 COLOR SCHEDULE

The color schedule lists the colors, patterns and textures required for exterior and interior finishes, including both factory applied and field applied colors.

2.2.1 Exterior Walls

Exterior wall colors shall apply to exterior wall surfaces including recesses at entrances and projecting vestibules. Conduit shall be painted to closely match the adjacent surface color. Wall color shall be provided to match the colors listed below.

a. Brick: Phoenix Brick Yard, (Brick-1) Grand Canyon Blend #46, Phoenix Brick Yard, (Brick-2); Grand Canyon Blend #20

b. Mortar: #35A 'Dark Brown' for Brick-1 and #10A 'Light Buff' for Brick-2 as manufactured by Solomon, P.O. Box 8288, Springfield, IL., ph. 800-624-8288 or equal.

c. Insulation and Finish System: Dryvitt, #471 'Biege', Texture; Sandblast.

d. Precast Concrete: Medium acid washed, medium sand texture with minimal course aggregate exposed, Colors: (Sill-1) to match Brick-1 and (Sill-2) to match Brick-2.

h. Glass and Glazing: Clear.

2.2.2 Exterior Trim

Exterior trim shall be provided to match the colors listed below.

a. Doors and Door Frames: PNT-4 Sherwin Williams SW1315 'Chutney Brown'..

b. Windows (mullion, muntin, sash, trim, and sill): Clear anodized.

c. Fascia: Hemlock Green to match roof.

d. Downspouts, Gutter, Louvers, and Flashings: 'Hemlock Green'.

e. Handrails: PNT-4 Sherwin Williams SW1315 'Chutney Brown'.

f. Caulking and Sealants: Color to match adjacent surfaces.

2.2.3 Exterior Roof

Roof color shall apply to exterior roof surfaces including sheet metal flashings and copings, mechanical units, roof trim, pipes, conduits, electrical appurtenances, and similar items. Roof color shall be provided to match the colors listed below.

a. Metal: AEP-SPAN, 'Hemlock Green'.

2.2.4 Interior Floor Finishes

Flooring materials shall be provided to match the colors listed below.

a. Carpet: Mannington Commercial; (CPT-1) Basic 'Tiburon', (CPT-2) Appointments #413A 'Russet', (CPT-3) Appointments #581A 'English Ivy'..

b. Vinyl Composition Tile: Mannington, (VCT-1) Essentials #107 'Bisque', (VCT-2) Designer Essentials, #288 'Brick', (VCT-3) Designer Essentials #205 'Forest'..

c. Raised Pattern Rubber Tile: (RT-2) Turtle Plastics, 'Turtle Tile Grey', (RT-3) Johnsonite Sport-Max Rubber Sports Floor Tile, #713 'Sahara' Hammered surface, (RT-4) Johnsonite Safety Stride Rubber Tile #33 'Adobe Peach'...

d. Stair Treads, Kick Strips, and Risers: (RT-1) Johnsonite #33 'Adobe Peach'..

e. Quarry Tile: Dal-Tile; (QT-1) #T02 'Redflash' .

f. Porcelain Tile: Crossville Ceramics, (CT_1) #VS12 'Roes Fresco, (CT_2) #A340 'Nectar', CT-3 #A634 'Terra Rosata'..

g. Grout: Mapei #15 Bone/Hueso at porcelean floor tile, Mapei #07 'Chocolate for quarry tile floors.

h. Static Dissipative Tile: Armstrong, #51950 'Marble Biege'.

i. Concrete: .

2.2.5 Interior Base Finishes

Base materials shall be provided to match the colors listed below.

a. Resilient Base and Edge Strips: Johnsonite, RB-1 '#33 'Peach', RB-2 #11 'Canvas', RB-3 #132 'Espresso'.

b. Porcelain Tile: Crossville Ceramics, CT_1 VS12 'Roes Fresco, CT_2 A340 'Nectar', CT-3 A634 'Terra Rosata'.

c. Prefaced Concrete Masonry Units: Trrenwyth Industries, Astra-Glaze 'SW Oatmeal.

2.2.6 Interior Wall Finishes

Interior wall color shall apply to the entire wall surface, including

reveals, vertical furred spaces, grilles, diffusers, electrical and access panels, and piping and conduit adjacent to wall surfaces unless otherwise specified. Items not specified in other paragraphs shall be painted to match adjacent wall surface. Wall materials shall be provided to match the colors listed below.

a. Ceramic Tile: Crossville Ceramics, CT_4 A238 'Shetland', polishd, CT_5 A340 'Nectar', Polished, A634 'Terra Rosata'..

b. Ceramic Tile Grout: Mapei #15 Bone/Hueso.

2.2.7 Interior Ceiling Finishes

Ceiling colors shall apply to ceiling surfaces including soffits, furred down areas, grilles, diffusers, registers, and access panels. Ceiling color shall also apply to joist, underside of roof deck, and conduit and piping where joists and deck are exposed and required to be painted. Ceiling materials shall be provided to match the colors listed below.

a. Acoustical Tile and Grid: Armstrong World Industries, Inc.; Color 'White'.

2.2.8 Interior Trim

Interior trim shall be provided to match the colors listed below.

a. Hollow Metal Doors and Frames: PNT-4 Sherwin Williams SW1315 'Chutney Brown'.

b. Wood Doors: AWI Section 1500, specification for System No. TR-6, Transparent, catalyzed polyurethane, premium quality, satin sheen.

c. Windows (mullion, muntin, sash, trim, and stool): Aluminum, Clear anodized.

d. Cultured Marble Window Sills: Central Marble Products, Inc.#951 Tender Gray on White" with suede finish .

e. Fire Extinguisher Cabinets: Exterior trim and door, Burnished aluminum; Cabinet Interior, 'White'.

f. Handrails: PNT-4 Sherwin Williams SW1315 'Chutney Brown'.

g. Metal Stairs: PNT-4 Sherwin Williams SW1315 'Chutney Brown'.

2.2.9 Interior Window Treatment

Window treatments shall be provided to match the colors listed below.

a. Horizontal Blinds: Hunter Douglas #269 'Chenille'.

2.2.10 Interior Miscellaneous

Miscellaneous items shall be provided to match the colors listed below.

a. Toilet Partitions and Urinal Screen: Santana Poly Granite HD $#533 'Topaz'.

b. Lockers: Penco Products #708 'Swedish Red'.

c. Operable Partitions: Hufcor 'Off White'.

d. Corner Guards: Korseal #K-22 'Light Peach'.

e. Shower Curtain: Opaque White.

PART 3 EXECUTION (Not Applicable)

-- End of Section --

SECTION 10100A

VISUAL COMMUNICATIONS SPECIALTIES
11/00

PART 1 GENERAL

1.1 REFERENCES

The publications listed below form a part of this specification to the extent referenced. The publications are referred to in the text by basic designation only.

AMERICAN NATIONAL STANDARDS INSTITUTE (ANSI)

ANSI Z97.1	(1984; R 1994) Performance Specifications and Methods of Testing for Safety Glazing Materials Used In Buildings

AMERICAN SOCIETY FOR TESTING AND MATERIALS (ASTM)

ASTM B 221M	(1996) Aluminum and Aluminum-Alloy Extruded Bars, Rods, Wire, Profiles, and Tubes (Metric)
ASTM C 1048	(1997b) Heat-Treated Flat Glass - Kind HS, Kind FT Coated and Uncoated Glass
ASTM F 152	(1995) Tension Testing of Nonmetallic Gasket Materials

1.2 GENERAL REQUIREMENTS

The term visual display board when used herein includes presentation boards, marker boards, tackboards, board cases, display track system and horizontal sliding units. Visual display boards shall be from manufacturer's standard product line.

1.3 SUBMITTALS

Government approval is required for submittals with a "G" designation; submittals not having a "G" designation are for information only. When used, a designation following the "G" designation identifies the office that will review the submittal for the Government. The following shall be submitted in accordance with Section 01330 SUBMITTAL PROCEDURES:

SD-03 Product Data

Markerboard;
Tack Board;
Bullentin Board;
Projection Screen

Manufacturer's descriptive data and catalog cuts. Manufacturer's installation instructions, and cleaning and maintenance instructions.

SD-04 Samples

Aluminum; G

Sections of frame, map rail, and chalktray, and two map hooks.

Porcelain Enamel; G

Section showing porcelain enamel coating, steel, core material and backing.

Materials; G .

Section of core material showing the lamination of colored cork, natural cork, woven fabric, non-woven fabric, and vinyl wall covering. Sample of hardwood and plastic laminate finish, and glass type. Samples shall be minimum 100 by 100 mm and show range of color.

07 Certificates

Markerboards;
Tackboards;
Bullentin Boards;

Certificate of compliance signed by Contractor attesting that visual display boards conform to the requirements specified.

1.4 DELIVERY, STORAGE AND HANDLING

Materials shall be delivered to the building site in the manufacturer's original unopened containers and shall be stored in a clean dry area with temperature maintained above10 degrees C . Materials shall be stacked according to manufacturer's recommendations. Visual display boards shall be allowed to acclimate to the building temperature for 24 hours prior to installation.

1.5 WARRANTY

Manufacturer's standard performance guarantees or warranties that extend beyond a one year period shall be provided.

PART 2 PRODUCTS

2.1 COLOR

Finish colors for required items shall be as specified in Section 09915 COLOR SCHEDULE.

2.2 MATERIALS

2.2.1 Porcelain Enamel

Marker board writing surface shall be composed of porcelain enamel fused to a nominal 0.378 mm (28 gauge) thick steel, laminated to a minimum 6 mm thick core material with a steel or foil backing sheet. Writing surface shall be capable of supporting paper by means of magnets. Marker board surface for display track system may be a powder paint dry

erase surface adhered to a nominal 1.214 mm (18 gauge) thick steel.

2.2.2 Cork

Cork shall be a continuous resilient sheet made from soft, clean, granulated cork relatively free from hardback and dust and bonded with a binder suitable for the purpose intended. The wearing surface shall be free from streaks, spots, cracks or other imperfections that would impair its usefulness or appearance. The material shall be seasoned, and a clean cut made not less than 13 mm from the edge shall show no evidence of soft sticky binder.

2.2.2.1 Natural Cork

Material shall be a single layer of pure grain natural cork without backing or facing. The color shall be light tan. The cork sheet shall have a tensile strength of not less than 275 kPa when tested in accordance with ASTM F 152.

2.2.3 Aluminum

Aluminum frame extrusions shall be alloy 6063-T5 or 6063-T6, conform to ASTM B 221M , and be a minimum 1.5 mm thick. Exposed aluminum shall have an anodized, satin finish. Straight, single lengths shall be used wherever possible. Joints shall be kept to a minimum. Corners shall be mitered and shall have a hairline closure.

2.2.4 Glass

Glass shall be comprised of tempered glass in accordance with ANSI Z97.1 and shall conform to ASTM C 1048, Kind FT (fully tempered), Condition A (uncoated), Type I, Class I (clear), thickness as specified.

2.3 MARKERBOARD

** Markerboard shall have a porcelain enamel writing surface and a chalktray. Markerboard shall be a factory assembled unit complete in one piece, without joints whenever possible. When markerboard dimensions require delivery in separate sections, components shall be prefit at the factory, disassembled for delivery and jointed at the site. Frame shall be aluminum. Chalktray shall be the same material as the frame and extend the full length of the liquid markerboard. The markerboard shall have a map rail as specified below with map hooks and a tackable insert shall extend the full length of the liquid chalkboard. Dry erase markings shall be removable with a felt eraser or dry cloth without ghosting. Each unit shall come complete with an eraser and four different color compatible dry erase markers. The size shall be as shown in the drawings. **

2.4 ** MAP RAILS

Map Rail shall have a tackable insert 50 mm wide and shall extend the full length of the rail, and shall have map hooks with clips for holding sheets of paper. Two map hooks shall be provided for each 1220 mm of map rail. **

2.5 TACKBOARDS

2.5.1 Cork

Tackboard shall consist of a minimum 6 mm thick natural cork laminated to a minimum 6 mm thick hardboard, and shall have an aluminum frame. The size shall be as shown in the drawings.

2.6 Bullentin Boards

Sliding Door Bullentin Board shall be composed of a fixed back panel, sliding tempered glass door panels, an 83 mm deep aluminum frame and track assembly and heavy-duty lock. Inside case depth shall be minimum 32 mm. Size shall be as indicated on the drawings.

2.7 PROJECTION SCREEN (PS-1)

Recessed mount motorized projection screen shall have 120V motor that is lubricated for life, quick reversal type, has overload protector, integral gears, and preset accessible limit switches. Recessed mount projection screens shall have an operable closure door and access panel. Screen shall be flame retardant, mildew resistant, and glass beaded. Bottom of screen fabric shall be weighted with metal rod. Roller shall be a rigid metal at least 75 in diameter mounted on sound absorbing supports. Motor will be end mounted design. Screen shall have a 3 position control switch to stop or reverse screen at any point. The switch shall be installed in a flush electrical box with cover plate, location(s) as shown on the electrical drawings. All conduit and wiring from the control switch to the projection screen shall be furnished and installed by the Contractor. Ceiling recessed case shall be extruded aluminum or wood with metal lined motor compartment. . Wood case shall be finished in light oak. Screen shall be UL listed. The size shall be as shown in the drawings.

PART 3 EXECUTION

3.1 INSTALLATION

Installation and assembly shall be in accordance with manufacturer's printed instructions. Concealed fasteners shall be used. Visual display boards shall be attached to the walls with suitable devices to anchor each unit. The Contractor shall furnish and install trim items, accessories and miscellaneous items in total, including but not limited to hardware, grounds, clips, backing materials, adhesives, brackets, and anchorages incidental to or necessary for a sound, secure, complete and finished installation. Installation shall not be initiated until completion of room painting and finishing operations. Visual display boards shall be installed in locations and at mounting heights indicated. Visual display boards shall be installed level and plumb, and if applicable doors shall be aligned and hardware shall be adjusted. Damaged units shall be repaired or replaced by the Contractor as directed by the Contracting Officer.

3.2 CLEANING

Writing surfaces shall be cleaned in accordance with manufacturer's instructions.

-- End of Section --

Architectural Door No.	Room Side Number	Sign Type	Message: Room Number Text Line [or Insert]	Remarks
101A	100	BB2	101 Mail Room [Text to be determined]	
102A	100	BB2	102 Retention Office [Text to be determined]	
103A	100	BB2	103 Elevator Equipment Room [- -]	
--------	100	C7	Elevator	
104A	100	BB2	104 Facility Manager [Text to be determined]	
105A	100	BB2	105 Community Outreach [Text to be determined]	
106A	150	BB2	106 [164th HHC Corps SPT GP] [Text to be determined]	
106AA	106	BB2	106A [164th HHC Corps SPT GP] [Text to be determined]	
106BA	106	BB2	106B [164th HHC Corps SPT GP] [Text to be determined]	
106CA	106	BB2	106C [164th HHC Corps SPT GP] [Text to be determined]	
106DA	106	BB2	106D [164th HHC Corps SPT GP] [Text to be determined]	
106EA	106	BB2	106E [164th HHC Corps SPT GP] [Text to be determined]	

Architectural Door No.	Room Side Number	Sign Type	Message: Room Number Text Line [or Insert]	Remarks
106FA	106	BB2	106F [164th HHC Corps SPT GP] [Text to be determined]	
106HA	106	BB2	106H [164th HHC Corps SPT GP] [Text to be determined]	
106JA	106	BB2	106J [164th HHC Corps SPT GP] [Text to be determined]	
106KA	106	BB2	106K [164th HHC Corps SPT GP] [Text to be determined]	
--------	106	(16) BB5	1 to 16 [Text to be determined]	Provide (16) signs to be mounted on Government-provided partitions.
107A	151	BB2	107 [164th HHC Corps SPT GP] [Text to be determined]	
108A	154	BB2	108 Admin Support [- -]	
108B	106	BB2	108 Admin Support [- -]	
109A	151	BB2	109 Network Operation Center [- -]	Mount sign on left sides of doors when looking from 151.
110A	154	BB2	110 Break Room [- -]	
110B	106	BB2	110 Break Room [- -]	
111A	154	BB2	111 Mechanical [- -]	
111B	Outside	--------	Mechanical	Provide 50mm-high painted

Architectural Door No.	Room Side Number	Sign Type	Message: Room Number Text Line [or Insert]	Remarks
				PNT-12 Helvetica Med. sign on door @ 1500mm above finished floor
A111AA	111	BB2	111A Electrical [- -]	
113B	154	BB2	113 Storage [- -]	
114A	155	BB2	114 [164th HHC Corps SPT GP] [Text to be determined]	
115A	153	BB2	115 Assembly Hall [- -]	
115AA	115	BB2	115A Chair Storage [- -]	
115BB	115	BB2	115B Scullery [- -]	
115BD	115	BB2	115C Kitchen [- -]	
115BE	Outside	--------	Kitchen	Provide 50mm-high painted PNT-12 Helvetica Med. sign on door @ 1500mm above finished floor
117A	115	BB2	115D Arms Vault [- -]	
116A	155	BB2	116 [164th HHC Corps SPT GP] [Text to be determined]	
118A	155	BB2	118 [164th HHC Corps SPT GP] [Text to be determined]	
119A	155	BB2	Women's Locker Room	

Architectural Door No.	Room Side Number	Sign Type	Message:	Room Number Text Line [or Insert]	Remarks

Architectural Door No.	Room Side Number	Sign Type	Message: Room Number Text Line [or Insert]	Remarks
120A	155	BB2	120 [164th HHC Corps SPT GP] [Text to be determined]	
121A	155	BB2A	Women	
122A	155	BB2	122 COMSEC Training [- -]	
113A	155	BB2A	Men	
124A	155	BB2	124 Learning Center [- -]	
125A	155	BB2	Men's Locker Room	
126A	155	BB2	126 Library [- -]	
128A	155	BB2	128 Physical Fitness	
151A	154	C6	Stair A	
152A	155	C6	Stair C	
--------	253	C7	Elevator	
200A	254	BB2	200 Medical Exam [- -]	
201A	254	BB2	201 [877th Postal Co.] [Text to be determined]	
202A	254	BB2	202 Medical Exam [- -]	
203A	250	BB2	203 Mechanical [- -]	

Architectural Door No.	Room Side Number	Sign Type	Message: Room Number Text Line [or Insert]	Remarks
203AA	203	BB2	203A Telephone [- -]	
203AB	203	BB2	203B Electrical [- -]	
204A	251	BB2	204 [6253 USAH] [Text to be determined]	
204B	253	BB2	204 [6253 USAH] [Text to be determined]	
204AA	204	BB2	204A [6253 USAH] [Text to be determined]	
204AB	204	BB2	204B [6253 USAH] [Text to be determined]	
204AC	204	BB2	204C [6253 USAH] [Text to be determined]	
204AD	204	BB2	204D [6253 USAH] [Text to be determined]	
204AE	204	BB2	204E [6253 USAH] [Text to be determined]	
204AF	204	BB2	204F [6253 USAH] [Text to be determined]	
204AG	204	BB2	204G [6253 USAH] [Text to be determined]	
204AH	204	BB2	204H [6253 USAH] [Text to be determined]	
204AJ	204	BB2	204J	

Architectural Door No.	Room Side Number	Sign Type	Message: Room Number Text Line [or Insert]	Remarks
			[6253 USAH] [Text to be determined]	
204AK	204	BB2	204K [6253 USAH] [Text to be determined]	
204AL	204	BB2	204L [6253 USAH] [Text to be determined]	
204AM	204	BB2	204M [6253 USAH] [Text to be determined]	
204AN	204	BB2	204N [6253 USAH] [Text to be determined]	
--------	204	(8) BB5	1 to 8 [Text to be determined]	Provide (8) signs to be mounted on Government-provided partitions.
205A	255	BB2	205 Janitor [- -]	
206A	255	BB2	206 Admin Support [- -]	
206B	255	BB2	206 Admin Support [- -]	
207A	255	BB2	207 Classroom [- -]	
209A	255	BB2	209 Classroom [- -]	
211A	255	BB2	211 Classroom [- -]	
213A	255	BB2	213 Classroom	

Architectural Door No.	Room Side Number	Sign Type	Message: Room Number Text Line [or Insert]	Remarks
			[- -]	
213A	255	BB2	213A Classroom [- -]	
214A	256	BB2	214 [751st QM CO] [Text to be determined]	
215A	256	BB2	215 [363 AUG BN] [Team Room]	
216A	256	BB2	216 [751st QM CO] [Text to be determined]	
217A	256	BB2	217 [363 AUG BN] [Team Room]	
218A	256	BB2	218 Classroom [Text to be determined]	
219A	256	BB2	219 [363 AUG BN] [Team Room]	
220A	256	BB2	220 [363 AUG BN] [Text to be determined]	
221A	256	BB2A	Women	
222A	256	BB2	222 [877th Postal Co.] [363 AUG BN] [Text to be determined]	
222B	256	BB2	222 [877th Postal Co.] [363 AUG BN] [Text to be determined]	
--------	222	(18) BB5	1 to 18 [Text to be determined]	Provide (18) signs to be mounted on Government-provided partitions.

Architectural Door No.	Room Side Number	Sign Type	Message: Room Number Text Line [or Insert]	Remarks
222AA	222	BB2	222A [877th Postal Co.] [Text to be determined]	
222BA	222	BB2	222B [877th Postal Co.] [Text to be determined]	
222CA	222	BB2	222C [877th Postal Co.] [Text to be determined]	
222DA	222	BB2	222D [751st QM CO] [Text to be determined]	
222EA	222	BB2	222E [751st QM CO] [Text to be determined]	
--------	222	BB2	222F Admin Support [- -]	Mount sign next to opening leading into Admin Support, not next to Door 222FA.
222GA	222	BB2	222G [363 AUG BN] [Text to be determined]	
222HA	222	BB2	222H [363 AUG BN] [Text to be determined]	
222JA	222	BB2	222J [363 AUG BN] [Text to be determined]	
222KA	222	BB2	222K [356 AUG BN] [Text to be determined]	
222LA	222	BB2	222L [356 AUG BN] [Text to be determined]	
222MA	222	BB2	222M [363 AUG BN] [Text to be determined]	

Architectural Door No.	Room Side Number	Sign Type	Message: Room Number Text Line [or Insert]	Remarks
222NA	222	BB2	222N [363 AUG BN] [Text to be determined]	
222PA	222	BB2	222P [363 AUG BN] [Text to be determined]	
223A	256	BB2A	Men	
225A	256	BB2	225 [363 AUG BN] [Team Room]	
227A	256	BB2	227 [363 AUG BN] [Text to be determined]	
250A	255	C6	Stair A	
252A	256	C6	Stair C	

Architectural Door No.	Room Side Number	Sign Type	Message: Room Number Text Line [or Insert]	Remarks
101A	101	BB2	101A [877th Postal Co.] [Text to be determined]	
101B	101	BB2	101B [164th HHC Corps Spt Gp [Text to be determined]	
101C	101	BB2	101C [751stQM Co.] [Text to be determined]	
101D	101	BB2	101D [363 Aug Bn] [Text to be determined]	
101F	102	BB2	101F Office [Text to be determined]	
103A	Outside	--------	Mechanical	Provide 50mm-high painted PNT-12 Helvetica Med. sign on door @ 1500mm above finished floor
104A	102	BB2A	Women	
105A	102	BB2A	Men	
106A	Outside	--------	Tool Room	Provide 50mm-high painted PNT-12 Helvetica Med. sign on door @ 1500mm above finished floor
106B	106	BB2	106 Tool Room	
--	106	BB5	1 to 4 [Text to be determined] [Text to be determined]	Provide (4) sequentially numbered signs to be mounted on inside of each storage cage
107A	Outside	--------	Flammable Storage	Provide 50mm-high painted PNT-12 Helvetica Med. sign on door @ 1500mm above finished floor
108A	106	BB2	108 Battery	
109A	Outside	--------	Telephone	Provide 50mm-high painted PNT-12 Helvetica Med. sign on door @ 1500mm above finished

Architectural Door No.	Room Side Number	Sign Type	Message: Room Number Text Line [or Insert]	Remarks
				floor
110A	Outside	--------	Elec/Comm Repair	Provide 50mm-high painted PNT-12 Helvetica Med. sign on door @ 1500mm above finished floor
110B	102	BB2	110 Elec/Comm Repair	

Unit Storage Building

Architectural Door No.	Room Side Number	Sign Type	Message: Room Number Text Line [or Insert]	Remarks
101A	100	BB2	101 [3/356] [Text to be determined]	
102A	100	BB2	102 [877th Postal Co.] [Text to be determined]	
103A	100	BB2	103 [363 Aug Bn] [Text to be determined]	
104A	100	BB2	104 [751st QM Co.] [Text to be determined]	
105A	100	BB2	105 [6253 USAH] [Text to be determined]	
106A	100	BB2	106 [164th HHC Corps Spt Gp] [Text to be determined]	
107A	100	BB2A	MEN	
108A	100	BB2A	WOMEN	
108B	106	BB2	108 Admin Support	
109A	100	BB2	109 Janitor	
110A	100	BB2	110 Mechanical	
110B	Outside	--------	Mechanical	Provide 50mm-high painted PNT-12 Helvetica Med. sign on door @ 1500mm above finished floor
111A	100	BB2	111 Electrical	
A112A	113	BB2	112 Telephone	
--	113	(62)BB5	1 to 62 Storage	Provide (62) sequentially numbered signs to be mounted

Architectural Door No.	Room Side Number	Sign Type	Message:	Room Number Text Line [or Insert]	Remarks
			[Text to be determined]		on inside of each storage cage

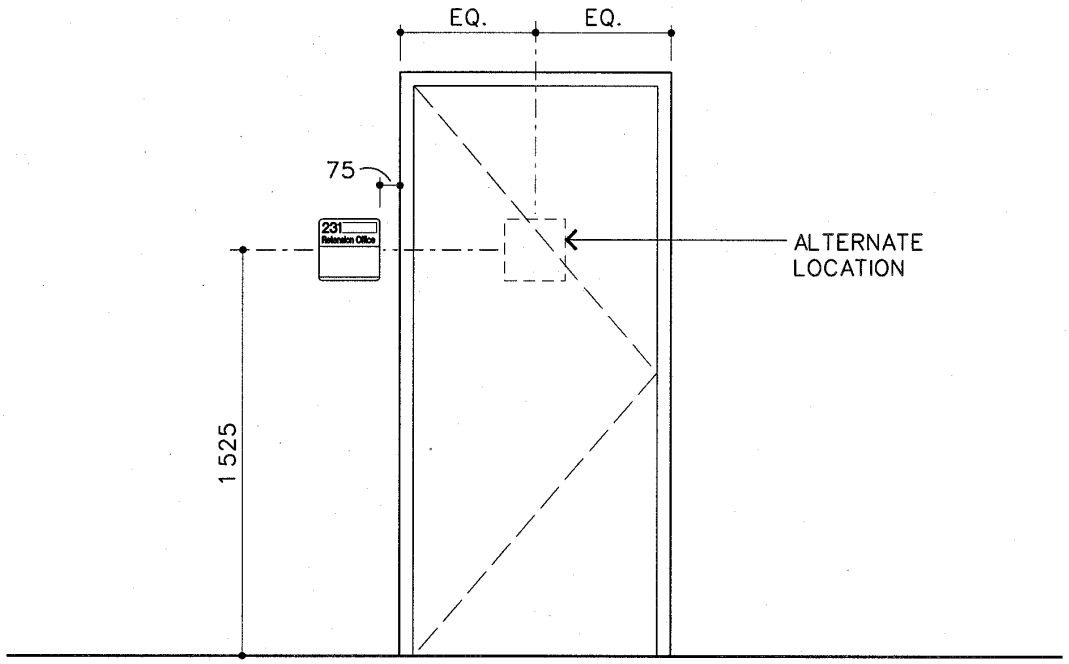

INTERIOR PLAQUE SIGN LOCATION

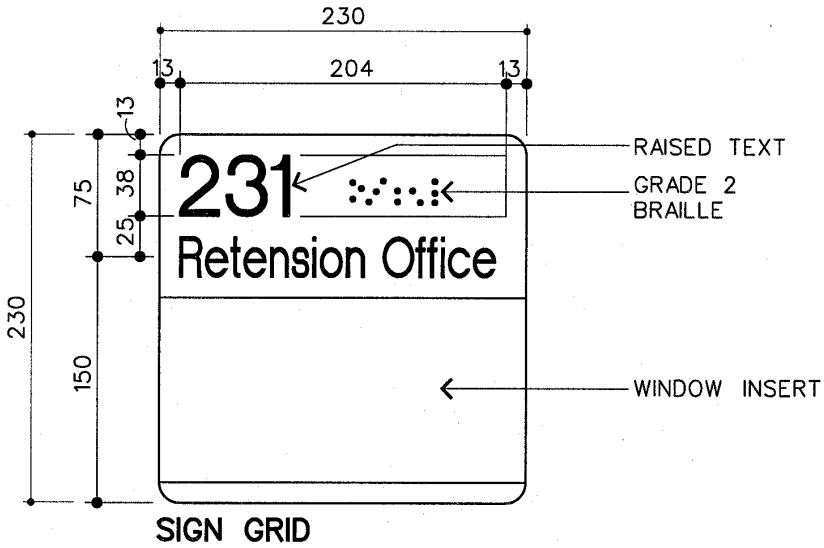

INTERIOR SIGN TYPE BB2-OFFICE

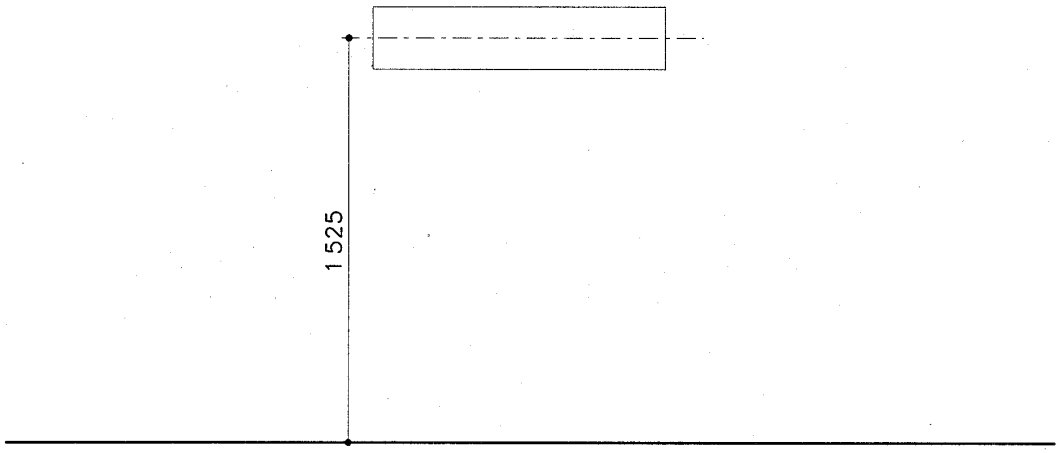

INTERIOR SIGN LOCATION

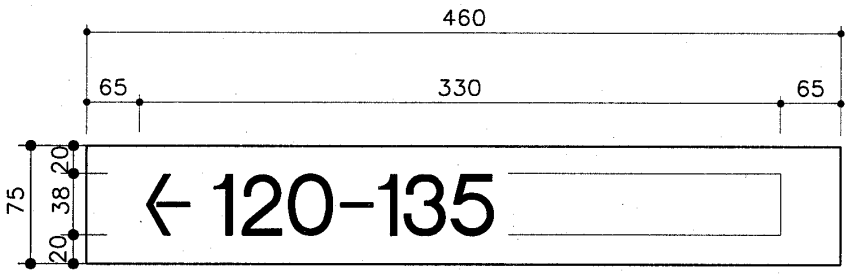

INTERIOR SIGN TYPE AA5 - WALL MOUNTED GUIDE SIGN GRID

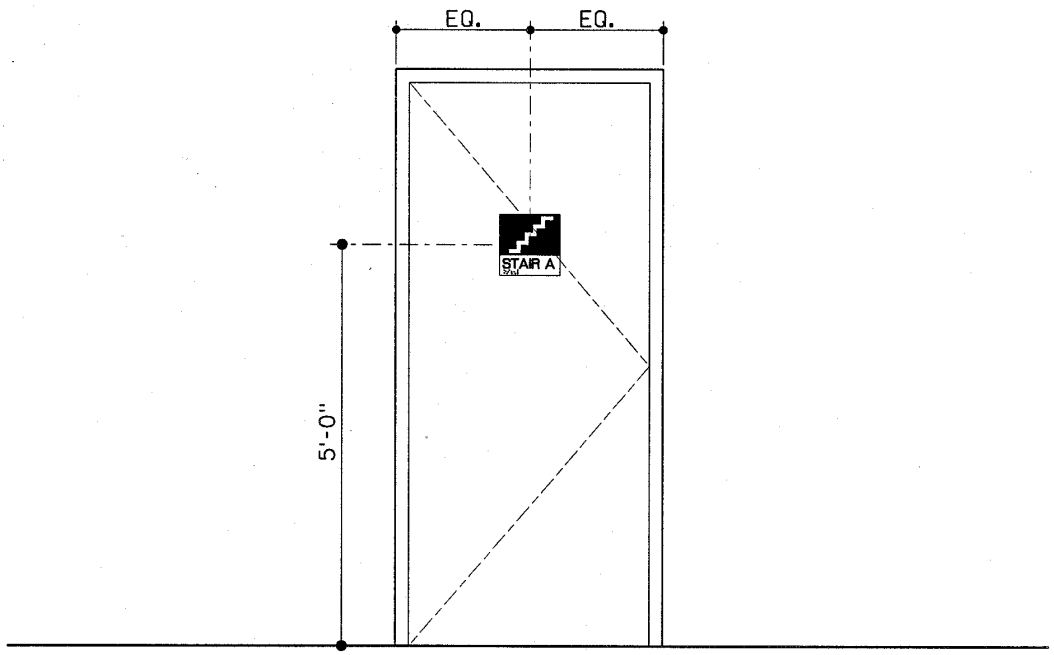

INTERIOR SIGN LOCATION (N.T.S.)

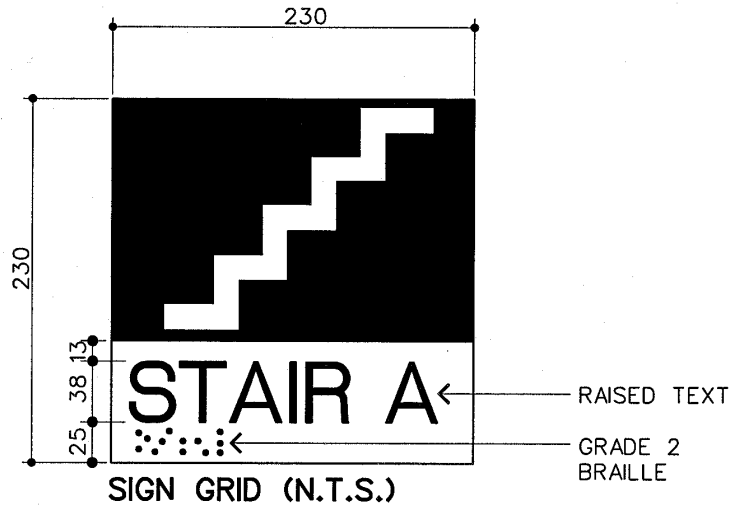

SIGN GRID (N.T.S.)

INTERIOR SIGN TYPE C6-STAIR

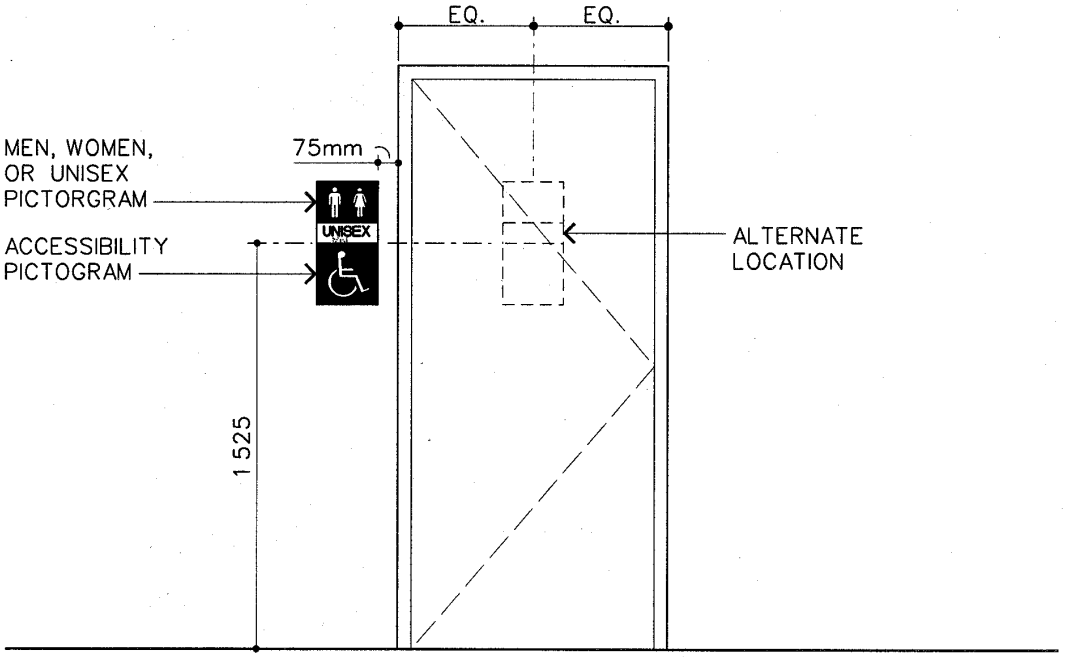

INTERIOR SIGN LOCATION

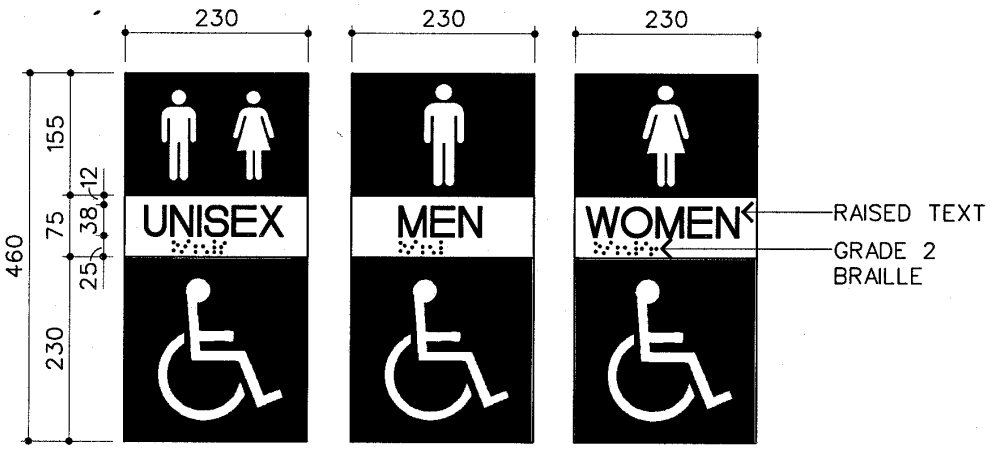

SIGN GRID

INTERIOR SIGN TYPE BB2A-RESTROOMS

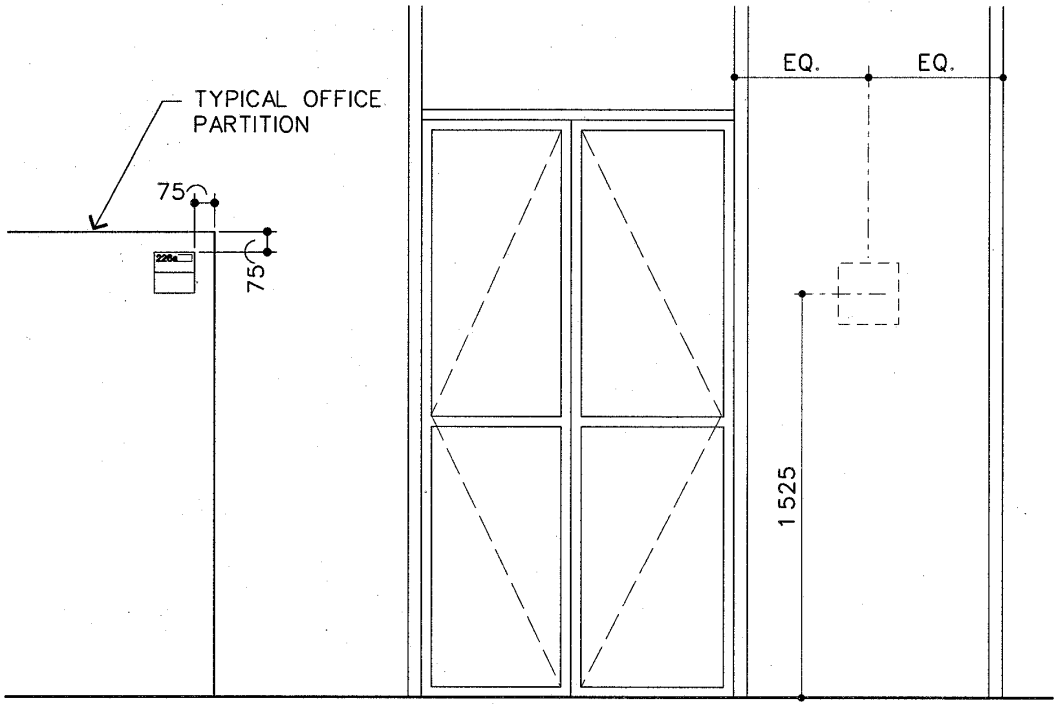

WORK STATION
SIGN LOCATION (N.T.S.)

STORAGE UNIT
SIGN LOCATION (N.T.S.)

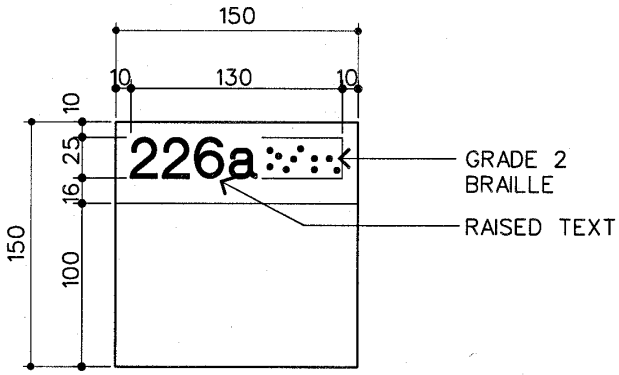

SIGN GRID (N.T.S.)

INTERIOR SIGN TYPE BB5-PARTITIONED OFFICE

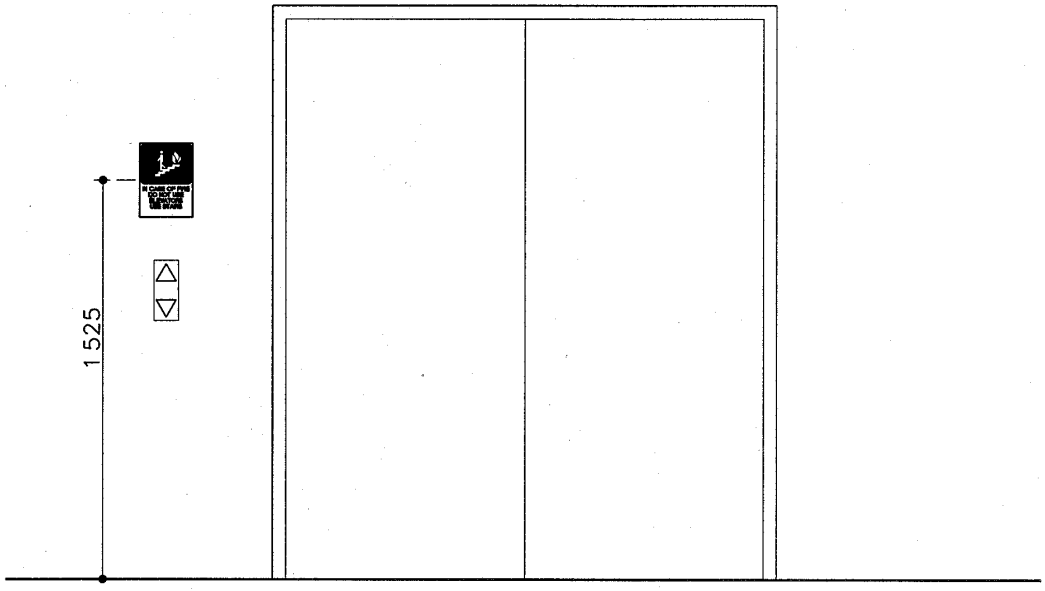

INTERIOR SIGN LOCATION (N.T.S.)

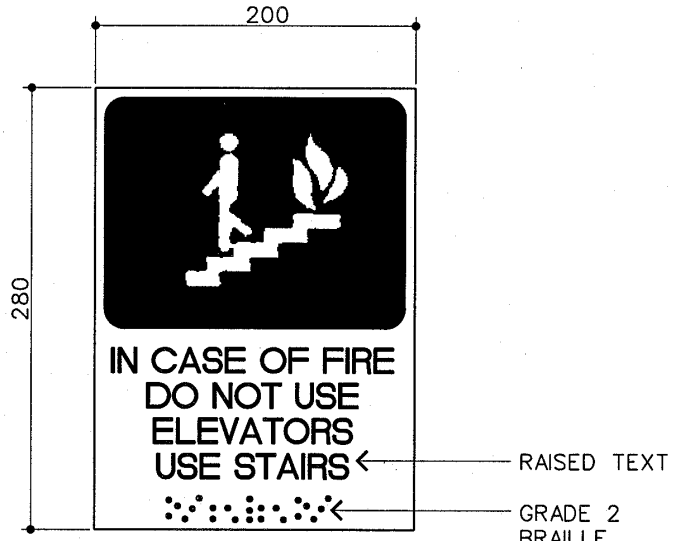

SIGN GRID (N.T.S.)

INTERIOR SIGN TYPE C7-ELEVATOR

SECTION 10530R

MISCELLANEOUS SPECIALTIES (PARTIAL OMAR FUNDED)
06/01

PART 1 GENERAL

1.1 SUBMITTALS

Government approval is required for submittals with a "G" designation; submittals not having a "G" designation are for information only. When used, a designation following the "G" designation identifies the office that will review the submittal for the Government. The following shall be submitted in accordance with Section 01330 SUBMITTAL PROCEDURES:

SD-03 Product Data

Product certification and installation recommendation data.

Acceptable Manufacturer Products;

Manufacturers products listed in this specification are referenced to establish a standard of quality. When the specific product listed is submitted by the Contractor, that submittal will be considered For Information Only. When an equal to that named in this specification or Section 09915 is submitted, it shall be for Government Approval (G). The following manufacturer products are specifically mentioned in this specification:

Mail Box Manuf. Product submitted as an "or equal"; G

Security Mesh:

Woven Wire Products Association Member
www.wovenwire.org

Security Mesh Manuf. Product submitted as an "or equal"; G

Provide data describing security mesh installation and recommendations.

Mooring Eye Floor Casting: Neenah Foundry Co. No. R-3490-F.;
Box 729
Neenah,WI 54957 414-725-7000

Mooring Eye Manuf. Product submitted as an "or equal"; G

Trash and Ash;
Hat and Coat Racks;
Recycling Center;
Literature Racks and Universal Racks;
Recycling Bin;
Open Work Bench;
Battery Rack;
Adjustable TV Wall Mount Bracket

Roll-up Floor Mats (MT-1)

Products submitted as an "or equal"; G

SD-02 Shop Drawings

Mail Boxes; G

Security Mesh; G

Mooring Eye Floor Casting; G

Drawings showing construction and installation details.

SD-04 Samples

Color Charts; G

Submit color chart for mailbox, Trash and Ash, Recycling Center, Literature Racks and Universal Racks.

1.2 DELIVERY AND STORAGE

All items shall be delivered to the project site in manufacturer's undamaged containers.

1.3 WARRANTY

Provide manufacturer's standard warranty for the items.

PART 2 PRODUCTS

2.1 PROPRIETARY PRODUCT NAMES

Manufacturers names, model numbers, and colors are given to clarify the designers intent and are not intended to limit selection of similar products from acceptable manufacturers

2.2 MAILBOXES

2.2.1 General

Mailboxes shall be U.S. Postal Service approved. Mailboxes, materials, sizes, construction, and installation shall comply with U.S. Postal Service regulations and shall be fully approved by the U.S. Postal Service.

2.2.2 Materials

Quantities and arrangement of mail boxes shall be as indicated on the drawings. Mailboxes shall be rear-loading type with sheet aluminum rear door with a continuous piano hinge on one side and a keyed lock on the other side strengthened with formed sheet aluminum stiffeners. Framework supporting compartment doors shall be fabricated from high strength extruded aluminum alloy. Compartment doors shall be fabricated from high strength extruded aluminum alloy, with a minimum of 3.2 mm thickness, and swing on concealed hinge pins. The compartment door shall be double wide to accept minimum 225mm x 280mm size mail without bending. When closed, the door shall interlock with frame member along

hinge side and shall be precision fitted to preclude prying. Doors shall be reinforced vertically along both sides and near center with integral ribs. Locks on individual compartment doors shall be springlatch type lock actuated by a cam type lock with two change keys per lock and a minimum of 1000 available key changes. All locks within project shall be keyed differently. Compartment construction shall be double-walled high strength sheet aluminum alloy with vertical stiffeners of formed aluminum. Finish shall be as indicated on the drawings. Mail box manufacturer shall furnish aluminum channel type card holders with pressure sensitive backing to accommodate 11.1 mm by 63.5 mm cards for individual and/or unit names.

Mail collection basket shall be manufacturer's standard.

2.3 SECURITY MESH

Security mesh shall be a minimum of 1.8mm thick and weigh a minimum of 3.66kg/sq. m. The mesh shall be diamond type with a minimum of 73 percent open area. The overall mesh size and orientation shall be as recommended by the manufacturer.

2.4 MOORING EYE

Mooring eye shall be a standard casting product constructed of ductile iron and made to be installed in concrete with top of casting flush with top of finish concrete.

2.5 TRASH AND ASH (OMAR FUNDED)

Freestanding trash receptacle and metal trash bucket flap top, 254 mm diameter by 711 mm high. Color 'Evergreen' as selected from manufacturer's standard colors to match Peter Pepper Products, Inc., Model 238 or equal.

2.6 HAT AND COAT RACKS

Wall mounted two prong polished aluminum coat hooks, Model 2077 AL as manufactured by Peter Pepper Products, Inc.,or equal.

2.7 RECYCLING CENTER (OMAR FUNDED)

Freestanding fiberglass recycling center for glass, cans, paper, plastic, and trash, one-piece lift off top and individual standard size fiberglass liners and recycling decal labels. 1219 mm wide by 406 mm deep by 813 mm long. Color 'Evergreen' as selected from manufacturer's standard colors to match Peter Pepper Products, Inc., Model 1039 G or equal.

LABEL and OPENING SIZE;

Cans	100 mm diameter
Bottles	140 mm diameter
Waste	225 mm diameter
paper	38 x 300 mm slot

2.8 LITERATURE RACKS AND UNIVERSAL RACKS (OMAR FUNDED)

Wall mounted literature rack; 711 x 300 x 100 mm deep, single pocket

with 4 adjustable magnetic dividers, liftable acrylic front panels, and manufacturer's standard back and side panels. Color equal to Peter Pepper Products, Inc. colors: Side panels; 'Evergreen' and back panels and dividers 'Soft White'. Model No. 487 P as manufactured by Peter Pepper Products, Inc. or equal.

2.9 RECYCLING BIN (OMAR FUNDED)

Trash container shall be molded rubber with hinged lid, 227 L capacity, 2 heavy duty wheels for mobility, approximately 550 x 670 x 925 mm high as manufactured by Rubbermaid or equal. Color 'grey'.

2.10 OPEN WORK BENCH (OMAR FUNDED)

Penco Products or equal open work bench, 1800 85 mm adjustable height unit from 750 to 900 mm with laminated hardwood top (#30567). Provide back and end stops (#30988); riser with electrical strip (#30967 & 09372); case and drawer 552 mm wide (#30962), 1800 mm shelf and stringer (#31120H & 31137H). standard finish for all steel parts, #028 'Grey' baked enamel.

2.11 BATTERY RACK

Battery rack shall be as manufactured by Aicken Strut A Subsidiary of Robroy Industries, River Road, Verona, PA 15147, Ph. 800-426-4293. Unistrut Corporation, 35660 Clinton Street, Wayne. Michigan 48184, Ph. 800-937-8788, or equal

Channel framing shall be 1500 Series, 38 mm standard duty Aicken Strut, polyester type.

Shelf units shall be fiberglass reinforced polyester grating with 67 percent open area with nominal square mesh pattern at 38 x 38 x 38 mm thick. All fasteners shall be constructed of reinforced polyurethane.

2.12 ADJUSTABLE TV WALL MOUNT BRACKET

TV bracket shall be heavy duty, wall mount, with adjustable platform. Platform width shall be adjustable to a 675 mm (27 inch) TV, minimum 500 - 750 mm wide by 325 mm deep, maximum projection 675 mm, minimum load capacity shall be 68 kg. Platform shall be able to swivel 360 degrees and tilt a minimum 7 degrees. Hardware shall be as required for mounting to either masonry or metal stud drywalls (either single or double stud). Finish shall be manufacturers standard Black. Adjustable TV wall mount bracket shall be Model DSWP2030 as manufactured by Lucasey Mounting Systems, 2744 East Eleventh Street, Oakland, CA 94614, ph; 800-582-2739 or equal.

*2.13 ** RECESSED FLOOR MATS (MAT-1)*

Roll-up mats shall be recessed of thermal plastic construction with carpet surface. Roll-up mats shall be for use in recessed area. Construction details of recessed areas shall be shown on the drawings.

*Roll-up mat shall be equal to Milliken First Appearance, Brush-Off Barrier Free; Color: #121 'Driftwood' as manufactured by Milliken & Company, 201 Lukken Ind. Dr. West, Lagrange, GA 30240, ph; 888-645-6239 or equal. **

PART 3 EXECUTION

3.1 INSTALLATION

Install all items in strict accordance with manufacturer's recommendations at the locations indicated on the drawings. Align and plumb all items with adjacent surfaces and set accurately in location.

*3.2 ** RECESSED FLOOR MATS*

*Contractor shall verify field measurements prior to releasing materials for fabrication by the manufacturer. A mat frame shall be used to ensure recess accuracy in size, shape and depth. Drain pit shall be formed by blocking out concrete when frames are installed. Pit shall be dampproofed after concrete has set. Frames shall be assembled onsite and installed so that upper edge will be level with finished floor surface. A cement base shall be screeded inside the mat recess frame area using the edge provided by the frame as a guide. The frame shall be anchored into the cement with anchor pins a minimum of 610 mm on centers. **

3.3 PROTECTION AND CLEANING

Protect the work from other trades and remove all protective wrappings when appropriate. Clean all surfaces in accordance with manufacturer's recommendations.

---End of Section--- -- End of Section --

SECTION 13121A

METAL BUILDING SYSTEMS (MINOR REQUIREMENTS)
10/01

PART 1 GENERAL

1.1 REFERENCES

The publications listed below form a part of this specification to the extent referenced. The publications are referred to in the text by basic designation only.

ALUMINUM ASSOCIATION (AA)

AA Design Manual	(2000) Aluminum Design Manual: Specification & Guidelines for Aluminum Structures

AMERICAN ARCHITECTURAL MANUFACTURERS ASSOCIATION (AAMA)

AMERICAN INSTITUTE OF STEEL CONSTRUCTION (AISC)

AISC ASD Manual	(1989) Manual of Steel Construction Allowable Stress Design
AISC Pub No. S342 L	(1993) Load and Resistance Factor Design Specification for Structural Steel Buildings

AMERICAN IRON AND STEEL INSTITUTE (AISI)

AMERICAN SOCIETY FOR TESTING AND MATERIALS (ASTM)

ASTM A 36/A 36M	(2000) Carbon Structural Steel
ASTM A 53/A 53M	(1999b) Pipe, Steel, Black and Hot-Dipped, Zinc-Coated, Welded and Seamless
ASTM A 252	(1998) Welded and Seamless Steel Pipe Piles
ASTM A 463/A 463M	(2000) Steel Sheet, Aluminum-Coated, by the Hot-Dip Process
ASTM A 500	(1999) Cold-Formed Welded and Seamless Carbon Steel Structural Tubing in Rounds and Shapes
ASTM A 501	(1999) Hot-Formed Welded and Seamless Carbon Steel Structural Tubing

ASTM A 529/A 529M	(2000) High-Strength Carbon-Manganese Steel of Structural Quality
ASTM A 570/A 570M	(1998) Steel, Sheet and Strip, Carbon, Hot-Rolled, Structural Quality
ASTM A 572/A 572M	(2000) High-Strength Low-Alloy Columbium-Vanadium Structural Steel
ASTM A 588/A 588M	(2000) High-Strength Low-Alloy Structural Steel with 50 ksi (345 MPa) Minimum Yield Point to 4 in. (100 mm) Thick
ASTM A 606	(1998) Steel, Sheet and Strip, High-Strength, Low-Alloy, Hot-Rolled and Cold-Rolled, with Improved Atmospheric Corrosion Resistance
ASTM A 607	(1998) Steel, Sheet and Strip, High-Strength, Low-Alloy, Columbium or Vanadium, or Both, Hot-Rolled and Cold-Rolled
ASTM A 618	(1999) Hot-Formed Welded and Seamless High-Strength Low-Alloy Structural Tubing
ASTM A 653/A 653M	(2000) Steel Sheet, Zinc-Coated (Galvanized) or Zinc-Iron Alloy-Coated (Galvannealed) by the Hot-Dip Process
ASTM A 792/A 792M	(1999) Steel Sheet, 55% Aluminum-Zinc Alloy-Coated by the Hot-Dip Process
ASTM B 209M	(2000) Aluminum and Aluminum-Alloy Sheet and Plate (Metric)
ASTM B 221M	(2000) Aluminum and Aluminum-Alloy Extruded Bars, Rods, Wire, Profiles, and Tubes (Metric)
ASTM B 241/B 241M	(2000) Aluminum and Aluminum-Alloy Seamless Pipe and Seamless Extruded Tube
ASTM B 308/B 308M	(2000) Aluminum-Alloy 6061-T6 Standard Structural Profiles
ASTM B 429	(2000) Aluminum-Alloy Extruded Structural Pipe and Tube
ASTM C 518	(1998) Steady-State Heat Flux Measurements and Thermal Transmission Properties by Means of the Heat Flow Meter Apparatus
ASTM C 578	(1995) Rigid, Cellular Polystyrene Thermal Insulation
ASTM C 612	(2000) Mineral Fiber Block and Board

Thermal Insulation

ASTM C 991	(1998) Flexible Glass Fiber Insulation for Pre-Engineered Metal Buildings
ASTM C 1289	(1998) Faced Rigid Cellular Polyisocyanurate Thermal Insulation Board
ASTM D 2244	(1995) Calculation of Color Differences from Instrumentally Measured Color Coordinates
ASTM D 4214	(1998) Evaluating Degree of Chalking of Exterior Paint Films
ASTM D 4397	(1996) Polyethylene Sheeting for Construction, Industrial, and Agricultural Applications
ASTM E 84	(2000a) Surface Burning Characteristics of Building Materials
ASTM E 96	(2000) Water Vapor Transmission of Materials

AMERICAN WELDING SOCIETY (AWS)

AWS D1.1	(2000) Structural Welding Code - Steel

U.S. ARMY CORPS OF ENGINEERS (USACE)

TI 809-04	(1998) Seismic Design for Buildings
TI 809-07	(1998) Design of Cold-Formed Load Bearing Steel Systems and Masonry Veneer/Steel Stud Walls

INTERNATIONAL CONFERENCE OF BUILDING OFFICIALS (ICBO)

MATERIAL HANDLING INSTITUTE (MHI)

METAL BUILDING MANUFACTURERS ASSOCIATION (MBMA)

MBMA Low Rise Manual	(1996) Low Rise Building Systems Manual

SHEET METAL & AIR CONDITIONING CONTRACTORS' NATIONAL ASSOCIATION (SMACNA)

SMACNA Arch. Manual	(1993; Errata; Addenda Oct 1997) Architectural Sheet Metal Manual

UNDERWRITERS LABORATORIES (UL)

UL 580	(1994; Rev thru Feb 1998) Tests for Uplift Resistance of Roof Assemblies

1.2 SUBMITTALS

Government approval is required for submittals with a "G" designation; submittals not having a "G" designation are for information only. When used, a designation following the "G" designation identifies the office that will review the submittal for the Government. The following shall be submitted in accordance with Section 01330 SUBMITTAL PROCEDURES:

SD-02 Shop Drawings

Drawings;

Detail drawings consisting of catalog cuts, design and erection drawings containing an isometric view of the roof showing the design wind uplift pressures and dimensions of edge and corner zones; shop painting and finishing specifications, instruction manuals, manufacturer's recommended erection methods and procedures and other data as necessary to clearly describe design, material, sizes, layouts, construction details, fasteners, and erection. Manufacturer's recommended erection methods and procedures shall describe the basic sequence of assembly, temporary bracing, shoring, and related information necessary for erection of the metal building including its structural framework and components. A brief list of locations where buildings of similar design have been used shall be included with the detail drawings and shall include information regarding date of installation, name and address of woner, and how the structure is used.

Design Analysis shall be submitted as one package with the detail drawings 40 days prior to beginning of manufacture. The building related design analysis signed by a Registered Professional Engineer shall include a list of the design loads, and complete calculations for the building, its components, and the foundations. Formulas and references shall be identified. Assumptions and conclusions shall be explained, and cross-referencing shall be clear. The design analysis shall include, but not be limited to the following wind and seismic information:

1. Wind forces on various parts of the structures. Separate calculations shall be performed showing wind forces on various parts of the roof. Both positive and negative pressures shall be calculated with the controlling pressure summarized.

2. Lateral forces due to seismic loading.

3. Portions of the building for which design was controlled by seismic or wind forces shall be noted.

4. Thermal movements that will result from the specified temperature range. The calculations shall be accompanied by details from the manufacturer that demonstrate how installed concealed anchor clips and other roof system devices will accomodate the required thermal movement.

5. A complete foundation structural design that includes design loads, complete calculations for the building, and special

concentrated and component loads. Assumptions and conclusions shall be explained and cross-referenced clearly. Building foundation design and calculations shall be fully coordinated with all aspects of the buidling design analysis and shall be signed by a Registered Professional Engineer.

Computer programmed designs shall be accompanied by stress values and a letter of certification, signed by a Registered Professional Engineer, stating the design criteria and procedures used and attesting to the adequacy and accuracy of the design. A narrative of the computer program delineating the basic methodology shall be included in the submittal. The program output shall be annoted and supplemented with sketches to make it easier for an engineer unfamiliar with the program to verify the input and output. Critical load conditions used in the final sizing of the members shall be emphasized. The design analysis shall include the name and office phone number of the designer and checker who function as a point of contact to answer questions during the detail-drawing review.

SD-03 Product Data

Manufacturer's Instructions;

Manufacturer's literature for individual building component systems.

Qualifications;

Qualifications of the manufacturer, and qualifications and experience of the building erector. A brief list of locations where buildings of similar design have been used shall be included with the detail drawings and shall also include information regarding date of completion, name and address of owner, and how the structure is used. Qualifications of the manufacturer, qualification of the manufacturer's representative who will provide job site assistance, copy of the current AISC Quality Certificate showing certification in category MB and qualifications and experience of the building erector.

SD-04 Samples

Samples; G

Accessories: One sample of each type of flashing, trim, closure, cap and similar items. Size shall be sufficient to show construction and configuration.

Roof and Wall Covering: One piece of each type and finish (exterior and interior) to be used, 225mm long, full width. The sample for factory color finished covering shall be accompanied by certified laboratory test reports showing that the sheets to be furnished are produced under a continuing quality control program and that a representative sample consisting of not less than 5 pieces has been tested and has met the quality standards specified for factory color finish.

Fasteners: Two samples of each type to be used, with statement

regarding intended use. If so requested, random samples of bolts, nuts, and washers as delivered to the jobsite shall be taken in the presence of the Contracting Officer and provided to the Contracting Officer for testing to establish compliance with specified requirements.

Gaskets and Insulating Compounds: Two samples of each type to be used and descriptive data.

Sealant: One sample, approximately 0.5 kg and descriptive data.

SD-07 Certificates

Metal Building Systems;

a. A Certificate from the metal building manufacturer stating that the metal building was designed in accordance with MBMA Low Rise Manual.

b. Mill certification for structural bolts, framing steel, roofing and siding, and steel wall liner panels.

c. Warranty certificate. At the completion of the project the Contractor shall furnish signed copies of the 5 year Warranty for Metal Building Roof System, a sample copy of which is attached to this section, the 20-year Manufacturer's Material Warranties, and the Manufacturer's 20-year System Weathertightness Warranty where one is required.

d. A certificate from the metal building manufacturer stating that the metal building was designed from a complete set of contract drawings and specifications and the the building furnished complies with the specified requirements.

e. SSMRS Test Report: Test report for the uplift resistance of the SSMRS. If a copy of the test report has previously been submitted to HQUSACE, a copy of the letter from HQUSACE acknowledging certification of acceptance of the system tested shall be submitted with the report. A copy of the test report shall be submitted to the Contracting Officer.

Insulation;

Certificate attesting that the polyisocyanurate insulation furnished for the project contains recovered material, and showing an estimated percent of such recovered material.

1.3 GENERAL REQUIREMENTS

The metal building system covered under this specification shall be provided by a single manufacturer and shall include all components and assemblies that form a building. Structural Standing Seam Metal Roofing System, when specified, shall be furnished as part of a single manufacturer's system.

1.3.1 Building Configurations and Building Systems

** Buildings shall have vertical walls and *shed* roofs. Roof slope shall be as shown on the drawings. Buildings shall be single-span structures

with one of the following framing systems: self-framing, column with single-span or continuous trusses, continuous beam frames, column with rigid frame, rigid frame (tapered beam or plate girder), tapered trussed girder rigid frame, or rigid frame. Exterior doors, windows, overhead doors louvers, and foundations shall be included in the metal building system. Building shall be a manufacturer's advertised product, except that dimensions shall be not less than those indicated, but exceeding the indicated dimensions only by the amount of the closest standard size thereto. The minimum inside clear dimensions shall be as shown on the drawings. Eave height shall be measured from the top of the finished floor to the intersection of the insides of the roof and sidewall sheets. The clear opening between the finished floor and the bottom of the roof steel shall be as indicated. **

A metal building system consists of an integrated set of mutually dependent components and assemblies that form a building including primary and secondary framing, covering, roofing, and accessories, which are manufacturered to permit inspection onsite prior to assembly or erection. A metal buildnig system does not include foundations, mechanical equipment, fire protection, electrical, etc.

1.3.2 Qualifications

1.3.2.1 Manufacturer

Metal building shall be the product of a recognized steel building systems manufacturer who has been in the practice of manufacturing steel buildings of the size and complexity of the building shown on the contract drawings, for a period of not less than 5 years. The manufacturer shall be chiefly engaged in the practice of designing and fabricating metal building systems. The manufacturer shall have an AISC Quality Certification, category MB in accordance with AISC FCD-90.

1.3.2.2 Installer

Erector shall have specialized experience in the erection of steel building systems for a period of at least 5 years, and at least 2 years experience in the erection of metal buildings of the size and complexity shown and provided by the selected manufacturer. The erector shall furnish temporary guys and bracing where needed for squaring, plumbing, and securing the structural framing against loads acting on the exposed framing, such as wind loads and seismic forces, as well as loads due to erection equipment and erection operation. Structural members shall not be field cut or altered. Welds, abrasions, and surfaces not shop primed or galvanized shall be primed after erection.

1.3.2.3 Manuifacturer's Representative

A representative of the metal building manufacturer, who is familiar with the design of the building supplied and experienced in the erection of metal buildings similar in size to the one required under this contract, shall be present at the job site during construction from the start of the structural framing erection until completion of the installation of exterior covering to assure that the building meets the specified requirements.

1.4 DESIGN REQUIREMENTS

The metal building system shall be designed by the system manufacturer

as a complete system. Members and connections not shown on the drawings shall be designed and furnished by the manufacturer and prepared in accordance with the AISC FCD-90 Program.

Design Conditions:

1. Loading combinations and definitions shall be in accordance with ASCE 7-95. Loading criteria as set out by MBMA Low Rise Manual shall apply only where specifically stated by this specification.

2. Dead Load: The dead load shall consist of the weight of the structural frame and all other materials of the building system.

3. Collateral Loads: Collateral laod of 24 kPa shall be applied to the entire structure to account for the weight of additional permanent materials other than the building system, such as sprinklers, mechanical systems, electrical systems, hung partitions, and ceilings. This allowance does not include the weight of hung equipment weighing 22.7 kg or more. Equipment loads of 22.7 kg or more shall be investigated and the structure (frame, purlins, girts) shall be strengthened as required. The Contractor is responsible for providing the Building Manufacturer the magnitude and approximate location of all concentrated loads greater than 22. 7 kg.

4. Roof Live Loads: Roof live loads shall be determined and applied in accordance with ASCE 7.

5. Roof Snow Loads: Roof snow loads shall be developed using a ground snow load as indicated in the Structural Notes on plan S1.1. Roof snow load shall be computed and applied in accordance with ASCE 7.

6. Roof Wind Uplift Loads: The design uplift wind pressures for the roof system shall be computed and applied in accordance with ASCE 7 using a basic wind speed, an importance factor, and an exposure category as indicated in the Structural Notes on plan S1.1. The design uplift force for each connection assembly shall be that pressure given for the area of the connection assembly, and multiplied by the safety factor of 2.25 when two or more fasteners are in each connection.

7. Thermal Loads: Roof panels shall be free to move in response to the expansion and contraction forces resulting from a total 93 degree C temperature range during the life of the structure.

8. Auxiliary Loads: Auxiliary (dynamic live) loads such as superimposed loads resulting from building machinery, craneways, and vehicles shall be as shown in the drawings. The Contractor shall verify that the auxiliary loads shown on the drawings exceed the loads imposed by the equipment supplied.

9. Concentrated Loads: Concentrated loads shall be applied at locations indicated on the drawings. The roof panels and concealded anchor clips shall be capable of resisting a 90.7 kg concentrated load at midspan on a 300 mm wide section of deck.

10. Seismic Loads: Seismic loads shall be computed in accordance with TI 809-04 "Seismic Design for Buildings".

11. Drift Provision: Lateral deflections, or drift at the roof level of a structure in relation to the floor or slab on grade, caused by deflection of horizontal force resisting elements shall be calculated based on a 50 year mean recurrance interval and shall not exceed h/125.

1.4.1 Foundations

Foundations shall be designed for an allowable soil bearing pressure and a minimum bottom of footing depth below final exterior grade elevation as noted in the Structural Notes on plan S1.1, a factor of safety of 1.5 for overturning, sliding and uplift, and a concrete compressive strength as specified in Section 03300 CAST-IN-PLACE STRUCTURAL CONCRETE.

1.4.2 Structural Members and Connections

Structural steel members and their connections shall be designed in accordance with AISC ASD Manual or AISC Pub No. S342 L. Structural cold-formed steel framing members and their connections shall be designed in accordance with TI 809-07. Aluminum structural members and their connections shall be designed in accordance with AA Design Manual. Framed openings shall be designed to structurally replace the covering and framing displaced. The allowable live load deflection of roof elements shall not exceed 1/180 of the span. Members with openings in their webs shall be designed with consideration of the additional stresses which will result due to the openings. Deflections of the steel framing above and along the side of rolling door openings shall be limited to a maximum of 1/2 of the allowable movement in the telescoping top roller of the doors to ensure proper operation of the doors.

1.4.3 Roofing and Siding Design

Steel or aluminum roofing and siding shall be designed in accordance with MBMA Low Rise Manual. Section modulus and moment of inertia of aluminum sheet shall be determined for actual cross section dimensions by the conventional methods for actual design stresses and by effective width concept for deflection in accordance with AA SAS-30. Maximum deflection for wall and roof panels under full dead and live and/or wind loads shall not exceed 1/180 of the span between supports. The design analysis shall establish that the roof when deflected under dead plus live loads, will not result in a negative gradient. Maximum deflections shall be based on sheets continuous across two or more supports with sheets unfastened and fully free to deflect. In addition to the loads indicated above, the roof decking shall be designed for a 91 kg concentrated load at midspan on a 300 mm wide section of deck. Wall panels are not premitted for diaphragms or shear walls. The methods for resisting lateral forces shall be cross-bracing, or wind columns.

1. Wall Panels: Maximum deflection for wall panels under full wind loads shall not exceed 1/180 of the span between suppports. Wall panels are not permitted for diaphragms or shear walls. The methods for resisting lateral forces shall be cross-bracing, rigid frames, or wind columns.

2. Roof Panels: The panel deflection under applied dead load plus live load and/or wind load shall not exceed 1/180 time the span between supports; deflections shall be based on roof panels being continuous across two or more supports, the specified fastener spacing, and the ability of the unfastened roof panel to rotate

freely on the support. The design analysis shall establish that the roof when deflected under dead plus live or snow loads, will not result in a negative gradient.

1.4.4 Gutters And Downspouts

Gutters and downspouts shall be designed according to the requirements of SMACNA Arch. Manual for storms which should be exceeded only once in 5 years, with adequate provision for thermal expansion and contraction.

1.4.5 Louvers

Louvers shall be fixed-blade type designed with insect screens, for a minimum net open area of 50 percent free air to be rainproof, and to resist vibration when air is passed at the rate of 2 meters per second.

1.4.6 Ventilators

1.4.7 Grounding and Lightning Protection

Grounding and lightning protection shall be provided as specified in Section 13100 LIGHTNING PROTECTION SYSTEM.

1.5 DESIGN ANALYSIS

The Contractor shall obtain the services of a licensed Professional Engineer to design the foundations. Seismic loads shall be computed in accordance with TI 809-04 SEISMIC DESIGN FOR BUILDINGS.

1.6 DELIVERY AND STORAGE

Materials shall be delivered to the site in a dry and undamaged condition and stored out of contact with the ground. Materials other than framing and structural members shall be covered with weathertight coverings and kept dry. Storage accommodations for roofing and siding shall provide good air circulation and protection from surface staining.

1.7 WARRANTIES

The Metal Building System (roofing, siding, and related components provided as part of the system) shall be warranted as described below against material and workmanship deficiencies, system deterioration caused by ordinary exposure to the elements and service design loads, leaks and wind uplift damage. Any emergency temporary repairs conducted by the owner shall not negate the warranties.

1.7.1 Prime Contractor's Weathertightness Warranty

The Metal Building System shall be warranted by the Contractor on a no penal sum basis for a period of five years against materials and workmanship deficiencies; system deterioration caused by exposure to the elements and/or inadequate resistance to specified service design loads, water leaks, and wind uplift damage. The Metal Building System covered under this warranty shall include, but is not limited to, the following: framing and structural members, roofing and siding panels and seams, interior or exterior gutters and downspouts, accessories, fasteners, trim, flashings and miscellaneous building closure items such as doors and windows (when furnished by the manufacturer), connectors, components, and fasteners, and other system components and assemblies

installed to provide a weathertight system; and items specified in other sections of these specifications that become part of the metal building system. All material and workmanship deficiencies, system deterioration caused by exposure to the elements and/or inadequate resistance to specified service design loads, water leaks and wind uplift damage shall be repaired as approved by the Contracting Officer. See the attached Contractor's written warranty for issue resolution of warrantable defects. This warranty shall warrant and cover the entire cost of repair or replacement, including all material, labor, and related markups. The Contractor shall supplement this warranty with written warranties from the installer and/or system manufacturer, which shall be submitted along with Contractor's warranty. However, the Contractor is ultimately responsible for this warranty. The Contractor's written warranty shall be as outlined in attached **WARRANTY FOR METAL BUILDING SYSTEMS**, and start upon final acceptance of the facility. The Contractor shall provide a separate bond in an amount equal to the installed total metal building system cost in favor of the owner (Government) covering the Contractor's warranty responsibilities effective throughout the five year Contractor's warranty period for the entire metal building system as outlined above.

1.7.2 Manufacturer's Materials and System Weathertightness Warranties

The Contractor shall furnish, in writing, the following manufacturer's material warranties to the Contracting Officer which cover all Metal Building System components:

a. A manufacturer's 20 year material warranty warranting that the specified aluminum, zinc-coated steel, aluminum-zinc alloy coated steel or aluminum-coated steel will not rupture, structurally fail, fracture, deteriorate, or become perforated under normal design atmospheric conditions and service design loads. Liability under this warranty shall be limited exclusively to the cost of either repairing or replacing nonconforming, ruptured, perforated, or structurally failed securement system, including fasteners and coil material.

b. A manufacturer's 20 year exterior material finish warranty on the factory colored finish warranting that the finish, under normal atmospheric conditions at the site, will not crack, peel, or delaminate; chalk in excess of a numerical rating of eight, as determined by ASTM D 4214test procedures; or change colors in excess of five CIE or Hunter Lab color difference (delta E) units in accordance with ASTM D 2244. Liability under this warranty is exclusively limited to replacing the defective coated material.

PART 2 PRODUCTS

2.1 FRAMING AND STRUCTURAL MEMBERS

Steel 3 mm or more in thickness shall conform to ASTM A 36/A 36M, ASTM A 529/A 529M, ASTM A 572/A 572M, or ASTM A 588/A 588M. Uncoated steel less than 3 mm in thickness shall conform to ASTM A 570/A 570M, ASTM A 606, or ASTM A 607. Galvanized steel shall conform to ASTM A 653/A 653M, G 90 coating designation, 1.143 mm minimum thickness. Aluminum-zinc coated steel shall conform to ASTM A 792/A 792M, AZ 55 coating designation, 1.143 mm minimum thickness. Aluminum sheet shall conform to ASTM B 209M ; 0.813 mm (0.032 inch) minimum thickness. Aluminum structural shapes and tubes shall conform to ASTM B 221M , or ASTM B 308/B 308M. Structural pipe shall conform to ASTM A 53/A 53M, ASTM A 252,

ASTM A 500, ASTM A 501, ASTM A 618, ASTM B 221M , ASTM B 241/B 241M or ASTM B 429. Holes for structural connections shall be made in the shop.

2.2 ROOFING AND SIDING

Roofing and siding shall be either steel or aluminum and shall have a factory color finish to match AEP Span's 'Hemlock Green".

2.2.1 Roofing

Length of sheets shall be sufficient to cover the entire length of any unbroken roof slope unless otherwise approved. Width of sheets with interlocking ribs shall provide not less than 400 mm of coverage in place. Panel shall match roof panels specified in section 07412. Roof deck assemblies shall be Class 90 as defined in UL 580.

2.2.2 Siding

Length of sheet shall be sufficient to cover the entire height of any unbroken height of wall surface unless otherwise approved. Width of sheets with interlocking ribs shall provide not less than 400 mm) of coverage in place. Siding shall have interlocking ribs for securing adjacent sheets. Siding shall be fastened to framework using concealed fasteners.

2.2.3 Steel Panels

Roofing and Siding shall be zinc-coated steel conforming to ASTM A 653/A 653M, G 90 coating designation; aluminum-zinc alloy coated steel conforming to ASTM A 792/A 792M, AZ 55 coating; or aluminum-coated steel conforming to ASTM A 463/A 463M, Type 2, coating designation T2E5. Panels shall be 0.610 mm thick minimum.

2.2.4 Aluminum Panels

Roofing and Siding shall be aluminum alloy conforming to ASTM B 209M , temper as required for the forming operation, minimum 0.813 mm thick.

2.2.5 Factory Color Finish

Wall and roof panels shall have a factory applied polyvinylidene fluoride finish on the exposed side. The exterior finish shall consist of a baked-on topcoat with an appropriate prime coat. Color shall match roof panels specified in Section 07412. The exterior coating shall be a nominal 0.025 mm thickness consisting of a topcoat of not less than 0.018 mm dry film thickness and the paint manufacturer's recommended primer of not less than 0.005 mm thickness. The interior finish shall consist of the manufacturer's recommended thickness primer coating.

2.2.6 Accessories

Flashing, trim, metal closure strips and curbs, fascia, caps, diverters, and similar metal accessories shall be the manufacturer's standard products. Exposed metal accessories shall be finished to match the building finish. Molded closure strips shall be bituminous-saturated fiber, closed-cell or solid-cell synthetic rubber or neoprene, or polyvinyl chloride premolded to match configuration of the roofing or siding and shall not absorb or retain water.

2.3 WALL LINERS

Wall liners shall be 0.6 mm thick minimum for aluminum or 0.45 mm thick minimum for steel. Matching metal trim shall be provided at base of wall liner, at top of wall liner, around openings in walls and over interior and exterior corners. Wall liners shall have manufacturer's standard finishes. Colors shall be selected from manufacturer's standard finishes.

2.4 FASTENERS

Fasteners shall be as recommended by the manufacturer to meet the design strength requirements.

2.5 WINDOWS

Windows shall be as specified in Section 08520.

2.6 DOORS

2.6.1 Hinged Doors

Hinged doors and frames shall receive a galvanic coating and factory primer and shall conform to the requirements of Section 08110 STEEL DOORS AND FRAMES. Exterior doors shall have top edges closed flush and sealed against water penetration. Hardware shall be as specified in Section 08710 DOOR HARDWARE.

2.6.2 Overhead Rolling Doors

Overhead rolling doors shall conform to the requirements of Section 08330 OVERHEAD ROLLING DOORS. Hardware shall be as specified in Section 08710 DOOR HARDWARE.

2.7 INSULATION

Thermal resistance of insulation shall be not less than the R-values shown on the contract drawings. R-values shall be determined at a mean temperature of 24 degrees C F in accordance with ASTM C 518. Roof and wall insulation shall be a standard product with the insulation manufacturer, factory marked or identified with insulation manufacturer's name or trademark and R-value. Insulation including facings shall have a flame spread not in excess of 25 and a smoke developed rating not in excess of 50 when tested in accordance with ASTM E 84. Contractor shall comply with EPA requirements in accordance with Section 01670 RECYCLED / RECOVERED MATERIALS.

2.7.1 Rigid Board Insulation

2.7.1.1 Polyisocyanurate

Polyisocyanurate insulation shall conform to ASTM C 1289, Type I, Class 2 (having a minimum recovered material content of 9 percent by weight of core material in the polyisocyanurate portion). For impermeable faced polyisocyanurate (Ex: aluminum foil) the maximum design R-value per 25 mm of insulation used shall be 1.27.

2.7.1.2 Polystyrene

Insulation shall conform to ASTM C 578, Type IV

2.7.1.3 Blanket Insulation

Blanket insulation shall conform to ASTM C 991.

2.7.1.4 Mineral Fiber

Insulation shall conform to ASTM C 612.

2.7.2 Insulation Retainers

Retainers shall be type, size and design necessary to adequately hold the insulation and to provide a neat appearance. Metallic retaining members shall be nonferrous or have a nonferrous coating. Nonmetallic retaining members, including adhesives used in conjunction with mechanical retainers or at insulation seams, shall have a fire resistance classification not less than that permitted for the insulation.

2.8 SEALANT

Sealant shall be an elastomeric type containing no oil or asphalt. Exposed sealant shall be colored to match the applicable building color and shall cure to a rubber like consistency.

2.9 GASKETS AND INSULATING COMPOUNDS

Gaskets and insulating compounds shall be nonabsorptive and suitable for insulating contact points of incompatible materials. Insulating compounds shall be nonrunning after drying.

2.10 VAPOR RETARDER

2.10.1 Vapor Retarders as Integral Facing

Insulation facing shall have a permeability of 1.15 ng per Pa-second-square meter or less when tested in accordance with ASTM E 96. Facing shall be white reinforced polypropylene kraft laminate (PSK). Facings and finishes shall be factory applied.

2.10.2 Vapor Retarders Separate from Insulation

Vapor retarder material shall be polyethylene sheeting conforming to the requirements of ASTM D 4397. A single ply of 0.25 mm polyethylene sheet; or, at the option of the Contractor, a double ply of 0.15 mm polyethylene sheet shall be used. A fully compatible polyethylene tape shall be provided which has equal or better water vapor control characteristics than the vapor retarder material. A cloth industrial duct tape in a utility grade shall also be provided to use as needed to protect the vapor retarder from puncturing.

2.11 SHOP PRIMING

Ferrous surfaces shall be cleaned of oil, grease, loose rust, loose mill scale, and other foreign substances and shop primed. Primer coating shall be in accordance with the manufacturer's standard system.

PART 3 EXECUTION

3.1 ERECTION

Dissimilar materials which are not compatible when contacting each other shall be insulated from each other by means of gaskets or insulating compounds. Improper or mislocated drill holes in panels shall be plugged with an oversize screw fastener and gasketed washer; however, panels with an excess of such holes or with such holes in critical locations shall not be used. Exposed surfaces shall be kept clean and free from sealant, metal cuttings, excess material from thermal cutting, and other foreign materials. Exposed surfaces which have been thermally cut shall be finished smooth within a tolerance of 3 mm. Stained, discolored or damaged sheets shall be removed from the site. Welding of steel shall conform to AWS D1.1; welding of aluminum shall conform to AA Design Manual.

3.1.1 Framing Members and Anchor Bolts

Onsite flame cutting of framing members, with the exception of small access holes in structural beam or column webs, will not be permitted. Concrete work is specified in Section 03300 CAST-IN-PLACE STRUCTURAL CONCRETE. Anchor bolts shall be accurately set by template while the concrete is in a plastic state. Members shall be accurately spaced to assure proper fitting of panels. As erection progresses, the work shall be securely fastened to resist the dead load and wind and erection stresses.

3.1.2 Roofing and Siding Installation

Siding shall be applied with the longitudinal configurations in the vertical position. Roofing shall be applied with the longitudinal configurations in the direction of the roof slope. Accessories shall be fastened into framing members, except as otherwise approved. Closure strips shall be provided where necessary to provide weathertight construction. Fastener and fastener spacing shall be in accordance with manufacture design.

3.1.3 Installation of Gutters and Downspouts

Gutters and downspouts shall be rigidly attached to the building. Spacing of cleats for gutters shall be 400 mm maximum. Spacing of brackets and spacers for gutters shall be 1 m maximum. Supports for downspouts shall be spaced according to manufacturer's recommendations.

3.1.4 Louvers and Ventilators

Louvers and ventilators shall be rigidly attached to the supporting construction to assure a weather tight installation.

3.1.5 Doors and Windows

Doors and windows, including frames and hardware, shall be securely anchored to the supporting construction, shall be installed plumb and true, and shall be adjusted as necessary to provide proper operation. Joints at doors and windows shall be sealed according to manufacturer's recommendations to provide weathertight construction.

3.1.6 Insulation Installation

Insulation shall be installed as indicated and in accordance with manufacturer's instructions.

3.1.6.1 Board Insulation with Blanket Insulation

Rigid or semirigid board insulation shall be laid in close contact. If more than one layer of insulation is required, joints in the second layer shall be offset from joints in the first layer.

3.1.6.2 Blanket Insulation

Blanket insulation shall be installed over the purlins and held tight against the metal roofing. It shall be supported by an integral facing or other commercially available support system.

3.1.7 Vapor Retarder Installation

3.1.7.1 Integral Facing on Blanket Insulation

Integral facing on blanket insulation shall have the facing lapped and sealed with a compatible tape to provide a vapor tight membrane.

3.1.7.2 Polyethylene Vapor Retarder

The polyethylene vapor retarder membrane shall be installed over the entire surface. A fully compatible polyethylene tape shall be used to seal the edges of the sheets to provide a vapor tight membrane. Sheet edges shall be lapped not less than 150 mm . Sufficient material shall be provided to avoid inducing stresses in the sheets due to stretching or binding. All tears or punctures that are visible in the finished surface, at any time during the construction process, shall be sealed with polyethylene tape.

3.1.8 Wall Liner

Wall liner shall be securely fastened into place in accordance with the manufacturer's recommendation and in a manner to present a neat appearance.

3.2 FIELD PAINTING

Immediately upon detection, abraded or corroded spots on shop-painted surfaces shall be wire brushed and touched up with the same material used for the shop coat. Shop-primed ferrous surfaces exposed on the outside of the building and all shop-primed surfaces of doors and windows shall be painted with two coats of an approved exterior enamel. Factory color finished surfaces shall be touched up as necessary with the manufacturer's recommended touch-up paint.

CONTRACTOR'S FIVE (5) YEAR NO PENAL SUM WARRANTY
FOR
METAL BUILDING SYSTEM

FACILITY
DESCRIPTION:_____

BUILDING
NUMBER:_____

CORPS OF ENGINEERS CONTRACT
NUMBER:_____

CONTRACTOR

CONTRACTOR:_____
ADDRESS:_____

POINT OF
CONTACT:_____

TELEPHONE
NUMBER:_____

OWNER

OWNER:_____
ADDRESS:_____

POINT OF
CONTACT:_____

TELEPHONE
NUMBER:_____

CONSTRUCTION AGENT

CONSTRUCTION
AGENT:_____
ADDRESS:_____

POINT OF
CONTACT:_____
_
TELEPHONE
NUMBER:_____

CONTRACTOR'S FIVE (5) YEAR NO PENAL SUM WARRANTY
FOR
METAL BUILDING SYSTEM
(continued)

THE METAL BUILDING SYSTEM INSTALLED ON THE ABOVE NAMED BUILDING IS WARRANTED BY [_____] FOR A PERIOD OF FIVE (5) YEARS AGAINST WORKMANSHIP AND MATERIAL DEFICIENCIES, WIND DAMAGE AND STRUCTURAL FAILURE WITHIN PROJECT SPECIFIED DESIGN LOADS, AND LEAKAGE. THE METAL BUILDING SYSTEM COVERED UNDER THIS WARRANTY SHALL INCLUDE, BUT IS NOT LIMITED TO, THE FOLLOWING: FRAMING AND STRUCTURAL MEMBERS, ROOFING AND SIDING PANELS AND SEAMS, INTERIOR OR EXTERIOR GUTTERS AND DOWNSPOUTS, ACCESSORIES, TRIM, FLASHINGS AND MISCELLANEOUS BUILDING CLOSURE ITEMS SUCH AS DOORS AND WINDOWS (WHEN FURNISHED BY THE MANUFACTURER), CONNECTORS, COMPONENTS, AND FASTENERS, AND OTHER SYSTEM COMPONENTS AND ASSEMBLIES INSTALLED TO PROVIDE A WEATHERTIGHT SYSTEM; AND ITEMS SPECIFIED IN OTHER SECTIONS OF THESE SPECIFICATIONS THAT BECOME PART OF THE METAL BUILDING SYSTEM. ALL MATERIAL AND WORKMANSHIP DEFICIENCIES, SYSTEM DETERIORATION CAUSED BY EXPOSURE TO THE ELEMENTS AND/OR INADEQUATE RESISTANCE TO SPECIFIED SERVICE DESIGN LOADS, WATER LEAKS AND WIND UPLIFT DAMAGE SHALL BE REPAIRED AS APPROVED BY THE CONTRACTING OFFICER.

ALL MATERIAL DEFICIENCIES, WIND DAMAGE, STRUCTURAL FAILURE AND LEAKAGE ASSOCIATED WITH THE METAL BUILDING SYSTEM COVERED UNDER THIS WARRANTY SHALL BE REPAIRED AS APPROVED BY THE CONTRACTING OFFICER. THIS WARRANTY SHALL COVER THE ENTIRE COST OF REPAIR OR REPLACEMENT, INCLUDING ALL MATERIAL, LABOR, AND RELATED MARKUPS. THE ABOVE REFERENCED WARRANTY COMMENCED ON THE DATE OF FINAL ACCEPTANCE ON [_____] AND WILL REMAIN IN EFFECT FOR STATED DURATION FROM THIS DATE.

SIGNED, DATED, AND NOTARIZED (BY COMPANY PRESIDENT)

_____
(Company President) (Date)

CONTRACTOR'S FIVE (5) YEAR NO PENAL SUM WARRANTY
FOR
METAL BUILDING SYSTEM
(continued)

THE CONTRACTOR SHALL SUPPLEMENT THIS WARRANTY WITH WRITTEN WARRANTIES FROM THE MANUFACTURER AND/OR INSTALLER OF THE METAL BUILDING SYSTEM, WHICH SHALL BE SUBMITTED ALONG WITH THE CONTRACTOR'S WARRANTY. HOWEVER, THE CONTRACTOR WILL BE ULTIMATELY RESPONSIBLE FOR THIS WARRANTY AS OUTLINED IN THE SPECIFICATIONS AND AS INDICATED IN THIS WARRANTY.

EXCLUSIONS FROM COVERAGE

1. NATURAL DISASTERS, ACTS OF GOD (LIGHTNING, FIRE, EXPLOSIONS, SUSTAINED WIND FORCES IN EXCESS OF THE DESIGN CRITERIA, EARTHQUAKES, AND HAIL).

2. ACTS OF NEGLIGENCE OR ABUSE OR MISUSE BY GOVERNMENT OR OTHER PERSONNEL,INCLUDING ACCIDENTS, VANDALISM, CIVIL DISOBEDIENCE, WAR, OR DAMAGE CAUSED BY FALLING OBJECTS.

3. DAMAGE BY STRUCTURAL FAILURE, SETTLEMENT, MOVEMENT, DISTORTION, WARPAGE, OR DISPLACEMENT OF THE BUILDING STRUCTURE OR ALTERATIONS MADE TO THE BUILDING.

4. CORROSION CAUSED BY EXPOSURE TO CORROSIVE CHEMICALS, ASH OR FUMES GENERATED OR RELEASED INSIDE OR OUTSIDE THE BUILDING FROM CHEMICAL PLANTS, FOUNDRIES, PLATING WORKS, KILNS, FERTILIZER FACTORIES, PAPER PLANTS, AND THE LIKE.

5. FAILURE OF ANY PART OF THE BUILDING SYSTEM DUE TO ACTIONS BY THE OWNER WHICH INHIBIT FREE DRAINAGE FROM THE ROOF, GUTTERS AND DOWNSPOUTS; OR CONDITIONS WHICH CREATE PONDING WATER ON THE ROOF OR AGAINST THE BUILDING SIDING.

6. THIS WARRANTY APPLIES TO THE METAL BUILDING SYSTEM. IT DOES NOT INCLUDE ANY CONSEQUENTIAL DAMAGE TO THE BUILDING INTERIOR OR CONTENTS WHICH IS COVERED BY THE WARRANTY OF CONSTRUCTION CLAUSE INCLUDED IN THIS CONTRACT.

7. THIS WARRANTY CANNOT BE TRANSFERRED TO ANOTHER OWNER WITHOUT WRITTEN CONSENT OF THE CONTRACTOR AND THIS WARRANTY AND THE CONTRACT PROVISIONS WILL TAKE PRECEDENCE OVER ANY CONFLICTS WITH STATE STATUTES. REPORTS OF LEAKS AND BUILDING SYSTEM DEFICIENCIES SHALL BE RESPONDED TO WITHIN 48 HOURS OF RECEIPT OF NOTICE BY TELEPHONE OR IN WRITING FROM EITHER THE OWNER, OR CONTRACTING OFFICER. EMERGENCY REPAIRS, TO PREVENT FURTHER ROOF LEAKS, SHALL BE INITIATED IMMEDIATELY; A WRITTEN PLAN SHALL BE SUBMITTED FOR APPROVAL TO REPAIR OR REPLACE THIS SSSMR SYSTEM WITHIN SEVEN CALENDAR DAYS. ACTUAL WORK FOR PERMANENT REPAIRS OR REPLACEMENT SHALL BE STARTED WITHIN 30 DAYS AFTER RECEIPT OF NOTICE, AND COMPLETED WITHIN A REASONABLE TIME FRAME. IF THE CONTRACTOR FAILS TO ADEQUATELY RESPOND TO THE WARRANTY PROVISIONS, AS STATED

CONTRACTOR'S FIVE (5) YEAR NO PENAL SUM WARRANTY
FOR
METAL BUILDING SYSTEM
(Exclusions from Coverage Continued)

IN THE CONTRACTAND AS CONTAINED HEREIN, THE CONTRACTING OFFICER MAY HAVE THE METAL BUILDING SYSTEM REPLACED OR REPAIRED BY OTHERS AND CHARGE THE COST TO THE CONTRACTOR. IN THE EVENT THE CONTRACTOR DISPUTES THE EXISTENCE OF A WARRANTABLE DEFECT, THE CONTRACTOR MAY CHALLENGE THE OWNER'S DEMAND FOR REPAIRS AND/OR REPLACEMENT DIRECTED BY THE OWNER OR CONTRACTING OFFICER EITHER BY REQUESTING A CONTRACTING OFFICER'S DECISION, UNDER THE CONTRACT DISPUTES ACT, OR BY REQUESTING THAT AN ARBITRATOR RESOLVE THE ISSUE. THE REQUEST FOR AN ARBITRATOR MUST BE MADE WITHIN 48 HOURS OF BEING NOTIFIED OF THE DISPUTED DEFECTS. UPON BEING INVOKED THE PARTIES SHALL, WITHIN 10 DAYS JOINTLY REQUEST A LIST OF FIVE (5) ARBITRATORS FROM THE FEDERAL MEDIATION AND CONCILIATION SERVICE. THE PARTIES SHALL CONFER WITHIN 10 DAYS AFTER RECEIPT OF THE LIST TO SEEK AGREEMENT ON AN ARBITRATOR. IF THE PARTIES CANNOT AGREE ON AN ARBITRATOR, THE CONTRACTING OFFICER AND THE PRESIDENT OF THE CONTRACTOR'S COMPANY WILL STRIKE ONE (1) NAME FROM THE LIST ALTERNATIVELY UNTIL ONE NAME REMAINS. THE REMAINING PERSON SHALL BE THE DULY SELECTED ARBITRATOR. THE COSTS OF THE ARBITRATION, INCLUDING THE ARBITRATOR'S FEE AND EXPENSES, COURT REPORTER, COURTROOM OR SITE SELECTED ETC., SHALL BE BORNE EQUALLY BETWEEN THE PARTIES. EITHER PARTY DESIRING A COPY OF THE TRANSCRIPT SHALL PAY FOR THE TRANSCRIPT. A HEARING WILL BE HELD AS SOON AS THE PARTIES CAN MUTUALLY AGREE. A WRITTEN ARBITRATOR'S DECISION WILL BE REQUESTED NOT LATER THAN 30 DAYS FOLLOWING THE HEARING. THE DECISION OF THE ARBITRATOR WILL NOT BE BINDING; HOWEVER, IT WILL BE ADMISSIBLE IN ANY SUBSEQUENT APPEAL UNDER THE CONTRACT DISPUTES ACT.

A FRAMED COPY OF THIS WARRANTY SHALL BE POSTED IN THE MECHANICAL ROOM OR OTHER APPROVED LOCATION DURING THE ENTIRE WARRANTY PERIOD.

-- End of Section --