GEO/10-235
Final

U.S. Army Corps of Engineers
Louisville District

Report of Findings
Raco Army Airfield and Bomarc Missile Site
Remedial Investigation/Feasibility Study Activities
Hiawatha National Forest
Raco, Michigan

Prepared for
U.S. Army Corps of Engineers
Louisville District Contract No. W912QR-08-D-0014
Delivery Order 0007

Prepared by
GEO Consultants, LLC
325 Kentucky Avenue
Kevil, Kentucky 42053

September 2010

CONTENTS

TABLES v
APPENDICES v
ACRONYMS vi

1. INTRODUCTION 1
    1.1 PROJECT OBJECTIVES 1
    1.2 ORGANIZATION OF REPORT OF FINDINGS 1

2. SITE BACKGROUND 3
    2.1 SITE HISTORY 3
    2.2 SITE PHYSICAL CHARACTERISTICS 3
        2.2.1 Site Topography 3
        2.2.2 Site Geology 3
        2.2.3 Site Hydrogeology 4
    2.3 SUMMARY OF PREVIOUS INVESTIGATIONS AT RACO AAF 4
        2.3.1 Previous Investigations (1986 – 2002) 4
        2.3.2 GEO 2007 9

3. FIELD INVESTIGATION 11
    3.1 VERTICAL AQUIFER PROFILING 11
        3.1.1 Soil Investigation 11
        3.1.2 Groundwater Investigation 12
    3.2 MONITORING WELL INSTALLATION AND DEVELOPMENT 16
    3.3 GROUNDWATER SAMPLING EVENT – OCTOBER 28 - 29, 2009 18
    3.4 GROUNDWATER SAMPLING FROM EXISTING WATER SUPPLY WELLS 21
    3.5 WELL SURVEY 24
    3.6 FIELD QUALITY CONTROL PROCEDURES AND DOCUMENTATION 24
        3.6.1 Field Instrument Calibration and Maintenance 24
        3.6.2 Field Quality Control Samples 24
        3.6.3 Field Logbooks 25
        3.6.4 Field Performance Audits 25
        3.6.5 Corrective Actions 26
    3.7 SAMPLE CUSTODY, HANDLING, AND HOLDING TIMES 26
        3.7.1 Documentation of Custody 26
        3.7.2 Holding Times and Turnaround Time 27
        3.7.3 Sample Numbering System 27
    3.8 MANAGEMENT OF INVESTIGATION-DERIVED WASTE (IDW) 28

4. VERTICAL AQUIFER PROFILE INVESTIGATION 29
    4.1 SUMMARY OF VAP INVESTIGATION 29
    4.2 CONCLUSION 29

5. GROUNDWATER SAMPLING EVENT – OCTOBER 2009 30
    5.1 SUMMARY OF GROUNDWATER SAMPLING EVENT 30
    5.2 CONCLUSION 30

6. REFERENCES 31

TABLES

Table 3-1. Boring locations and elevations 12
Table 3-2. Summary of groundwater samples during the VAP investigation 14
Table 3-3. TCE concentrations in groundwater encountered during the VAP investigation 15
Table 3-4. Well construction details 17
Table 3-5. Monitoring well depths and water levels 18
Table 3-6. Summary of October 2009 monitoring well groundwater sampling and analyses 19
Table 3-7. Project-specific reporting limits and method detection limits for CT Laboratories 20
Table 3-8. Groundwater sample containers, preservation and holding times 20
Table 3-9. Monitoring well data with TCE concentrations at MBA 21
Table 3-10. Water supply well sample collection and analyses at Raco AAF 23
Table 3-11. Water supply wells within a one-mile radius of Raco AAF 24

APPENDICES

Appendix A – Figures
- Figure 1-1. Site location map for Raco Army Airfield and Bomarc Missile Site.
- Figure 1-2. Site vicinity map for Raco Army Airfield and Bomarc Missile Site.
- Figure 1-3. RI/FS activities boring locations.
- Figure 1-4. Water supply wells located at the Raco Army Airfield and Bomarc Missile Site.
- Figure 2-1. Topographic map for Raco Army Airfield and Bomarc Missile Site.
- Figure 2-2. Raco Army Airfield and Bomarc Missile Site Missile Battery Area monitoring well locations.
- Figure 3-1. VAP screen point sampler.
- Figure 3-2. Cross section of TCE impact plume.
- Figure 3-3. TCE concentrations in groundwater.
- Figure 3-4. Potentiometric surface map.
- Figure 3-5. Water supply wells – one mile radius.
- Figure 4-1. 1972 Aerial photograph.

Appendix B – Monitoring Well Installation Diagrams and VAP Boring Logs

Appendix C – Purge Logs; Field Book Pages; Northwoods, Inc. Survey Report; Waste Disposal Documentation

Appendix D – Water Supply Well Information Sheets

Appendix E – Analytical Results

Appendix F – Quality Assurance Summary Report and Data Verification Reports

ACRONYMS

°C	degrees Celsius
amsl	above mean sea level
Barr	Barr Engineering
BCM	BCM Engineers, Planners, Scientists, and Laboratory Services
bgs	below ground surface
BTEX	benzene, toluene, ethylbenzene, xylenes
CELRL	U.S. Army Corps of Engineers, Louisville District
cm	centimeter(s)
DI	deionized (water)
DO	dissolved oxygen
DoD	Department of Defense
Earth Tech	Earth Tech, Inc.
EM	Engineering Manual
Envirodyne	Envirodyne Engineers Inc.
EB	equipment blank
eV	electron-volt
FD	field duplicate
FS	Feasibility Study
GEO	GEO Consultants, LLC
ID	identification
IDW	Investigation-Derived Waste
IT Corp.	International Technology Corporation
kg	kilogram(s)
L	liter(s)
MBA	Missile Battery Area
MDNRE	Michigan Department of Natural Resources and Environment
mg	milligram(s)
mL	milliliter(s)
mV	milliVolt(s)
MS	matrix spike
MSD	matrix spike duplicate
MW	Monitoring Well
NAVD	North American Vertical Datum
ND	non-detect
NTU	Nephelometric Turbidity Units
ORP	oxidation/reduction potential
PCB	polychlorinated biphenyls
PCP	pentachlorophenol
PID	photoionization detector
PNA	poly-nuclear aromatic
PVC	polyvinyl chloride
QA	Quality Assurance
QC	Quality Control
QSM	Quality System Manual
Raco AAF	former Raco Army Airfield and Bomarc Missile Site
RCDWC	Residential and Commercial I Drinking Water Criteria
RI	Remedial Investigation
sec	second(s)

Smithers	Smithers Scientific Services, Inc.
SOW	Scope of Work
SU	Standard Unit
Sverdrup	Sverdrup Environmental, Inc
SVOC	semivolatile organic compound
TB	trip blank
TCE	trichloroethene
TOS	top of screen
USACE	U.S. Army Corps of Engineers
USEPA	U.S. Environmental Protection Agency
USFS	U.S. Forest Service
UST	underground storage tank
VAP	vertical aquifer profiling
VOA	volatile organic analysis
VOC	volatile organic compound
µg	microgram(s)

1. INTRODUCTION

1.1 PROJECT OBJECTIVES

The overall objective of the project, as described in this Report of Findings, was to perform Remedial Investigation (RI)/Feasibility Study (FS) activities at the Missile Battery Area (MBA) of the former Raco Army Airfield and Bomarc Missile Site (Raco AAF), Raco, Michigan (Figure 1-1, Figure 1-2: all figures are provided in Appendix A). The primary objectives of the RI/FS activities were to 1) determine the full extent of the groundwater contamination at the site and, if possible, identify the source(s) of the contaminants; and 2) advance vertical aquifer profile (VAP) borings and install additional monitoring wells in locations that will effectively monitor source area(s) and plume conditions over time (Figure 1-3). The secondary objective was to collect data to better understand the hydrogeological conditions at the site and the affect these conditions have on the fate and transport of contaminants within the groundwater plume.

The Raco AAF site currently is owned by the U.S. Department of Agriculture and operated by the U.S. Forest Service (USFS) as the Hiawatha National Forest. GEO Consultants, LLC (GEO) prepared this Report of Findings under a contract with the U.S. Army Corps of Engineers (USACE), Louisville District (CELRL), Contract No. W912QR-08-D-0014, Delivery Order Number 0007. The primary regulatory agency for overseeing these RI/FS activities is the Michigan Department of Natural Resources and Environment (MDNRE), formerly referred to as the Michigan Department of Environmental Quality.

This report describes the results of tasks performed by GEO at Raco AAF, including, but not limited to, the following activities:

- Advancement of 10 borings at the Raco AAF MBA (Figure 1-3) using VAP to collect and analyze soil and groundwater samples to assist in the vertical and horizontal delineation of volatile organic compounds (VOCs) detected in previous groundwater investigations.
- The installation of five monitoring wells based on the results of on-site mobile laboratory VOC analysis of groundwater samples collected during VAP.
- One round of groundwater sampling from 12 monitoring wells (seven pre-existing and the five installed as part of this investigation) and four water supply wells located on the property. Samples were analyzed for VOCs by fixed-base analytical laboratories.
- A well survey to locate domestic drinking water and supply wells within a one mile radius of the MBA.

1.2 ORGANIZATION OF REPORT OF FINDINGS

This Report of Findings is organized as follows:

- Section 1 presents the overall project objectives and organization of this report.
- Section 2 describes the site history, physical characteristics, and results of previous site investigations.
- Section 3 describes the approach and results of the field investigations.
- Section 4 contains a summary of the VAP investigation.
- Section 5 contains a summary of the groundwater sampling investigation.
- Section 6 presents a list of references that were used to prepare this Report of Findings.

Other documents associated with this project include:

- GEO 2009a. Quality Control Plan, Raco Army Air Force Base and Bomarc Missile Site, Remedial Investigation/Feasibility Study Activities, Hiawatha National Forest, Raco, Michigan. May.

- GEO 2009b. Site-Specific Safety and Health Plan, Raco Army Air Force Base and Bomarc Missile Site, Remedial Investigation/Feasibility Study Activities, Hiawatha National Forest, Raco, Michigan. September.

- GEO 2009c. Sampling and Analysis Plan, Raco Army Air Force Base and Bomarc Missile Site, Remedial Investigation/Feasibility Study Activities, Hiawatha National Forest, Raco, Michigan. September.

- GEO 2009d. Work Plan, Raco Army Air Force Base and Bomarc Missile Site, Remedial Investigation/Feasibility Study Activities, Hiawatha National Forest, Raco, Michigan. September.

2. SITE BACKGROUND

2.1 SITE HISTORY

The Raco AAF occupies approximately one square mile and is located 18 air miles southwest of Sault Ste. Marie, Michigan, in the Hiawatha National Forest. The Department of Defense (DoD) used the site as an airfield for 21 years and as a missile base for about 13 years, ending in 1972. The site consisted of a triangular-shaped airfield with 5000 foot runways and a Bomarc Missile Site containing 28 missile silos and associated support facilities. The site has been intermittently controlled by the DoD and its predecessor agencies since 1895. In 1925 the site was placed under USFS management and was subject to certain reuse rights for defense purposes. The Secretary of Agriculture transferred 240 acres for airfield use with a permit dated August 27, 1942. Based on U.S. Geological Survey topographic maps, the airfield covers approximately 640 acres and was constructed between 1942 and 1943. Around 1960 the missile base was constructed on 153.54 acres of land southeast of the airfield. On January 19, 1964, the Air Force released the airfield property to the USFS but retained the acreage covering the missile area. On June 30, 1973 the missile area was released to the USFS.

Since 1973, the USFS has entered into several permit agreements with outside interests. They are summarized below [from *Raco, A Case Study by Carl L. Woodruff, Project Manager, and Ronald Pearce, USACE Detroit District and Ronald Pearce, Sault Ste. Marie Area Office, USACE Detroit District*, undated but post-1989 (Woodruff and Pearce 1989)].

- 1973 – a sawmill operation by a local Indian Tribe resulting in accumulation of a large pile (approximately 5000 cubic yards) of sawdust, wood waste, and other debris
- 1978 – the sale and removal of seven of the base buildings, the water tower, and 28 missile silo shelters
- 1981 and 1984 – the dumping of broken concrete and waste construction materials into the silos. This debris apparently resulted from road repair operations on Route M-28 and was used to reduce the hazard potential of public travel near open missile silos
- Present – the airfield runways and other portions of the site are currently used during the winter months for automobile tire testing by Smithers Scientific Services, Inc. The buildings and water supply wells located on the northeast portion of the Raco AAF site were added by Smithers.

A description of topography, geology and hydrogeology at Raco AAF follows in Section 2.2. Previous investigations are summarized in Section 2.3.

2.2 SITE PHYSICAL CHARACTERISTICS

2.2.1 Site Topography

The topography at the site is relatively flat with elevations ranging from 900 to 920 feet above mean sea level [amsl (Figure 2-1)].

2.2.2 Site Geology

The geology consists of a series of thick, unconsolidated glacial deposits of the Quaternary Period. Borings indicate that glacial deposits are lithologically homogeneous without significant grain size or color changes. Deposits display fine-grained sands throughout with little fines and occasional gravel intermixed. A 260 feet deep well installed approximately 2.5 miles south from the site in 1994 did not encounter bedrock. A 2002 review of documents estimated bedrock to be 380 feet or more [Barr

Engineering (Barr), 2002, from Earth Tech, Inc., (Earth Tech), 2005]. The top bedrock unit underlying the glacial sands in this section of Chippewa County is the Engadine dolomite. This Silurian dolomite is named for Engadine, Mackinac County, Michigan. It consists of very massive, hard, very crystalline dolomite, distinctly bluish or mottled and streaked with blue. Thickness is 54 to 95 feet and it overlies the Manistique series [Reed and Daniels (compilers) 1987].

The glacial deposits and features of Chippewa County are predominantly of the Wisconsin ice age. During late Wisconsin time, Lake Algonquin, and early stage in the succession of the Upper Great Lakes, covered nearly all of Chippewa County (Vanlier and Deutsch 1958). Glacial deposits in Chippewa County are composed of till, outwash, lacustrine sediments, and dunes. Most of the moraines in Chippewa County were originally deposited in glacial Lake Algonquin. Moderate supplies of water are possible from sand and gravel till found in moraines, predominately on the eastern part of the county. Till-plain deposits are predominately till and often lie above the water table in Chippewa County and are not considered an adequate source of water. Lacustrine sediments are not a sufficient source of water, but tend to overlie sand and gravel deposits from outwash or till creating a confining layer in these areas. Dune deposits may yield small supplies of water from shallow wells and also provide areas of recharge. Dune deposits occur throughout the county, but are concentrated near Whitefish Bay. The bedrock aquifers underlie glacial deposits in most of Chippewa County. The bedrock units in the county dip to the south, toward the center of the Michigan Basin (Chippewa County Summary n.d.).

2.2.3 Site Hydrogeology

Groundwater flow trends east-southeast across the site and is more easterly in the eastern portion of the site. Throughout most of Chippewa county, wells six inches in diameter yield 10 to 100 gallons per minute. The most permeable glacial deposits are outwash plains and consist primarily of sand and gravel (Vanlier and Deutsch 1958). In the Bay Mills Indian Community, located in the northeastern portion of the county in the St. Marys watershed, an aquifer test was performed for a well in the sand and gravel aquifer. The estimated transmissivity and storage coefficient are 4300 feet^2/day and 0.0005, respectively (Weaver 1996). The horizontal hydraulic gradient across the Raco AAF site has been approximated at 0.002 feet (Barr as cited in Earth Tech 2005). Slug tests performed in 1994 used both falling and rising head methods to determine hydraulic conductivity. The data collected using the rising head slug test, Monitoring Well (MW)-05 through MW-15 (excluding MW-08), produced results from 0.0242 centimeters (cm) per second (sec) to 0.23 cm/sec. The Barr report (Earth Tech 2005) suggests the falling method may produce questionable data. A literature search conducted by Smithers in 2002 determined the hydraulic conductivity of similar sediments in the area to be 0.002 cm/sec (Barr, as cited Earth Tech 2005).

2.3 SUMMARY OF PREVIOUS INVESTIGATIONS AT RACO AAF

The following is a summary of previous investigations and studies performed at the site.

2.3.1 Previous Investigations (1986 – 2002)

Envirodyne Engineers Inc. (Envirodyne) conducted a Contamination Evaluation Study between December 1986 and April 1987 at the request of USACE, following the Defense Environmental Restoration Account directive. This study included a records review, site inspection, installation of four groundwater monitoring wells (RG-01 through RG-03, near the MBA, and RG-04, near the fuel depot), groundwater sampling, surface water sampling from six missile silos, and the collection of near surface soil samples (Envirodyne 1987). The field investigation included the discovery of rubble, tar, sludge, oil, debris, two drums, organic solvents or petroleum distillates floating in a missile silo, oil sheen, a fiber drum, antifreeze container, several 12-volt batteries, twelve underground storage tanks (USTs), mounds of unknown origin, an oil stained transformer pad and rubber asphalt joint sealer cans (20). Benzene and

toluene were slightly above detection limits. Trichloroethene (TCE) was detected in RG-03, at 3 micrograms (µg)/liter (L). It was located approximately 140 feet southeast of the wastewater lagoon. Soil generated during drilling investigations was not considered hazardous by the Hazardous Materials Section of the Michigan Department of Natural Resources. Groundwater resampling was recommended for further study of minor impact. A summary of the findings is presented below.

- All metals concentrations in groundwater samples were found to be below State of Michigan groundwater protection criteria.
- TCE was detected in a groundwater sample collected from RG-03, at 3.0 µg/L.
- Toluene was detected in the groundwater sample collected at RG-04 at 1.9 µg/L, slightly higher than the lower detection limit, but could have been due to the deuterated toluene used in the surrogate spike (Method 8240).
- Low levels of barium and lead were detected in surface water within most of the silos. Chromium was detected just above the detection limit in one silo (location not provided). The concentrations of the metals found in the silo water samples were below all applicable drinking water standards.
- Water from six of the 28 missile silos was analyzed for petroleum hydrocarbons (method 418.1) and purgeable halocarbons and aromatics (method 8240 plus). Results from all six locations were 5 milligrams (mg)/L or less petroleum hydrocarbons, except sample RG-4 (silo 10), which contained 1810 mg/L petroleum hydrocarbons. The purgeable halocarbons and aromatics analysis results for this same location showed 6.0 µg/L benzene, 20.4 µg/L methylene chloride, and 1.2 µg/L toluene. Two drums and yellow oily layer were observed in this silo by Envirodyne in 1986-87.
- Arsenic, barium, and chromium were detected at low levels and lead was detected at 12.4 µg/kg in the soil sample from the former wastewater treatment lagoon. It was determined that the lagoon and adjacent denuded area did not appear to be a source of significant metals contamination.
- Comparatively low levels of petroleum hydrocarbons were detected at eight surface soil sampling locations. A high concentration (8530 µg/L) of petroleum hydrocarbons was found near the transformer pad located south of the former Composite Building. It was concluded that there was no evidence that this soil contamination had affected downgradient groundwater concentrations.
- Polychlorinated biphenyls (PCBs) were not detected in samples collected at the transformer pad, or in any other soil or water samples.
- There was no evidence that any USTs were leaking petroleum hydrocarbons into the groundwater system.
- Responsibility for the oil spill at the transformer pad was not known.
- Responsibility for soil impact at the well RG-03 location (1.8 mg/L) may be due to DoD's operation of the wastewater treatment plant and wastewater lagoon at the MBA site. Possible UST leakage or spillage was also suspected by Envirodyne.
- Petroleum hydrocarbon and paint contamination in the silos was not believed to be DoD's, as it appeared that the sources of these contaminants were placed there after DoD activities ceased.

Anderson Excavating and Wrecking Company was contracted by USACE, Detroit District for a demolition project in 1987. Field activities were substantially completed by November 1988. Details obtained from "Case Study" by Charles Woodruff and Ronald Pearce (1989) included:

- Removal of the remaining buildings, which consisted of two masonry block and structural steel constructions that were approximately 26,000 square feet and 6000 square feet of floor area,

respectively; and two small masonry block buildings of approximately 190 square feet and 260 square feet of floor area, respectively.

- Removal of 14 USTs and their contents (eight USTs were associated with the Fuel Depot Area and six were associated with the MBA).
- Removal of approximately 600 cubic yards of oil soaked soils.
- Removal of asbestos containing materials such as floor tiles, pipe insulation, and boiler room equipment insulation.
- Removal of miscellaneous debris.
- Removal or covering of several exposed building slabs with two feet of earth.
- Filling, leveling, and concrete capping of debris in the silos. The silo areas were covered with two feet of earth.
- Fertilizing, seeding, and mulching disturbed and filled areas with a blend of grasses recommended by the FS.

The USTs originally held various petroleum products including gasoline, boiler fuel oil, diesel oil, and aviation gasoline. At the time of removal the tank contents consisted primarily of fuel oil sludges, gasoline, and fuel/water mixtures.

The USTs were removed during July and August 1988. On removal it was evident that spillage and/or leakage had occurred. Samples analyzed from the excavations showed petroleum hydrocarbon levels as high as 2310 mg/kilogram (kg) (worst case), with the remainder ranging from less than 50 mg/kg to 650 mg/kg.

IT Corp. conducted a Remedial Investigation in 1990 (Stage 1) and 1991 (Stage 2) to determine if past activities at the site had contributed to groundwater and soil contamination, and if previous investigations adequately addressed this potential contamination. Figures showing the locations of the USTs, transformer pad, sludge drying bed, and wastewater treatment lagoon associated with the MBA are provided in Envirodyne 1987. A figure showing the locations of the USTs associated with the Fuel Depot Area are provided in IT Corp. 1991.

The Stage 1 investigation focused on seven sites: (1) USTs C1/C2, (2) UST C4, (3) UST B1, (4) transformer pad, (5) background boring, (6) sludge drying bed, and (7) wastewater treatment lagoon. The Scope of Work (SOW, USACE 2009) included:

- The installation of eight monitoring wells (MW-05 through MW-12).
- Groundwater sampling at 12 monitoring wells (RG-01 through MW-12).
- Slug testing of MW-05 through MW-12.
- Advancement, sampling, and analysis (51 samples) of eight soil borings (USTs C1, C2, C4, and B1, transformer pad, sludge drying bed, wastewater treatment lagoon, background location).
- Collection of 16 geotechnical samples.
- A geophysical survey of a potential landfill area.

The Stage 2 investigation focused on five sites: (1) transformer pad, (2) background boring, (3) sludge drying bed, (4) wastewater treatment lagoon, and (5) fuel depot area. The SOW included:

- The installation of three monitoring wells (MW-13 through MW-15).

- Groundwater sampling at six monitoring wells (RG-01, RG-03, MW-08, MW-13, MW-14, MW-15).
- Slug testing of MW-13, MW-14, and MW-15.
- Advancement, sampling, and analysis (44 samples) of seven soil borings (transformer pad, background boring, downgradient of sludge drying bed, wastewater treatment lagoon, fuel depot area).
- Collection of 19 geotechnical samples.

Of the nine areas or sites of investigation, only three, UST C1/C2, the sludge drying bed, and the wastewater treatment lagoon were carried into a Baseline Risk Assessment and were deemed to have potential future concerns.

- At depth, soils of the sludge drying bed contained levels of chromium and lead that were above established state and site background levels. In the monitoring well located downgradient of the sludge drying bed (MW-14), lead was again detected at concentrations (9.5 µg/L in primary sample and 11 µg/L in duplicate) above the Type B cleanup criteria established by the State. Michigan's Type B cleanup criteria were developed assuming residential land use and a 1×10^{-6} excess lifetime cancer risk level for each carcinogenic compound.
- At depth, soils of the wastewater treatment lagoon contained levels of chromium that were above established state and site background levels. Pentachlorophenol (PCP) was also detected in the soil boring. At the time of this investigation, there was no established cleanup level for PCP by the State of Michigan. PCP was not detected in groundwater.
- Soil at UST C1/C2 also contained levels of PCP. PCP was not detected in groundwater.
- All other compounds detected at other sites in groundwater and soil were eliminated as potential contaminants of concern using Michigan Act 307's Type A, B, and C criteria.

In 1987 the USACE Detroit District contracted with Anderson Excavating and Wrecking Company to remove 14 USTs at the site and backfill the abandoned missile silos. Removal of the USTs and associated soil sampling for total recoverable petroleum hydrocarbons was performed July 1988 to August 1988. The demolition and removal work was completed in 1988. This work is summarized in a USACE Memorandum for Record, dated January 17, 1989 (USACE, as cited in Earth Tech 2005).

BCM Engineers, Planners, Scientists and Laboratory Services (BCM) conducted a soil probe investigation of the site focusing on the areas around the former UST locations in 1996. This investigation included 113 soil borings and 200 soil samples taken from, in, and around the former UST locations. Soil samples were analyzed for benzene, toluene, ethylbenzene, xylenes (BTEX) and poly-nuclear aromatics (PNAs). Five soil samples were also analyzed for halogenated VOCs. Two groundwater samples were collected and analyzed for BTEX, PNAs, and lead (BCM 1996).

Sverdrup Environmental, Inc (Sverdrup) conducted a supplemental RI at the site in 1996 and 1997. This investigation included installation of soil borings and sampling of existing monitoring wells. Elevated concentrations of lead were found during the 1996 groundwater sampling. As a result, the monitoring wells were redeveloped and sampled in 1997. Elevated lead was not detected in the 1997 round of sampling. The 1996 report was edited to include the 1997 data [Neither the title of the report, nor the date was changed (Sverdrup, as cited in Earth Tech 2005)].

Barr completed a review of all information pertaining to the site in 2002 (Barr, as cited in Earth Tech 2005). The review was on behalf of the USFS and addressed complaints by local organizations. Local organizations believe that certain materials were buried or spilled during demolition. Mr. James

Traynor (a worker at the site during demolition) added credence to the locals concern with his account of what occurred during demolition activities. The Barr report addressed these concerns and followed up with an interview with Mr. Traynor. The investigation revealed that documentation shows the materials of concern (hydrocarbon waste, asbestos, and PCBs), were properly dealt with or removed and properly disposed (Barr 2002). The report further suggests that specifically investigating Mr. Traynor's claims would help to refute or verify concerns of debris being buried in those specific areas. The Barr report also addressed the sufficiency of the previous investigations. The report suggested that the subsurface was properly delineated, both vertically and laterally and it indicated the existence of groundwater data gaps. The report mentioned that it was unclear whether or not the existing wells were downgradient of former USTs B-1, C-1, C-2, C-3, or of the former wastewater treatment lagoon. USTs C-1, C-2, and C-3 were located northwest, in an area formerly called the fuel depot area. The UST B-1 and the waste water treatment lagoon are located in the former MBA (Earth Tech 2005). A more detailed summary of the Barr report's conclusions, including a summary of the records document review and groundwater and soils data, may be found in the Earth Tech report (2003 and 2005).

Earth Tech conducted a Site Investigation at the site in phases from September 2003 to November 2004. The 2003 investigation was designed to address the aforementioned citizen concerns regarding improper disposal practices that may have occurred at the site, and to evaluate the site for potential closure. The 2004 Earth Tech investigation was designed to evaluate the extent of TCE contamination in the MBA. This investigation included the installation of soil borings, redevelopment of existing wells, a geophysics survey of the former borrow pit area, the installation and development of new wells, and groundwater sampling. The following information and data was compiled from Earth Tech 2005.

2003 Activities

- An electromagnetic survey was conducted and two soil borings were drilled in the borrow pit areas. Three soil borings were drilled in the MBA to address the prior concerns regarding improper dumping during the demolition project. All borings were advanced to a depth of 50 feet below ground surface (bgs) or to the potentiometric surface, whichever was encountered first. Soil samples were collected in two feet intervals on 10 feet centers. Results of the investigation did not indicate the presence of contamination.
- Three additional monitoring wells [MW-16 (Fuel Depot Area), MW-17 (associated with location of former UST B1), MW-18 (associated with location of former USTs C2 and C3)] were installed and sampled to address data gaps. During the 2003 investigation, TCE was the only VOC detected in groundwater. It was detected in MW-18 at 1.6 µg/L, which is below the MDNRE Part 201 drinking water criterion of 5 µg/L.
- All existing monitoring wells were redeveloped and re-sampled due to previous sampling events, which indicated a potential lead problem believed to be a result of the conditions of the wells.
- All analytical results for lead were below MDNRE Part 201 criteria. Carbon disulfide was detected in five of the wells in concentrations ranging from 2.7 µg/L in RG-04 to 18 µg/L in MW-08. TCE was detected in MW-18 at 1.6 µg/L and MW-08 at 14 µg/L. The detection of TCE in MW-08 was above the MDNRE Part 201 Residential and Commercial I Drinking Water Criteria (RCDWC) of 5 µg/L. No semi-volatile organic compounds (SVOCs) were detected in any samples collected. Metals that were observed in the non-filtered samples included: aluminum, barium, calcium, chromium, cobalt, copper, iron, lead, magnesium, manganese, nickel, potassium, selenium, sodium, thallium, vanadium, and zinc. Of those analytes, aluminum, detected in MW-08 at 454 µg/L, exceeded the MDNRE Part 201 residential aesthetic drinking water criterion of 50 µg/L, and the health based drinking water

criterion of 200 µg/L; and iron, detected in MW-05 at 1440 µg/L, exceeded the MDNRE Part 201 residential aesthetic drinking water criterion of 300. µg/L

2004 Activities

- Groundwater samples were collected from the same wells sampled during the October 2003 event. TCE was detected in MW-18 and MW-08, at 0.56 µg/L and 19 µg/L, respectively. Chloromethane was detected in RG-02. The detection of TCE in MW-08 was above the MDNRE Part 201 RCDWC of 5 µg/L. No SVOCs were detected in any samples collected. Metals that were observed in the analytical results (non-filtered) included: aluminum, antimony, arsenic, barium, beryllium, calcium, chromium, cobalt, copper, iron, lead, magnesium, manganese, nickel, potassium, sodium, thallium, zinc, and mercury. Of those, only aluminum (detected in MW-09 at 62.9 µg/L) exceeded MDNRE Part 201 RCDWC level of 50 µg/L.
- Five soil borings (the former Composite Building, sludge drying bed, and wastewater treatment plant lagoon) were advanced to a depth of 80 feet bgs in the MBA. They were investigated because those areas were deemed most likely to be a source of TCE contamination in the groundwater. They were also investigated to determine the optimum placement for additional wells. Soil samples were collected at 10, 20, and 40 feet bgs. Groundwater samples were collected at 70 and 80 feet bgs. The soil samples indicated no evidence of a source area for the TCE. The groundwater data, however, indicated low concentrations of TCE in four of the borings.
- Based on the results of the soil boring investigations, four new monitoring wells (MW-19, MW-20, MW-21, and MW-22) were installed to depths of approximately 90 feet bgs.
- MW-07, MW-08, MW-14, and MW-18 were sampled for VOCs. MW-19, MW-20, MW-21, and MW-22 were sampled for VOCs, SVOCs, and metals. TCE was detected in MW-08 (19 µg/L), MW-18 (0.8 µg/L), MW-19 (4.4 µg/L), and MW-20 (0.52 µg/L). 1,1,1-trichloroethane was detected in MW-19 (0.46 µg/L), MW-20 (0.74 µg/L), and MW-22 (0.32 µg/L). Chloromethane was detected in MW-21 at 0.96 µg/L. Tetrachloroethylene was detected in MW-19 (0.44 µg/L), MW-20 (0.54 µg/L), and MW-22 (0.69 µg/L). Toluene was detected in MW-19 (0.79 µg/L), MW-20 (0.4 µg/L), and MW-21 (0.44 µg/L). Of these, only TCE detected in MW-08 exceeded the MDNRE Part 201 RCDWC level of 5 µg/L. No SVOCs were detected in any samples collected. Metals that were observed included arsenic, barium, cadmium, chromium, lead, and selenium. Of those, only lead detected in the non-filtered samples from MW-20 (9 µg/L), MW-21 (8.8 µg/L), and MW-22 (94.8 µg/L) exceeded the MDNRE Part 201 RCDWC level of 4 µg/L. All filtered samples were below MDNRE Part 201 criteria. Lead concentrations in the redeveloped wells were below MDNRE Part 201 criteria.
- TCE was detected in MW-08 six times during the nine sampling events for which historical data are available: September 1990 (3 µg/L), July 1991 (3 µg/L), February 2002 (11 µg/L), October 2003 (14 µg/L), May 2004 (19 µg/L) and November 2004 (19 µg/L) (Earth Tech 2005).

2.3.2 GEO 2007

GEO conducted a Phase III Site Investigation at the Raco AAF from June 2007 to August 2007 to support the recommended closure of the site. Tasks included sampling of surface water and groundwater, a geophysical survey and a radiological survey. Groundwater was sampled (June 2007 and August 2007) from 18 monitoring wells in and around the former fuel depot area and the MBA. June 2007 samples were analyzed for VOCs and perchlorate and the August 2007 samples were analyzed for VOCs only. The surface water sampling location is adjacent to the Northeast-Southwest runway and was identified as an Area of Concern by Hiawatha National Forest personnel. In a review of historical facility drawings, the area appeared to be a subsidence associated with a former water treatment facility. Surface water samples

were collected during the June 2007 event and analyzed for VOCs, SVOCs, pesticides, PCBs, and metals. A geophysical survey was performed in an area of a suspected former dump area. A radiological survey was performed in the area of confluence of former catch basins. The following data was collected from GEO's Report of Findings, Raco AAF, Environmental Site Investigation (GEO 2008).

Groundwater Investigation - June 2007 - Based on previous investigations (MW-08 at 0.8 µg/L, MW-19 at 4.4 µg/L TCE; Earth Tech 2005 Section 2.3.2), MW-08 and MW-19 were anticipated to yield impacted groundwater. TCE concentrations in 2007 were 18 µg/L and 19 µg/L at MW-08 in the primary and duplicate samples and 32 µg/L at MW-19 in the primary sample. Traces of TCE were reported from MW-18 (0.82J µg/L) and RG-02 (0.62J µg/L). However, J-coded results are considered unreliable. The 2007 results for MW-08 and MW-19 were steady to higher than 2004 results and exceeded the MDNRE and U.S. Environmental Protection Agency (USEPA) potable water requirement of 5 µg/L.

Groundwater Investigation - August 2007 - Impacted wells were sampled in duplicate. TCE results were similar to previous samplings [MW-19 at 33 µg/L (primary) and 32 µg/L (duplicate), and MW-08 at 12 µg/L, in both samplings]. Both wells exceeded the MDNRE requirement of 5 µg/L. At MW-18, TCE was 0.6J µg/L and at MW-20 TCE was 0.42J µg/L. Results for MW-18 were consistent with June 2007 data. MW-20 was below detection limit (June 2007) and RG-02 (trace of TCE, June 2007) was below detection limit in the August sampling event.

MW-08 and MW-19 appear to be downgradient of the former wastewater treatment lagoon (Figure 2-2). TCE was detected in MW-08 eight times during the prior 11 sampling events: September 1990 (3 µg/L), July 1991 (3 µg/L), February 2002 (11 µg/L), October 2003 (14 µg/L), May 2004 (19 µg/L), November 2004 (19 µg/L), June 2007 (19 µg/L), and August 2007 (12 µg/L). TCE had been detected in MW-19 in each of the three sampling events since its installation: November 2004 (4.4 µg/L), June 2007 (32 µg/L), and August 2007 (33 µg/L).

Surface Water Investigation – June 2007 – VOCs from a single sample were below detection limits. Metals were detected [lead (1.8B µg/L) and zinc (14.6B µg/L)] in a single sample and were also present in the laboratory method blank (B coded). The only other inorganics reported were commonly found soil elements such as calcium, magnesium, barium, iron, and potassium. Concentrations of these elements were within typical ranges for natural waters. SVOCs were analyzed on the single sample and were not reported. Pesticides/PCBs were not detected. It was concluded that the surface water sample location, the depression noted by Hiawatha National Forest, does not contain environmentally impacted water.

3. FIELD INVESTIGATION

This section of the Report of Findings describes the field procedures used during implementation of the 2009 RI/FS activities. These activities focus on the VAP of the TCE groundwater contaminant plume (based on previous investigations, TCE appears to be the primary contaminant of concern at the Raco MBA), the installation of five groundwater monitoring wells, one round of groundwater sampling of existing and new monitoring wells, one round of groundwater sampling from four existing water supply wells, and a one-mile radius well survey. Field activities are summarized in Sections 3.1 through 3.8 and include:

- VAP of soil and groundwater (Section 3.1).
- Monitoring well installation and development (Section 3.2).
- Groundwater sampling from monitoring wells (Section 3.3).
- Groundwater sampling from existing water supply wells (Section 3.4).
- Well survey (Section 3.5).
- Sample custody, handling, and holding times (Section 3.7).
- Management of investigation-derived waste [IDW (Section 3.8)].

3.1 VERTICAL AQUIFER PROFILING

VAP involving the collection of continuous soil samples for visual classification and headspace screening and groundwater sample collection for analysis by an on-site mobile laboratory was used to assist in the delineation of the horizontal and vertical extent of VOCs (primarily TCE) at the former MBA. The results of the VAP investigation were then used to aid in the selection of permanent monitoring wells. VAP borings were drilled sequentially from VSB-01 to VSB-10 using rotosonic drilling methods (Figure 1-3). Five of the VAP borings were completed with monitoring wells with the remaining five VAP borings backfilled with natural formation collapse and bentonite grout/chips. VAP boring and monitoring well completion logs are located in Appendix B of this report. Trace Analytical Laboratories served as the primary and on-site field screening laboratory. CT Laboratories was used to provide quality assurance (QA) to VOC confirmation analysis of groundwater samples.

3.1.1 Soil Investigation

VAP borings (VSB-01, VSB-03 through VSB-08, and VSB-10) were continuously soil sampled from the ground surface to total depth, with groundwater samples collected on 10 feet intervals once the saturated zone was encountered. Rotosonic drilling allows for the collection of continuous soil cores in 10 feet intervals. Soil from the drilling rods was released every 10 feet and placed in 10 feet long clear plastic disposable tubes that were handled by the drilling crew and then moved by GEO personnel to a holding area. The soil tubes presented a correlated lithologic view of the formation geology. The soil cores were examined by field personnel and allowed to rest for approximately five minutes. Slits were cut into the plastic tubes at one foot intervals and a calibrated 10.6 electron-volt (eV) photoionization detector (PID) sensor was used to scan the headspace for VOCs in cores collected above the saturated zone. Moisture resulted in unreliable PID soil headspace readings below the water table. Vibrational drilling produces warm soil samples caused by friction as the casing moves through soil above the groundwater table. Condensation generated by temperature differentials created false positive PID readings.

VSB-07 was advanced immediately downgradient of the former UST C-4 during the VAP investigation to determine if the former UST was a potential source for the TCE plume. PID

measurements indicated a VOC concentration of 83 parts per million at 27 feet bgs. 1,2,3-trimethylbenzene (3.41 µg/kg), 1,3,5-trimethylbenzene (9.08 µg/kg), acetone (2.48 µg/kg), sec-butylbenzene (1.15 µg/kg), p-isopropyltoluene (6.73 µg/kg), and trichloroethene (0.92 µg/kg) were detected within the soil sample by the mobile lab. Former UST C-4 contained a heating oil UST that had been removed in 1987. At that time, total petroleum hydrocarbons were detected (210 mg/kg) from a soil sample collected at the bottom of the tank pit and further soil investigation was recommended to determine compliance with Michigan Act 307 type B criteria for total petroleum hydrocarbons (IT Corp. 1991). Based on available information, UST C-4 does not appear to be a source for the TCE plume.

Soil classification was primarily of well-sorted, fine to very fine grained, tan to light brown sands with occasional silts and gravels. Based on MDNRE recommendations, lack of visual staining, consistent non-detect PID readings and mobile laboratory analysis of the single soil sample at VSB-07 (26 feet bgs), soil samples were not submitted to the fixed base laboratory for analysis.

3.1.2 Groundwater Investigation

Boring VSB-02 was drilled without sampling to 120 feet bgs and groundwater samples were collected using modified low-flow sampling techniques upward in 10 foot intervals to the top of water table. Boring VSB-09 was blind drilled to 67 feet, where groundwater samples were collected from 67 to 87 feet bgs. Boring VSB-01 was conceived as a background boring, but was requested by MDNRE to be abandoned after reaching 58 feet bgs. Subsequent boring locations and elevations are listed in Table 3-1. Elevations are from ground surface or the top of the concrete well pad, if converted to a monitoring well. See Appendix C for survey detail.

Table 3-1. Boring locations and elevations

Boring Number	Northing[1]	Easting[1]	Elevation (feet amsl)[2]
VSB01	578413.1	26800550.8	902.7
VSB02	578507.0	26801343.9	904.8
VSB03/MW-23	578527.876	26801410.690	906.6
VSB04/MW-24	578443.124	26801515.552	905.4
VSB05	578552.6	26801194.0	904.3
VSB06/MW-25	578579.614	26801602.395	905.5
VSB07	578421.0	26801014.3	905.1
VSB08/MW-26	578518.488	26801291.213	903.5
VSB09	578495.0	26801163.6	904.9
VSB10/MW-27	578488.993	26801675.609	903.6

[1] Horizontal coordinates are based on the Michigan State Plane Coordinate System (North Zone 2111).
[2] Elevations are based on the North American Vertical Datum 1929 (NAVD 29).
amsl = above mean sea level

Once groundwater was encountered within the VAP borings, a screen-point sampler was advanced and used to isolate each interval for groundwater collection every 10 feet using a bladder pump. A representation of the sampler used, starting with VSB-03, is provided in Figure 3-1. Prior to implementation of the sampling point demonstrated in Figure 3-1, a 10 feet long drive point screen was used to collect the groundwater samples. A stainless steel bailer was used to collect groundwater samples from the top interval (once groundwater was encountered) due to limited groundwater recharge/availability experienced at this interval. A stainless steel bailer was also used for several depth intervals at VSB-10 due to very fine-grained sand clogging the bladder pump screen. The bailer was cleaned with phosphate-free detergent, then steam-cleaned prior to each use. Equipment blanks (EBs) were collected off the bailer at regular intervals to detect the potential for cross contamination. The screen point sampler was used with “push ahead” or “drive ahead” sampling technique in which drilling rods

inside the casing are pushed ahead of the bottom of the casing string and allowed for groundwater sampling to be performed 20 feet ahead of the outer drive casing. VSB-02 was an exception, where the outer casing was driven to 120 feet bgs and VAP sampling occurred in 10 feet intervals as the outer casing was retracted. The push ahead sampling point is retracted one to five inches to permit groundwater intrusion inside the sample point. The bladder pump is then lowered into the inner casing and groundwater is purged and sampled via modified low-flow techniques to retrieve the groundwater sample at each designated 10 foot interval within the water column.

Using the sampling point depicted in Figure 3-1, approximately one to two gallons of groundwater was pumped from each interval to allow evacuation of stagnant water (from previous sample) inside the bladder pump and tubing prior to groundwater sample collection. Use of the 10 foot drive point screen required the purging of the volume of water used when advancing the outer casing through the desired sampling interval, approximately 50 gallons.

Standard water quality field parameters (i.e., temperature, pH, specific conductance) were also monitored at three minute intervals utilizing a calibrated Hydrolab® prior to groundwater sample collection. Parameters were considered stable when variations in temperature, pH, and specific conductance did not exceed ± 0.5 degrees Celsius (°C), ± 0.1 Standard Unit (SU), or ± 0.3%, respectively. All data were recorded in the field logbook or field data sheets (tabulated in Appendix C). After parameters stabilized, the field parameters [pH, dissolved oxygen (DO), oxygen reduction potential (ORP), temperature, specific conductance, turbidity] were measured. The Hydrolab® is equipped with a flow cell, pH, DO, ORP, temperature, specific conductance, and turbidity probes (this methodology is referred to as "Hydrolab® Procedures" within this document). The specifications on the probes are as follows:

- pH: Range: 0 to 14 SU; Accuracy: ± 0.2 units; Resolution: 0.01 units.
- DO: Range: 0 to 50 mg/L; Accuracy: ± 0.2 mg/L for 20 mg/L; Resolution: 0.01 mg/L.
- ORP: Range: -999 to 999 milliVolts (mV); Accuracy: ± 20 mV; Resolution: 1 mV.
- Temperature: Range: -5 ºC to 50 ºC; Accuracy: ± 0.2 ºC; Resolution: 0.01 ºC.
- Specific conductance: Range: 0 to 100 milliSiemens per cm; Accuracy: ± 1% of reading ± 1 count; Resolution 4 digits.
- Turbidity: Range: 0 to 1000 Nephelometric Turbidity Units (NTU); Accuracy: ± 5% of reading ± 1 NTU; Resolution: 0.1 NTU < 100 NTU/1 NTU ≥ 100 NTU.

The VAP sampling method combined with rotosonic vibrational drilling provided precise sampling locations and well installation. Trace Analytical's mobile laboratory provided 30 minute turnaround (approximate) of groundwater VOC analysis. Either two successive non-detect intervals below the TCE plume, or MDNRE directive, delineated the vertical extent of the VAP investigation. Table 3-2 provides a summary of the samples collected during the VAP investigation.

Table 3-2. Summary of groundwater samples during the VAP investigation

Sampling Procedure	Analytes/Method	Number of field samples		Field duplicate
		Mobile laboratory	Fixed-base laboratory[1]	Mobile laboratory
Groundwater Modified low-flow sampling				
40 mL VOA vials	VOCs/8260B	76	18	6

[1] Samples submitted to fixed-based laboratory analyzed by USEPA Method 8260B LL.
Equipment blanks and trip blanks not included in this table. See Section 3.6.2 for more details regarding field Quality Control (QC) samples, including trip and equipment blanks.
Specific analytes included for analysis by the fixed-base laboratory with associated reporting/detection limits can be found in Table 3-6.
mL-milliliters, VOA-volatile organic analysis, VOCs-volatile organic compounds

Four borings (VSB-01, VSB-05, VSB-07 and VSB-09) were placed upgradient (west) of the former wastewater lagoon and the highest readings were below RCDWC. Six borings (VSB-02, VSB-03, VSB-04 VSB-06 VSB-08 and VSB-10) were placed downgradient (east) of the former wastewater lagoon (Figure 1-3). Total depth was determined based on two successive groundwater samples exhibiting no TCE or observed decreasing trends. TCE was encountered in groundwater within VSB-09 at 67 feet bgs (shallowest zone where TCE was encountered during the VAP investigation) at 2 µg/L, which is below MDNRE criteria. It is expected that this concentration represents minimal dispersion in an upgradient direction. Further, the groundwater sample collected from VSB-08 (77 feet bgs) encountered the highest concentration of TCE at the MBA (67 µg/L). Groundwater contamination was identified at 17 feet below the top of the water table at VSB-08, which was located immediately downgradient of the former wastewater lagoon, indicating that the lagoon area or the vicinity within 150 feet west of VSB-08 may have been the source of the TCE groundwater contaminant plume. However, no contaminated soil was identified near the surface, or within the vadose zone, at any of the boring locations, and no concentrated source area was identified within the shallow groundwater at and of the boring locations. It was detected at MW-18 at 1.6 µg/L, which is well below the MDNRE Part 201 drinking water criterion of 5 µg/L.

The TCE impact plume (Figure 3-2, TCE plume cross section) appears to flow from the former wastewater lagoon area, migrating downwards towards the east/southeast. Table 3-3 provides a summary of TCE concentrations encountered during the VAP investigation. Mobile laboratory data reports are provided in Appendix E.

The highest on-site analytical results for TCE in each individual downgradient boring exceeded RCDWC, with the exception of VSB-06.

The TCE impact plume (Figure 3-2) appears to flow from the former wastewater lagoon area, migrating downwards towards the east/southeast. The highest concentrations of TCE encountered immediately downgradient from the former wastewater lagoon were found (VSB-08 / MW-26) at 77 feet bgs. At the eastern extent of this investigation (VSB-10 / MW-27), the highest TCE concentration was identified at 127 feet bgs. The horizontal extent of the TCE plume from the VAP investigation data, not yet fully delineated, is depicted in Figure 3-3. Table 3-3 displays the groundwater sampling results by interval from analysis performed by the on-site mobile laboratory.

The on-site mobile laboratory results were reproduced and confirmed by the fixed-base laboratory. The fixed-based laboratory results were within 30% of mobile-based laboratory results.

Table 3-3. TCE concentrations in groundwater encountered during the VAP investigation

Boring No.	Depth (feet bgs)	Field lab TCE result (µg/L)	Analytical lab TCE result (µg/L)
VSB02	47-57	ND	
	57-67	ND	
	67-77	3.3	
	77-87	1.8	
	87-97	6.2	7.9
	97-107	ND	
	107-117	ND	
	117-127	ND	<0.05
VSB03 – MW-23	57	ND	
	67	ND	
	77	1.1	
	87	5	
	97	60	77
	107	9.3	
	117	2.1	
	127	ND	0.70
VSB04 – MW-24	57	ND	
	67	ND	
	77	ND	
	87	3.3	
	97	12	14
	107	9.2	
	117	ND	0.17
VSB05	57	ND	
	67	ND	
	77	ND	
	87	ND	0.28
	97	ND	
	107	ND	<0.050
	117	ND	
VSB06 – MW-25	57	ND	
	67	ND	
	77	ND	
	87	ND	
	97	ND	<0.050
	107	ND	
	117	ND	<0.050
VSB07	57	ND	0.17
	67	ND	
	77	ND	
	87	ND	
	97	ND	<0.050
	107	ND	

Table 3-3 (continued). TCE concentrations in groundwater encountered during the VAP investigation

Boring No.	Depth (feet bgs)	Field lab TCE result (µg/L)	Analytical lab TCE result (µg/L)
VSB08 – MW-26	57	ND	
	67	36	
	77	67	65
	87	59	
	97	4.7	
	107	ND	
	117	ND	<0.050
VSB09	67	2	1.7
	77	ND	
	87	ND	<0.050
VSB10 – MW-27	77	ND	
	87	ND	
	97	ND	
	107	1.9	
	117	32	
	127	61	55
	137	ND	
	147	2.4	
	157	1.3	1.1

TCE concentrations based on Trace Analytical's mobile laboratory results.
ND-non-detect

3.2 MONITORING WELL INSTALLATION AND DEVELOPMENT

Five new monitoring wells (MW-23 through MW-27) were installed and constructed with two inch diameter polyvinyl chloride (PVC) risers and 0.010 inch slotted stainless steel screens (monitoring well completion diagrams are provided in Appendix B). Well construction details are provided in Table 3-4. Locations of the new monitoring wells were determined by the VAP investigation (downgradient from the former wastewater lagoon, highest analytical result bisected by 10 foot screen). The wells were installed inside the six inch diameter casing to the target depth identified during the VAP. The risers and screens were lowered through the casing to the target depth and filter pack material (#5 sand) was placed by gravity methods inside the casing around the well screen. The casing was then vibrated as it was removed to compact the filter pack. The primary filter pack was extended approximately two feet above the top of the screen. A two foot thick bentonite seal of 0.25-inch bentonite pellets was placed above the primary filter pack by gravity methods and was naturally hydrated by the surrounding aquifer. The remainder of the borehole was allowed to naturally collapse when possible, and then grouted to surface with a high solids bentonite grout. Bentonite chips were added and hydrated to account for settling and dispersion of the grout. Surface completion with concrete occurred within two feet of the ground surface. Surface completion included well pad placement with a stick-up well protector surrounded by four steel bollards filled with concrete (well protectors).

The monitoring wells were developed by surging with compressed air. This process involves lowering an air line attached to a small diameter pipe string (typically one inch) to the bottom of the well. Air is injected into the well so that the water and fine-grained sediments are forced through the well screen and evacuated out of the well through the pipe string and into a polytank for disposal. A minimum of three to four well volumes were evacuated from the monitoring wells (Table 3-4), until fine-grained sediments were no longer visible within the purged water. Water level elevations and total well depths can be found in Table 3-5.

Table 3-4. Well construction details

Well Designation	Date Installed	Installed by	Total well depth (feet)[1]	Casing length (feet)	Screen length (feet)	Northing (feet)[2]	Easting (feet)[2]	Surface elevation (feet amsl)[3]	Top of Casing elevation (feet amsl)[3]	Top of Screen elevation (feet amsl)[3]	Bottom of well elevation (feet amsl)	Approximate volume of water removed during development (gallons)
MW-08	9/22/1990	IT Corp.	75.65	65.65	10.0	578405.024	26801309.745	904.10	905.59	839.94	829.94	-
MW-14	6/30/1991	IT Corp.	58.87	48.47	10.4	578649.083	26801352.033	907.98	909.52	861.05	850.65	-
MW-18	9/17/2003	Earth Tech	59.02	49.02	10.0	578276.528	26801125.397	905.68	908.11	859.09	849.09	-
MW-19	10/18/2004	Earth Tech	93.93	83.93	10.0	578489.023	26801347.221	905.26	907.60	823.67	813.67	-
MW-20	10/17/2004	Earth Tech	89.00	79.00	10.0	578374.088	26801399.585	907.64	909.85	830.85	820.85	-
MW-21	10/19/2004	Earth Tech	93.95	83.95	10.0	578636.866	26801288.259	903.20	905.58	821.63	811.63	-
MW-22	10/14/2004	Earth Tech	91.63	81.63	10.0	578284.260	26801140.626	905.47	907.72	826.09	816.09	-
MW-23	9/26/2009	GEO	102.30	92.30	10.0	578527.876	26801410.690	906.6	909.33	817.03	807.03	110
MW-24	9/30/2009	GEO	102.30	92.30	10.0	578443.124	26801515.552	905.4	908.01	815.71	805.71	120
MW-25	10/6/2009	GEO	106.52	96.52	10.0	578579.614	26801602.395	905.5	908.19	811.67	801.67	225
MW-26	10/9/2009	GEO	89.92	79.92	10.0	578518.488	26801291.213	903.5	906.25	826.33	816.33	70
MW-27	10/10/2009	GEO	135.96	125.96	10.0	578488.993	26801675.609	903.6	906.42	783.18	773.18	240

[1] Total well depth measured from top of casing.

[2] Horizontal coordinates are based on the Michigan State Plane Coordinate System. (North Zone 2111)

[3] Elevations are based on the North American Vertical Datum 1929 (NAVD 29).

amsl—above mean sea level

Based on data collected during the VAP portion of the RI/FS activities, the approximate extents of the TCE plume are 67 feet bgs (highest vertical extent to the west) to 127 feet bgs (lowest vertical extent to the east), with horizontal measurements of 450 feet west to east, 68 feet north, 75 feet south, and zero feet west of the former wastewater lagoon location.

3.3 GROUNDWATER SAMPLING EVENT – OCTOBER 28 - 29, 2009

Groundwater samples were collected from seven existing monitoring wells (MW-08, MW-14, MW-18, MW-19, MW-20, MW-21, and MW-22) and the five new monitoring wells (MW-23 through MW-27) during the initial sampling event conducted on October 28 to October 29, 2009; which was eighteen days after the installation of the five new monitoring wells (September 26 to October 10, 2009). Water level elevations and total depths can be found in Table 3-5.

Dedicated PVC bladder pumps with Teflon bladders and 3/8-inch Teflon lined polyethylene tubing were placed in all sampled wells during the 2007 GEO investigation. Identical bladder pumps and tubing were installed within MW-23, MW-24, MW-25, MW-26, and MW-27 on October 10, 2009, after the wells were developed. Samples were collected through the dedicated (well-specific) bladder pumps and tubing using modified low-flow USEPA sampling protocols. Table 3-6 shows the number and type of groundwater samples collected during the October 2009 sampling event.

Table 3-5. Monitoring well depths and water levels

Well Number	Total Depth[3] (feet)	Top of Casing Elevation[3] (feet amsl)	Top of Screen Elevation[3] (feet amsl)	Static Water Level[3] (feet) and Elevation (feet amsl) October 2009	
MW-08[1]	75.65	905.75	839.94	49.08	856.67
MW-14[1]	58.87	909.81	861.05	53.41	856.40
MW-18[1]	59.02	908.10	859.09	51.31	856.79
MW-19[1]	93.93	907.61	823.67	51.38	856.23
MW-20[1]	89.00	909.81	830.85	53.67	856.14
MW-21[1]	93.95	905.57	821.63	49.39	856.18
MW-22[1]	91.63	907.68	826.09	49.97	857.71
MW-23[2]	102.30	909.33	817.03	53.24	856.09
MW-24[2]	102.30	908.01	815.71	52.14	855.87
MW-25[2]	106.52	908.19	811.67	52.49	855.70
MW-26[2]	89.92	906.25	826.33	49.91	856.34
MW-27[2]	133.24	906.42	783.18	51.27	855.15

[1] Total Depth measured on June 4, 2007.
[2] Total Depth measured on October 28, 2009.
[3] All depths measured from top of casing.
amsl—above mean sea level

Table 3-6. Summary of October 2009 monitoring well groundwater sampling and analyses

Groundwater Sampling Procedure	Analytes/Method	Number of Field Samples	Number of QC Field Samples[1]		
			Field Duplicate	Matrix Spike/Matrix Spike Duplicate	QA Split Samples
Modified low-flow sampling	VOCs/8260B	12	1	1	1

[1] Equipment blanks and trip blanks not included in this table. See Section 3.6.2 for more details regarding field QC samples, including trip and equipment blanks.
QA—Quality Assurance
QC—Quality Control
VOC—volatile organic compound

Modified low-flow sampling protocol was used to reduce the amount of IDW and is more representative of groundwater conditions than bailer-derived samples. Well protective casings, caps, and locks were undisturbed at the time of the sampling event. Water levels were measured and recorded in the field log book and groundwater samples were collected using dedicated bladder pumps and tubing. The static water level, tubing diameter, and tubing submergence was used to calculate the required purge volumes. Purge volumes were calculated using the formula of 0.02 L per foot of tubing submergence (Volume = $\pi R^2 h$, where R is the radius and h is the height) plus 400 milliliters [mL (volume of pump bladder)]. Actual purge volumes were determined once static water levels were measured. Purge rates did not exceed 300 mL/minute and well drawdown was not observed. After the calculated purge volumes were removed, measurement field parameters (i.e., temperature, pH, specific conductance) were monitored until stable at three minute intervals. These measurements are provided in Appendix C. The groundwater samples were collected in 40 mL volatile organic analysis (VOA) vials and placed on ice in coolers for shipping to the fixed-based laboratories. The project-specific reporting and method detection limits for CT Laboratories (primary lab) are presented in Table 3-7. QA samples were submitted to Test America – Chicago, located in University Park, Illinois.

Table 3-7. Project-specific reporting limits and method detection limits for CT Laboratories

Analyte	Method Reporting Limits (µg/L)	Method Detection Limits (µg/L)	Analyte	Method Reporting Limits (µg/L)	Method Detection Limits (µg/L)
1,1,1-Trichloroethane	0.2	0.05	Chlorobenzene	0.2	0.04
1,1,2,2-Tetrachloroethane	0.2	0.05	Chloroethane	0.23	0.07
1,1,2-Trichloroethane	0.2	0.06	Chloroform	0.2	0.022
1,1-Dichloroethane	0.2	0.06	Chloromethane	0.2	0.05
1,1-Dichloroethene	0.2	0.05	*cis*-1,2-dichloroethene	0.2	0.05
1,2,4-Trichlorobenzene	0.22	0.07	*cis*-1,3-dichloropropene	0.2	0.017
1,2-Dibromo-3-chloropropane	0.2	0.05	Dibromochloromethane	0.2	0.026
1,2-Dichlorobenzene	0.2	0.02	Dichlorodifluoromethane	0.2	0.03
1,2-Dichloroethane	0.2	0.03	Ethylbenzene	0.2	0.024
1,2-Dichloropropane	0.25	0.02	Isopropylbenzene	0.2	0.04
1,3-Dichlorobenzene	0.2	0.027	Methylene Chloride	0.59	0.18
1,4-Dichlorobenzene	0.2	0.04	M-Xylene	0.26	0.08
2-Butanone	2	0.6	O-Xylene	0.2	0.023
2-Hexanone	5.2	1.6	P-Xylene	0.26	0.08
4-Methyl-2-pentanone	2.8	0.8	Styrene	0.2	0.022
Acetone	5.2	1.5	Tetrachloroethene	0.2	0.05
Benzene	0.2	0.05	Toluene	0.2	0.06
Bromodichloromethane	0.2	0.028	*trans*-1,2-dichloroethene	0.21	0.06
Bromoform	0.2	0.04	*trans*-1,3-dichloropropene	0.2	0.017
Bromomethane	0.25	0.07	Trichloroethene	0.2	0.05
Carbon Disulfide	0.31	0.09	Trichlorofluoromethane	1	0.06
Carbon Tetrachloride	0.2	0.022	Vinyl Chloride	1	0.013

Note: M-xylene and P-xylene co-elute and, therefore, cannot be distinguished from each other. These are reported as M-xylene and P-xylene with a single value for both isomers. Holding time, according to the USEPA SW-846 Method 8260 (USEPA 1990) is 14 days from collection when preserved with hydrochloric acid.
USEPA—U.S. Environmental Protection Agency

After evacuating two volumes of tubing water, stabilization measurements commenced. Standard water quality field parameter "Hydrolab® Procedures" were followed. Once temperature, pH, and specific conductance parameters stabilized, flow rates were reduced to ≤ 100 mL/minute for sample collection. Table 3-8 provides method, preservation and holding time descriptions.

Table 3-8. Groundwater sample containers, preservation and holding times

Sample Medium	Analytes/Method	Container	Preservation	Holding Time
Groundwater	VOCs/8260B	2 x 40 mL VOA vial, Teflon septa cap	Cooled to 4°C, hydrochloric acid, pH<2	14 days

VOA—volatile organic analysis, VOC—volatile organic compound, mL—milliliter

TCE concentrations over time are displayed in Table 3-9 along with sample collection dates to present the well location impact as a function of time.

Table 3-9. Monitoring well data with TCE concentrations at MBA

Well Number	Date	TCE (µg/L) Trend[1]	Lab Qualifier
MW-8	6/2007	**19**	**-**
	8/2007	**12**	
	10/2009	**7.6**	**-**
MW-14	6/2007	<0.3	U
	8/2007	<0.3	
	10/2009	<0.05	-
MW-18	6/2007	0.8	J
	8/2007	0.6	
	10/2009	0.87	-
MW-19	6/2007	**32**	**-**
	8/2007	**33**	**J**
	10/2009	**22**	**-**
MW-20	6/2007	<0.3	U
	8/2007	0.4	
	10/2009	0.59	-
MW-21	6/2007	<0.3	U
	8/2007	<0.3	
	10/2009	<0.05	-
MW-22	6/2007	<0.3	U
	8/2007	<0.3	
	10/2009	<0.05	-
MW-23	10/2009	**48**	**M**
MW-24	10/2009	**12**	**-**
MW-25	10/2009	**5.7**	**-**
MW-26	10/2009	**51**	**-**
MW-27	10/2009	**16**	**-**

[1]Bolded values represent detections above regulatory limits
- indicates that no laboratory qualifier was needed
J—estimated value, M—MS and/or MSD recovery outside acceptance limits, U-non-detect value or the concentration quantitated below the MDL

TCE concentrations are displayed on an isoconcentration map (Figure 3-3) created from data collected during the October 2009 sampling event. Static water level measurements were taken October 28th and 29th to the nearest 0.01 foot in the 12 monitoring wells at the Raco AAF MBA (Table 3-5). A potentiometric map of the MBA is provided in Figure 3-4.

3.4 GROUNDWATER SAMPLING FROM EXISTING WATER SUPPLY WELLS

Groundwater samples were collected during a single event from four water supply wells located near the northeast corner of the airfield. The samples were submitted to CT Laboratories for analysis by Method 8260B LL. Chloroform, a common laboratory contaminant, was the only VOC constituent identified within the water supply well samples (0.41 µg/L from Well #4). The location of each well and corresponding building number is depicted on Figure 1-4. Note that the original sampling design was based on well locations obtained from MDNRE's interactive web site (http://wellviewer.rsgis.msu.edu/). A field reconnaissance concluded that only one well (Well #4 on Figure 1-4) was properly identified. This well is equipped with a high capacity pump and used to fill water trucks. The other three wells were

installed by Smithers to service buildings. The closest potable wells are located 2800 feet north of the MBA (Figure 1-4).

- **Well #1:** Smithers, 6-inch diameter, screened from 155 to 195 feet bgs - This well was not located at the MDNRE recorded location and is believed to have been geographically incorrectly transcribed during installation. This well provides water to buildings three and four.
- **Well #2:** Smithers, 6-inch diameter, screened from 138 to 146 feet bgs - This well was not located at the MDNRE recorded location and is believed to have been geographically incorrectly transcribed during installation. This well provides water to building five.
- **Well #3:** Smithers, 6-inch diameter, screened from 137 to 141 feet bgs - This well was not located at the MDNRE recorded location and is believed to have been geographically incorrectly transcribed during installation. This well provides water to building six.
- **Well #4:** MDNRE Well ID: 17000003385, Raco Airport, unknown diameter, total depth 82 feet bgs - This well supplies water jetting trucks that create ice for Smithers automotive testing. This potable well contains above-ground piping that leads to an elevated download pipe. The piping is used for direct truck or tanker trailers for road surface water application to manufacture ice for wintertime automotive tests such as brake and tire design.

Three wells (Wells #1, #2 and #3) provide drinking water to the on-site buildings currently owned by Smithers. One well supplies buildings three and four, while another supplies building five. A third well supplies building six. These wells provide fresh drinking water to faucets, fountains, and spigots. The three wells were in working order and a water softener or carbon filter was not present at the time of sampling. After the pump was engaged, water flowed for a minimum of 20 minutes. The flow rate from the faucet was lowered to approximately 100 mL/minute during sample collection. Unfiltered and non-aerated water samples were collected. Staining, odors, colors or complaints about water quality were not noted. The water samples were analyzed for VOCs, utilizing USEPA Method 8260B LL. VOCs were not detected above laboratory reporting limits in any of the water samples collected, with the exception of chloroform, considered in this instance to be a lab contaminant. A summary of the samples collected from the supply wells is provided in Table 3-10.

Table 3-10. Water supply well sample collection and analyses at Raco AAF

Sample ID	Well ID	Date Sampled	Sample Collection Location	Analysis Date	Analytes/ Method	Detected Compounds	QC Field Samples[1]		
							Field Duplicate	MS/MSD	QA Split Sample
RASW01010910	Well No. 1	10/28/09	Indoor Faucet	11/11/09	VOCs/ 8260 B LL	None	1	1	1
RASW02010910	Well No. 2	10/28/09	Indoor Faucet	11/11/09	VOCs/ 8260 B LL	None	-	-	-
RASW03010910	Well No. 3	10/28/09	Indoor Faucet	11/11/09	VOCs/ 8260 B LL	None	-	-	-
RASW04010910	Well No. 4 (MDNRE Well ID: 17000003385)	10/28/09	Drainage Valve	11/11/09	VOCs/ 8260 B LL	Chloroform at 0.41 µg/L	-	-	-

[1] Equipment blanks and trip blanks not included in this table. See Section 3.6.2 for more details regarding field QC samples, including trip and equipment blanks.
MS/MSD—Matrix Spike/Matrix Spike Duplicate
QA—Quality Assurance
QC—Quality Control
VOC—volatile organic compound

3.5 WELL SURVEY

A well survey was conducted within a one mile radius of the Raco AAF to locate and identify private and public/domestic water supply wells. Internet search portals (through MDNRE) were utilized to compile the available public information (http://wellviewer.rsgis.msu.edu/, http://www.deq.state.mi.us/well-logs/). Water supply wells located within a one mile radius of the site are provided in Table 3-11, along with total depth and coordinates (water well logs are provided in Appendix D). The wells are graphically illustrated on Figure 3-5. Note that Table 3-11 includes all wells identified through the MDNRE online database and is not considered accurate. The only supply wells observed within one mile were those sampled as part of this investigation, with the exception of an open well located west of the former Composite Building, near the former water storage tank (shown on Figure 4-1). The open well was observed to be approximately six inches in diameter and 119 feet deep (measured from top of casing); no static water level was recorded. Per the scope of work for this investigation, no samples were collected from the open well. The well was capped on October 10, 2009 with an 8 inch diameter PVC cap.

Table 3-11. Water supply wells within a one-mile radius of Raco AAF

Well identification	Latitude	Longitude	Total well depth (feet)
17000003381	46.361214	-84.827973	58
17000003385	46.356443	-84.802240	82
17000003386	46.352186	-84.802376	59
17000003387	46.358490	-84.806981	195
17000003388	46.358506	-84.806973	141
17000003389	46.358512	-84.807061	151
17000003390	46.358872	-84.811303	146
17000006628	46.360218	-84.802672	141

3.6 FIELD QUALITY CONTROL PROCEDURES AND DOCUMENTATION

3.6.1 Field Instrument Calibration and Maintenance

GEO project personnel performed daily instrumentation calibration (Hydrolab® and PID). All field measurement instruments were calibrated according to the manufacturer's instructions prior to the commencement of the day's sampling activities. Calibration information was documented on instrument calibration and maintenance log sheets and in the field logbook. Information included the date, operator, and calibration standards (concentration, manufacturer, lot number, expiration date, etc.). All project personnel using measuring equipment or instruments in the field were trained in the calibration and usage of the equipment. The daily calibration checks included exposing the instrument to a known source of analyte (e.g., the calibration solution, isobutylene gas), and verifying/adjusting the response. Instrument response outside of specifications was not noted.

Field equipment was maintained at its proper functional status in accordance to manufacturer manual specifications. A check of the equipment was performed before field activities began and potential spare parts (e.g., batteries, connectors, etc.) and maintenance tools were brought on-site to minimize equipment downtime. Routine preventive maintenance was performed to ensure proper operation of the equipment. Maintenance performed on field equipment was documented on instrument calibration and maintenance forms, as well as in the designated field logbook. Unusual or unique maintenance was not required.

3.6.2 Field Quality Control Samples

Equipment Blanks (EBs) were collected by pouring/pumping deionized (DI) water over/through decontaminated equipment or disposable equipment, and collecting the rinsate. EBs were collected daily

during the VAP and from one of the pumping systems installed in one of the new wells prior to installation. Pumps were dedicated and remain in the wells between events. Preservation and analysis of field EBs was identical to analysis of the associated environmental samples.

A **trip blank (TB)** serves to detect possible cross-contamination of samples as a result of handling, storage, and shipment procedures. TBs consist of containers originating from the laboratory, which are filled with DI water and preserved accordingly. In addition, TBs are stored by the laboratory under the same conditions as the environmental samples. A TB accompanied each groundwater sample cooler and was preserved (as per the aqueous samples) and analyzed identically to the associated environmental samples.

A **temperature blank** was sent with each cooler of samples to verify that the cooler temperature was maintained at 4 °C. A dated vial was filled with either potable or DI water and labeled with "Cooler Temperature Blank". The laboratory recorded the temperature of the blank water on the chain of custody upon cooler arrival and logged the result on the chain of custody.

Field duplicate (FD) samples were analyzed by the off-site laboratory to evaluate the reproducibility of the sampling procedures. FD samples were collected at a rate of one duplicate for up to every 10 environmental samples of the same matrix (see Tables 3-2, 3-6, and 3-10). The duplicate samples were collected from the same location and at the same time as the original environmental sample. The duplicated samples were "coded" with a unique sample identifier so the laboratory could not determine which original field sample they duplicated (i.e., "blind" duplicates). An explanation of the duplicate "coding" is provided in Section 3.8.1. Duplicate samples were noted in the field logbook. Preservation and analysis of duplicate samples was identical to environmental samples.

Matrix spike (MS)/matrix spike duplicates (MSD). Groundwater MS/MSD sample pairs were collected from one monitoring well (Tables 3-2, 3-6, and 3-10, Analyses of MS/MSD are displayed in Appendix E).

Split Samples. Samples that are split from primary samples (normally 10% of primary) are called QA samples, and were analyzed by another certified laboratory (Tables 3-2, 3-6, and 3-10). During the VAP investigation, CT Laboratory served as the secondary QA laboratory and Trace Analytical was the primary laboratory. During the groundwater sampling phase of the investigation, Test America - Chicago, located in University Park, Illinois served as the QA laboratory, while CT Laboratory, Baraboo Wisconsin was the primary laboratory.

3.6.3 Field Logbooks

Documentation in field logbooks is an important record for reconstructing field and sample handling activities. Copies of the field logbook pages are included in Appendix C of this report. All field logbooks are bound with consecutively numbered pages.

3.6.4 Field Performance Audits

GEO ensured quality in the field work by following the USACE (2001) three-phase control process [Section 3.3.4. of USACE Engineering Manual (EM)-200-1-3]. The three phases consisted of the preparatory phase, initial phase, and follow-up phase. The Project Quality Control (QC) Manager, or designee (e.g. Project Manager), conducted inspections for all three phases. The preparatory phase inspection was performed before field activities were initiated and consisted of: (1) conducting an inventory of equipment and supplies needed for the subsurface investigation and groundwater sampling, (2) making sure that field personnel had the required training and were cognizant of sampling and

documentation procedures for the project, and (3) ensuring that subsurface investigation and sample analyses subcontractors maintained the highest standards and efficiency, as required by GEO.

The initial phase inspection coincided with day one field activities and consisted of inspecting and documenting field supplies to ensure compliance with project requirements. The follow-up phase inspections were conducted on an "as-needed" basis to ensure continued compliance with project requirements. General procedures and sample documentation were checked periodically by the Project QC Manager or designee.

Surveillance of field program activities was conducted by the GEO Project Manager and/or designee. USACE and/or MDNRE personnel accompanied GEO and subcontractor personnel into the field to perform inspections of the field program and to verify that the surveys and sampling were correctly implemented according to project documents. No deficiencies were noted during the audit.

3.6.5 Corrective Actions

Deviations from the specified procedures within the approved project plans were limited. Problems brought to the attention of the Project Manager (or designee), USACE, and MDNRE were promptly investigated, evaluated and corrected. The required steps for review and implementation of change included identification (ID), cause, corrective action, consultation with personnel, approval, corrective action, and verification of problem elimination. During the well installation phase of the investigation, a change occurred when groundwater samples were retrieved with a push-ahead sampling technique, instead of the "inside casing" sampling technique. Discussed by GEO, USACE, MDNRE and Boart Longyear representatives, the push ahead technique overcame suspected diluted groundwater samples. Fine grained sands grading to very fine grained sand with increased silt were generally encountered in the borings at around 90 feet bgs. Groundwater samples within the very fine grained material intervals were not recoverable with the bladder pump due to the formation materials clogging the pump screen. The screen point sampler was mechanically advanced into the formation 10 to 20 feet lower than the bottom of the casing. The sampler screen was opened by retracting the drill rods allowing water to enter the drill rods where it could be collected by the bladder pump. A few exceptions occurred during drilling (most notably VSB-10) where groundwater samples were acquired with a bailer. Bailer samples were used when very fine sands prevented the bladder pump from functioning.

A corrective action occurred when groundwater potable wells near Smithers buildings were not found in MDNRE documented locations. The field investigation included walking the exact MDNRE documented locations and examining the ground for disturbed or abandoned buildings. Samples were taken from four wells at the Smithers facility, as located by Smither's employee Tom Morrow.

3.7 SAMPLE CUSTODY, HANDLING, AND HOLDING TIMES

3.7.1 Documentation of Custody

Sample custody was strictly maintained and carefully documented during collection, transportation, receiving, preparation and analysis. Custody procedures ensure that samples collected during the field investigation were traceable from collection until disposal and/or storage. Sample chain of custody included (1) being in the sampler's possession; (2) transportation via Federal Express, or being carried directly to a laboratory; (3) possession by a laboratory sample receiving manager; (4) held/analyzed/stored by the laboratory sample manager or documented laboratory assignee; and (5) being placed in a designated secure and temperature correct area.

Chain-of-custody forms project records, correspondence, field logbooks, reports, and all relevant and recordable facts and figures are retained in a secure file. GEO will hold all project records for seven years.

Chain-of-custody forms are provided with the analytical data summary reports presented in Appendix E of this report.

Field custody procedures were implemented for each sample collected. The field sampler was responsible for the care and custody of the samples until they were properly transferred or dispatched. To assure integrity, the samples were maintained in a designated, secure area, and/or custody-sealed in the appropriate containers prior to shipment. Each environmental sample was properly identified and individually labeled prior to proper packaging and shipping for analysis. Required containers, preservatives, and holding times are described in the applicable analytical methodologies. A chain-of-custody record accompanied the associated samples from time of collection to receipt by the analytical laboratory. The field chain-of-custody procedures will follow requirements in *Appendix F, Sample Documentation and Shipment Instructions* of USACE EM 200-1-3 (USACE 2001). A summary follows:

- A chain-of-custody record accompanied the samples from the time of collection to analytical laboratory manager receipt.
- The chain-of-custody used indelible ink to write the name and contact information of the field investigator that assumed responsibility for the samples, the USACE contract number, the project name, and the project location. The chain-of-custody record was placed in a plastic bag and attached to the inside of the cooler lid.
- The chain-of-custody record matched the associated sample container labels.
- Chain-of-custody adhesive seals were signed and dated by the field investigator on containers and/or shipping coolers prior to sample shipment. When the sealed container or cooler was opened, the seal was broken and documentation was provided by correct company personnel.

3.7.2 Holding Times and Turnaround Time

Each analytical method has a specified holding time for the field samples (see Table 3-7 as defined in the specific method procedure). The laboratories successfully analyzed all samples within the maximum holding times, as provided by the specific method.

3.7.3 Sample Numbering System

A sample numbering system identified collection times, dates, and locations to assist tracking and facilitate information retrieval. The sample ID numbers were used on sample labels, chain-of-custody forms, field logbooks, field sheets and all other documentation. QC samples were disguised using the same numbering system selected for the field samples.

The sample numbers consist of five distinct fields:

XX nn #### tt YYMM

where,

XX	site location designation
nn	matrix type:
	"GW" for groundwater MW samples
	"VW" for VAP groundwater sample
	"SW" for water supply well samples
	"VS" for VAP soil sample

####	unique four digit sample number. When numbering TBs, the first digits indicate the shipment number. For VAP samples, the final two numbers indicate the collection depth.
tt	sample type: 01 = primary sample 02 = duplicate (QC) sample
YYMM	year/month (when two or more sampling events occur at one sampling location over a period of time)

Example:

RAGW18010909: Groundwater (GW) sample collected from MW-18 (18) located at Raco AAF (RA), September 2009 (0909), primary sample (01).

RAVS0102800909: VAP soil sample (VS) collected from the first VAP boring (01) located at Raco AAF (RA), from a depth of 80 – 90 feet bgs, September 2009 (0909), QC sample (02).

RAEB01020909: EB sample collected from the first piece of sampling equipment (01) for Raco AAF (RA), September 2009 (0909), QC sample (02).

Each sample number changed with location, due to different requested analyses. For example, water samples collected at the same location, date, and time for VOCs analysis have the same sample number, although the various sample aliquots were collected in different containers.

3.8 MANAGEMENT OF INVESTIGATION-DERIVED WASTE (IDW)

IDW generated by groundwater and soil sampling including personal protective equipment, soil cuttings, purge groundwater, and decontamination water were placed in bulk storage containers (roll-off bin for soil and frac tank for liquids) provided by Clean Harbors of Sterling Heights, Michigan. The IDW was disposed of in accordance with state and federal regulations. Copies of the waste manifest disposal documents are provided in Appendix C.

4. VERTICAL AQUIFER PROFILE INVESTIGATION

4.1 SUMMARY OF VAP INVESTIGATION

Ten VAP borings were drilled near the MBA at Raco AAF through predominantly fine grained sands with trace silt (Figure 1-3). Boring depths ranged from 58 feet to 157 feet bgs. Based on previous investigations, the focus of the VAP investigation was to identify the source area of TCE impact and define the boundaries of TCE-impacted groundwater. The former wastewater treatment lagoon (Figure 1-3) may be the TCE source area with downgradient exceedances of TCE in VSB-02, VSB-03, VSB-04, VSB-06, VSB-08 and VSB-10. Soil VOC impact was limited to a single location (26 feet bgs, VSB-07) near UST C-4. This area contained a former heating oil tank that was excavated in 1987 and was not considered a TCE source area based on the very low concentrations of TCE detected in the laboratory analyses.

After reaching the zone of saturation, every 10 feet of boring advancement was followed by groundwater sampling. Groundwater sampling parameters included time, temperature, specific conductance, pH, DO, ORP, and turbidity. During groundwater sample collection using a bladder pump for the VAP investigation, wells were purged using modified low-flow techniques until temperature, pH, and specific conductance had stabilized (provided in Appendix C). Due to the fine grained formation sands (smaller than the slots in the screen point sampler), the samples analyzed by the on-site mobile laboratory were often high in suspended solids. No parameters were measured for groundwater samples collected with a bailer. Depth to groundwater ranged from 49.08 feet bgs to 53.67 feet bgs across the MBA. Analytical results from the mobile laboratory were used to guide the successive VAP locations and the conversion of five VAP borings to monitoring wells.

The highest detected TCE concentration was at MW-26 (67 µg/L, 77 feet bgs, approximately 40 feet east of the source). The second highest concentration was at MW-27 (61 µg/L, 127 feet bgs and approximately 400 feet east of the source).

4.2 CONCLUSION

The VAP investigation identified the former wastewater treatment lagoon as the likely source of the dissolved TCE groundwater plume, which is located east of the former maintenance assembly building (Figure 3-2 and Figure 4-1). Monitoring well placement downgradient of the source identified a dissolved phase TCE plume moving eastward following groundwater flow direction and downward through very fine grained sands with trace to little silt. The TCE source was further confirmed by the advancement of VAP soil borings upgradient of the lagoon, in which TCE was found to be below detection limits. The only exception to TCE non-detects was identified in VSB-09 (2 µg/L at 67 feet bgs), which was advanced immediately upgradient of the former wastewater lagoon location. It is expected that this concentration represents minimal dispersion in an upgradient direction. The apparent greatest width of the plume (as defined by the 5 µg/L TCE concentration contour in Figure 3-3) is 143 feet wide and the greatest known extent of downgradient TCE migration in groundwater is approximately 450 feet to the east of the former wastewater lagoon (Figure 3-3), the presumed source of contamination. Delineation of the extent of groundwater contamination is partially defined to the north of the source area by MW-21, MW-14, and VSB-05, to the west by VSB-05, VSB-07, and VSB-09, and to the south by MW-18, MW-20, and MW-22. TCE was observed at 127 feet bgs in MW-27, the furthest monitoring well to the east. The TCE plume is not delineated south of MW-24, east of MW-27, or northeast of MW-25. The VAP investigation confirmed eastward migration of the TCE plume, following groundwater flow and downward migration through the sandy aquifer.

5. GROUNDWATER SAMPLING EVENT – OCTOBER 2009

5.1 SUMMARY OF GROUNDWATER SAMPLING EVENT

On October 28 and 29, 2009 16 wells were sampled at Raco AAF. Four of the wells were potable groundwater wells used by Smithers. Seven of the wells were monitoring wells existing prior to this investigation (MW-08, MW-14, MW-18, MW-19, MW-20, MW-21 and MW-22) and five were monitoring wells (MW-23 through MW-27) installed during this investigation (September and October 2009). All wells were purged and sampled with dedicated pumps using modified low-flow techniques. All five of the monitoring wells installed during the VAP investigation displayed TCE impact exceeding MDNRE water quality standards (MW-23 through MW-27, Table 3-8). In addition, MW-08 and MW-19 displayed TCE impact exceeding RCDWC (MW-8 and MW-19). VOC's were not found in the supply wells. The highest groundwater TCE concentration was recorded during the VAP investigation installed wells (MW-23 and MW-26, TCE isoconcentration contour Figure 3-3). Impact is vertically represented in Figure 3-2 and the TCE plume is shown moving downward as it moves to the east following the groundwater flow direction within the unconfined aquifer and porous sand media.

A search of the MDNRE water well database revealed five water supply wells at Raco AAF. A field reconnaissance identified four water supply wells, with only one (Well #4, Figure 1-4) corresponding to the database. The four water supply wells were identified near the Smithers buildings; approximately 2800 feet cross gradient and directly north of the plume. Total depth of the Smithers wells range from 82 to 195 feet bgs. The three wells servicing building/facilities were sampled from non-aerated, unfiltered water sources inside the Smithers buildings (kitchen and/or bathroom sinks), after approximately 20 minutes of water flow. The fourth well is equipped with a high capacity pump and is used to fill water trucks. The sample from this well was collected from the gravity drainage line. The four wells were sampled on October 29, 2009, and analytical results were non-detect (ND) for VOCs. Potential receptors other than Smithers were not located within a one mile radius.

5.2 CONCLUSION

The 2009 RI/FS activities at Raco AAF have partially defined the northern, southern, and vertical extents of the TCE plume. Based on the TCE concentrations identified in VSB-10/MW-27 during this investigation, the eastern portion of the TCE plume has not been fully defined. TCE is moving eastward and downward with distance from the former wastewater lagoon. Groundwater sampling results have demonstrated an eastward migrating TCE plume that has not impacted potential receptors within one mile. The western extent was defined by the placement of VAP borings (VSB-05 and VSB-08, Figure 1-3) west of the former wastewater treatment lagoon area.

TCE concentrations are delineated from the former wastewater lagoon by non-detect VAP borings and monitoring wells in the following locations: to the north (MW-14 and MW-21), to the west (VSB-01, VSB-05, VSB-07 and VSB-09), and partially to the south [MW-18, MW-20 and MW-22 (Figure 3-3)]. The TCE groundwater plume is moving eastward and downward with stable trends, versus distance traveled (Figure 3-2).

Based on data collected during the 2009 RI, the TCE plume is migrating east/southeast with a vertical eastern extent of 135 feet bgs and with horizontal measurements of 450 feet west to east, 68 feet north, 75 feet south, and zero feet west of the former wastewater lagoon location. The potable wells sampled in October 2009 at Raco AAF did not show evidence of VOC impact and were not posing a threat to the lives, health, or safety of the local population.

6. REFERENCES

Barr (Barr Engineering) 2002. *Raco Document Review and Site Evaluation prepared for the United States Department of Agriculture, Forest Service*. July.

BCM (BCM Engineers, Planners, Scientists, and Laboratory Services) 1996. *Final Soil Probe Investigation and Closure Report for Former RACO Airfield and Bomarc Missile Site, Raco, Michigan*. February.

Chippewa County Summary n.d. *Groundwater Mapping Project*. Various authors and contributors as referenced at http://gwmapinfo.rsgis.msu.edu/summary.php?thiscounty1=Chippewa.

DoD (Department of Defense) 2009. *Environmental Data Quality Workgroup. Quality Systems Manual (QSM) for Environmental Laboratories, Final Version 4.1*. April.

Earth Tech (Earth Tech, Inc.) 2003. *Draft Field Sampling Plan Revision 1, Raco Army Airfield and Bomarc Missile Site.* July.

Earth Tech (Earth Tech, Inc.) 2005. *Draft Site Investigation and Associated Activities Report.* April.

Envirodyne Engineers (Envirodyne) 1987. *Contamination Evaluation for the former Bomarc Missile Site, Raco Michigan, Final Report*.

GEO (GEO Consultants, LLC) 2008. *Report of Findings, Raco Army Air Force Base and Bomarc Missile Site, Environmental Site Investigation (Phase III), Hiawatha National Forest, Raco, Michigan*.

GEO (GEO Consultants, LLC) 2009a. *Quality Control Plan, Raco Army Air Force Base and Bomarc Missile Site, Remedial Investigation/Feasibility Study Activities, Hiawatha National Forest, Raco, Michigan*. May.

GEO (GEO Consultants, LLC) 2009b. *Site-Specific Safety and Health Plan, Raco Army Air Force Base and Bomarc Missile Site, Remedial Investigation/Feasibility Study Activities, Hiawatha National Forest, Raco, Michigan*. September.

GEO (GEO Consultants, LLC) 2009c. *Sampling and Analysis Plan, Raco Army Air Force Base and Bomarc Missile Site, Remedial Investigation/Feasibility Study Activities, Hiawatha National Forest, Raco, Michigan.* September.

GEO (GEO Consultants, LLC) 2009d. *Work Plan, Raco Army Air Force Base and Bomarc Missile Site, Remedial Investigation/Feasibility Study Activities, Hiawatha National Forest, Raco, Michigan.* September.

IT Corp. (Information Technology Corporation) 1991. *Remedial Investigation, Former Air Force Airfield and Bomarc Missile Site, Chippewa County, Michigan*.

Reed, R.C. and Daniels, J. (compilers) 1987. *Bedrock geology of northern Michigan: Geological Survey Division, Michigan Dept. of Natural Resources*.

USACE (U.S. Army Corps of Engineers) 2001. Engineer Manual (EM) 200-1-3, *Requirements For The Preparation of Sampling and Analysis Plans*.

USACE (U.S. Army Corps of Engineers), Louisville District 2009. S*cope of Work, Remedial Investigation/Feasibility Study Activities, Raco Army Airfield (AAF) and Bomarc Missile Site, Hiawatha National Forest, Raco, Michigan*, March.

USEPA (U.S. Environmental Protection Agency) 1990. *SW-846, Third Edition, Update 1, Revision 1*.

USEPA (U.S. Environmental Protection Agency) 1999. *National Functional Guidelines for Organic Data Review*, EPA 540/R-99/008, October.

Vanlier and Deutsch 1958. *Michigan Geological Survey Division, Reconnaissance of the Ground-Water Resources of Chippewa County, Michigan*.

Weaver, T.L. 1996. *Hydrogeology and ground-water quality of the Bay Mills Indian Community study area, near Brimley, Michigan.* United States Geological Survey Fact Sheet FS-247-95.

Woodruff, C.L. and Pearce, R. 1989. *Raco, A Case Study*. USACE Detroit District and Ronald Pearce, Sault Ste. Marie Area Office, USACE Detroit District, undated but post 1989 (Case Study)].

APPENDICES

APPENDIX A

FIGURES

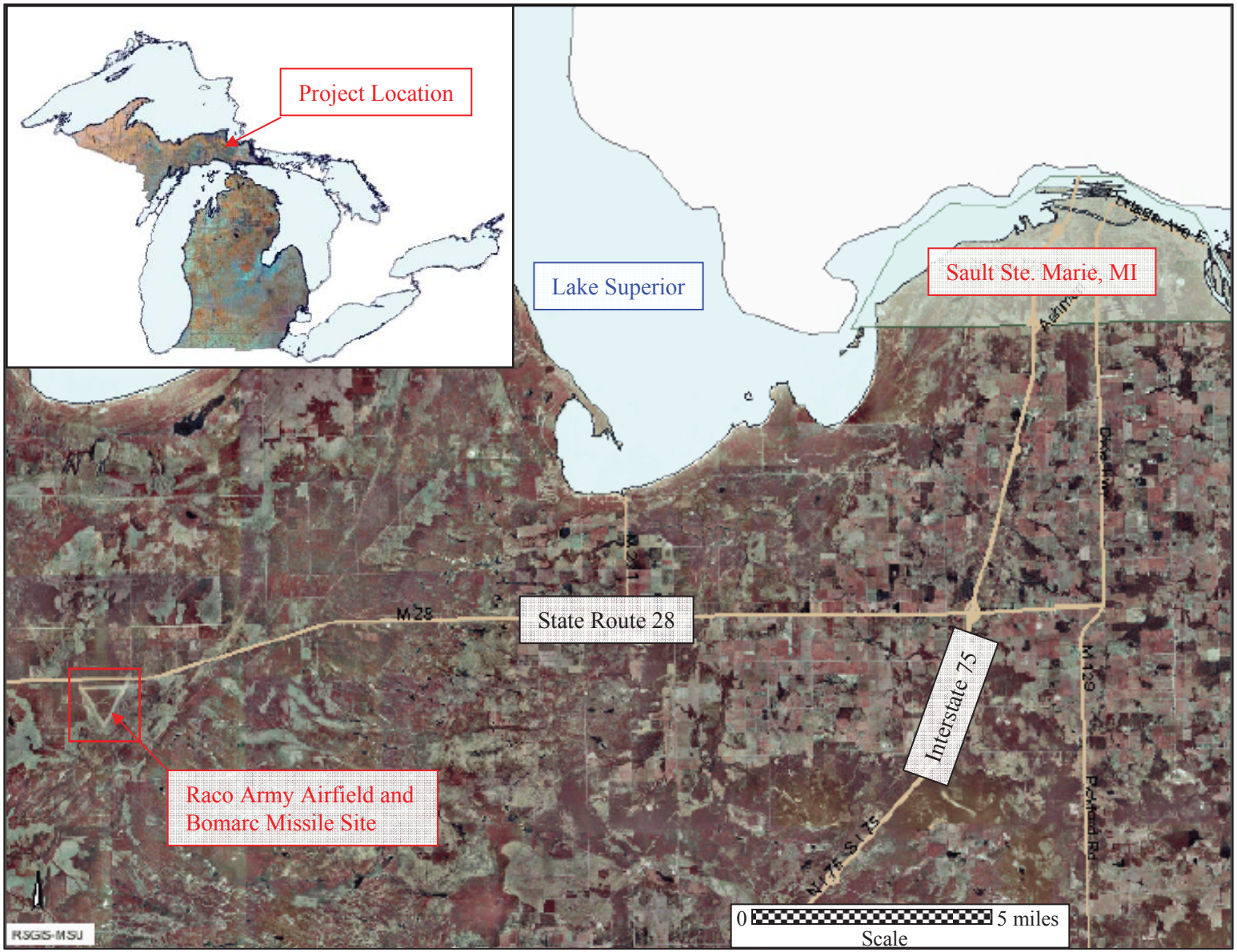

Base maps: USGS 1998 Digital Orthophoto Quadrangle Series. Obtained from Michigan Remote Sensing and Geographic Information Science Research and Outreach Services.

Figure 1-1. Site location map for Raco Army Airfield and Bomarc Missile Site.

U.S. Army Corps of Engineers
Louisville District

GEO Consultants, LLC
A Geological Engineering and Environmental Services Company
Kevil, Kentucky

Raco Army Airfield and Bomarc Missile Site Raco, Michigan

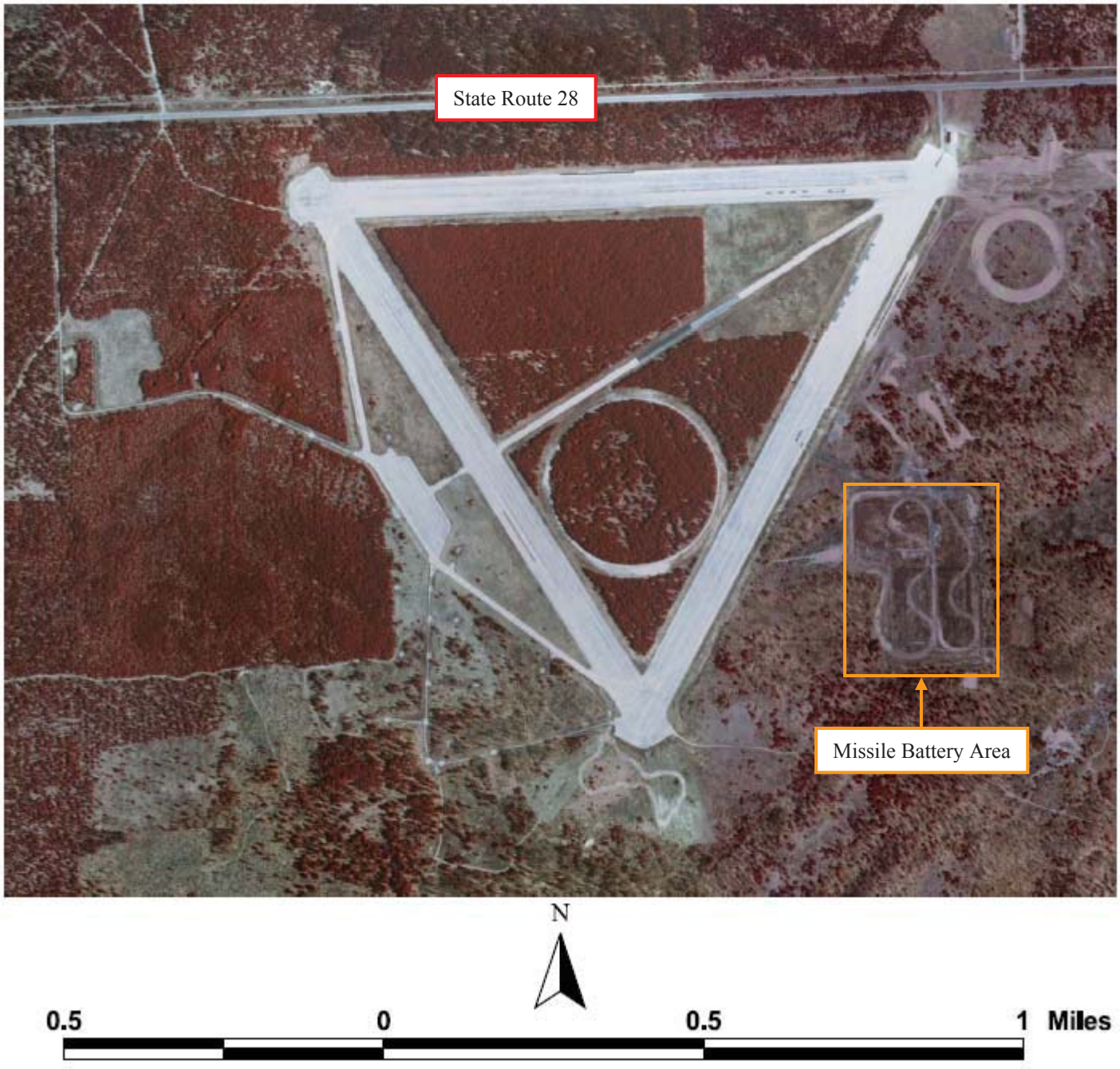

Source: USGS Seamless Server

Figure 1-2. Site vicinity map for Raco Army Airfield and Bomarc Missile Site.

Raco Army Airfield and Bomarc Missile Site
Raco, Michigan

U.S. Army Corps of Engineers
Louisville District

GEO Consultants, LLC
A Geological Engineering and Environmental Services Company
Kevil, Kentucky

N

0 225 450 900 Feet

△ = VAP boring location

● = VAP boring completed as permanent monitoring well

■ = Former wastewater lagoon location

Source: 2005 orthoimagery - Michigan Center for Geographic Information

Figure 1-3. RI/FS activities boring locations.

Raco Army Airfield and Bomarc Missile Site
Raco, Michigan

U.S. Army Corps of Engineers
Louisville District

GEO Consultants, LLC
A Geological Engineering and Environmental Services Company
Kevil, Kentucky

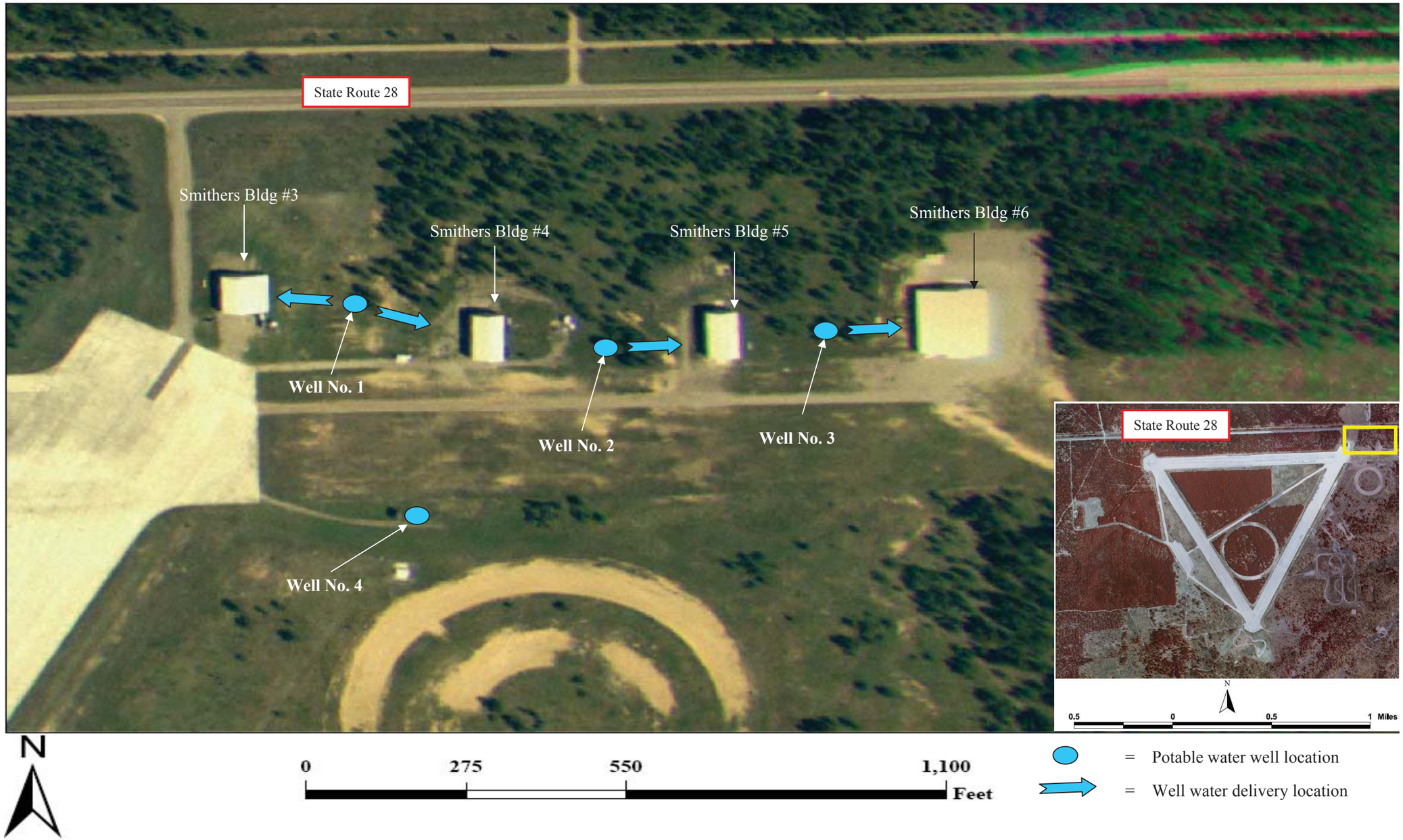

Base map: 2005 orthoimagery, Michigan Center for Geographic Information
Well locations based on field observations and interviews with Smithers Scientific personnel

Figure 1-4. Water supply wells located at the Raco Army Airfield and Bomarc Missile Site.

U.S. Army Corps of Engineers
Louisville District

GEO Consultants, LLC
A Geological Engineering and Environmental Services Company

Raco Army Airfield and Bomarc Missile Site Raco, Michigan

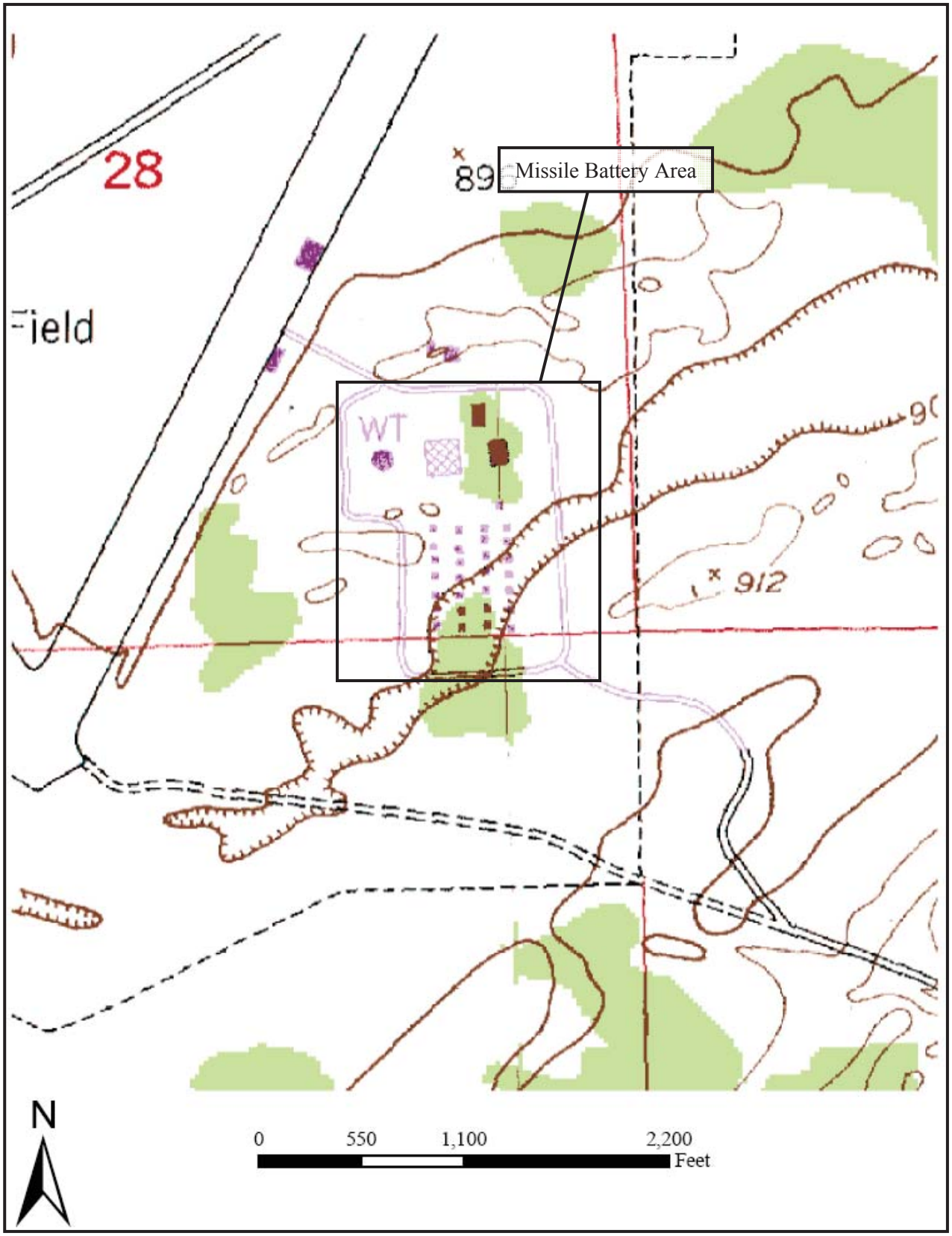

Source: USGS Seamless Server

Figure 2-1. Topographic map for Raco Army Airfield and Bomarc Missile Site.

Raco Army Airfield and Bomarc Missile Site
Raco, Michigan

U.S. Army Corps of Engineers
Louisville District

GEO Consultants, LLC
A Geological Engineering and Environmental Services Company
Kevil, Kentucky

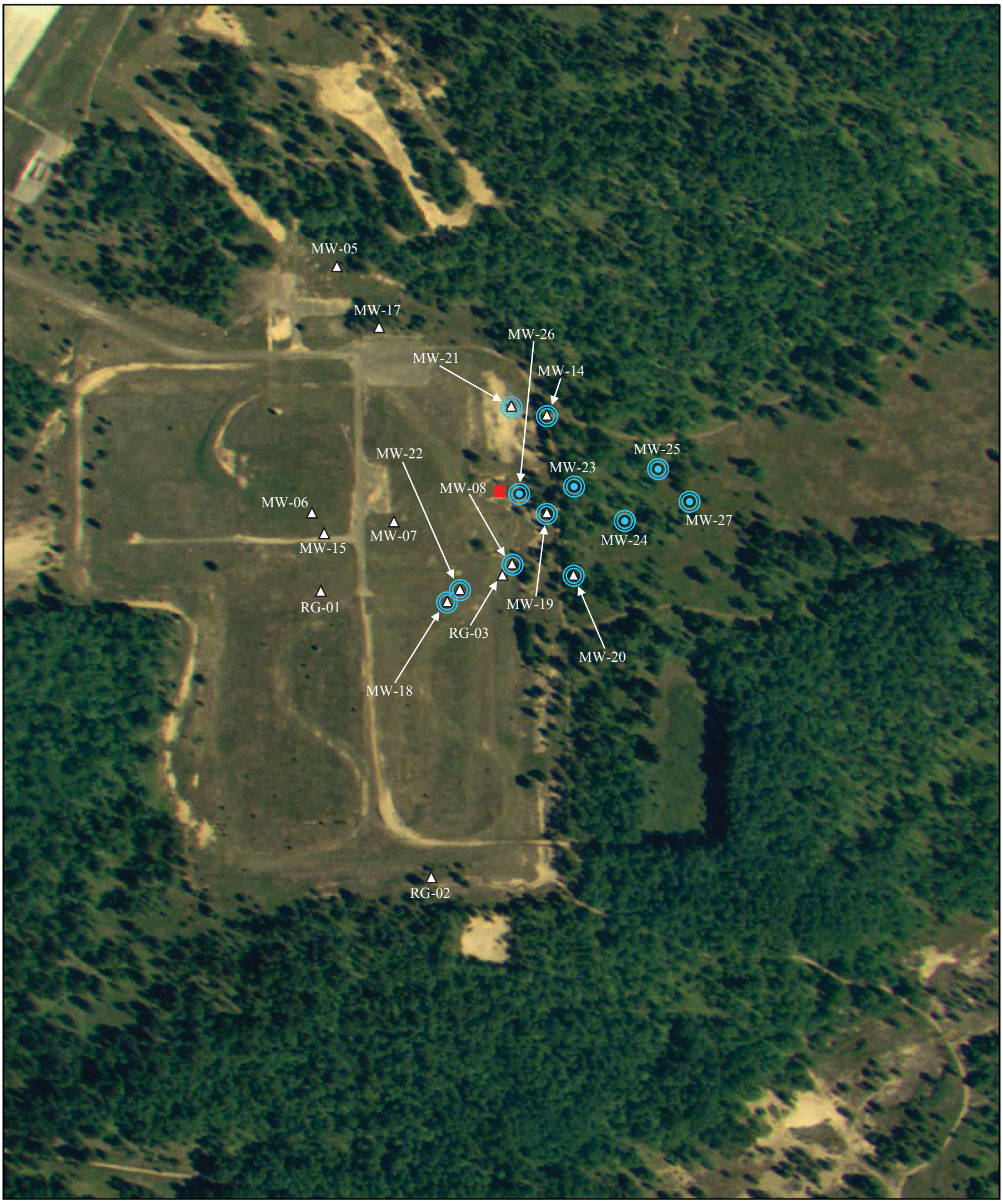

N

0 225 450 900 Feet

△ = Existing monitoring well

● = New monitoring well

■ = Former wastewater lagoon location

◎ = Well sampled during October 2009 groundwater sampling event

Source: 2005 orthoimagery - Michigan Center for Geographic Information

Figure 2-2. Raco Army Airfield and Bomarc Missile Site Missile Battery Area monitoring well locations.

Raco Army Airfield and Bomarc Missile Site
Raco, Michigan

U.S. Army Corps of Engineers
Louisville District

GEO Consultants, LLC
A Geological Engineering and Environmental Services Company
Kevil, Kentucky

Figure 3-1. VAP screen point sampler.

Raco Army Airfield and Bomarc Missile Site Raco, Michigan

U.S. Army Corps of Engineers
Louisville District

GEO Consultants, LLC
A Geological Engineering and Environmental Services Company
Kevil, Kentucky

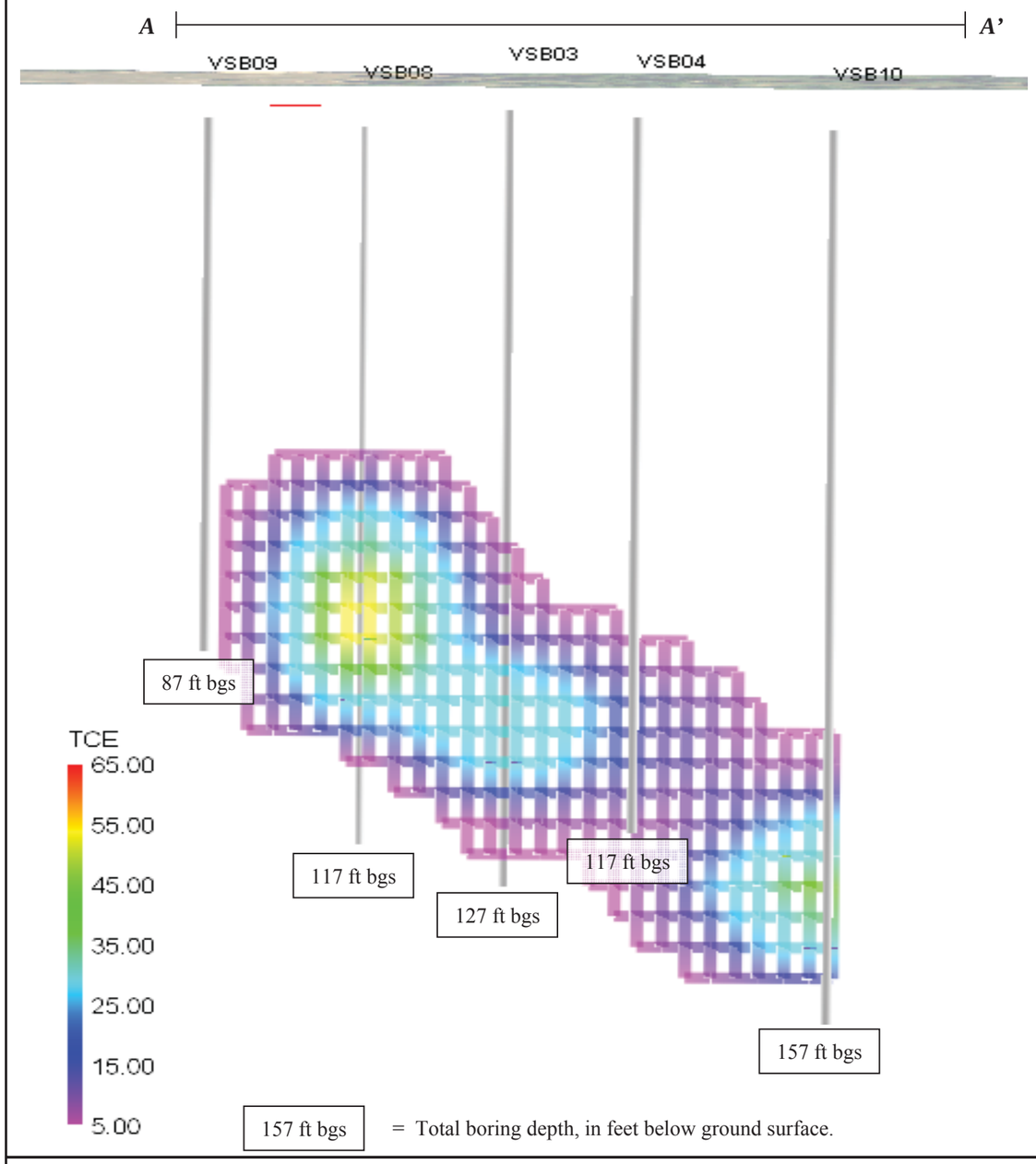

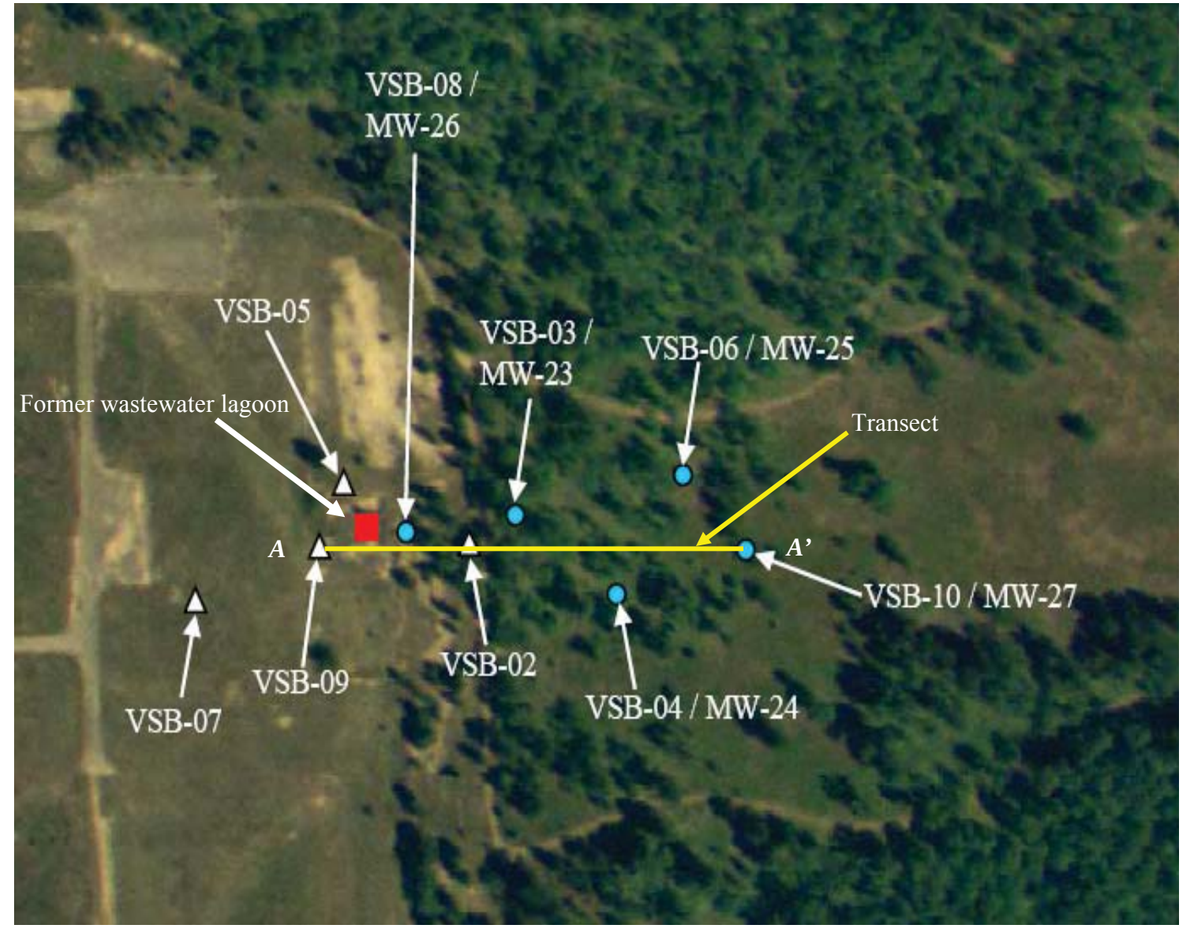

Boring location map

N

Base map: 2005 orthoimagery, Michigan Center for Geographic Information
5X Vertical Exaggeration, TCE concentrations given in µg/L. Modeled in Rockware® 2004

Figure 3-2. Cross section of TCE impact plume.

U.S. Army Corps of Engineers
Louisville District

GEO Consultants, LLC
A Geological Engineering and Environmental Services Company

Raco Army Airfield and Bomarc Missile Site Raco, Michigan

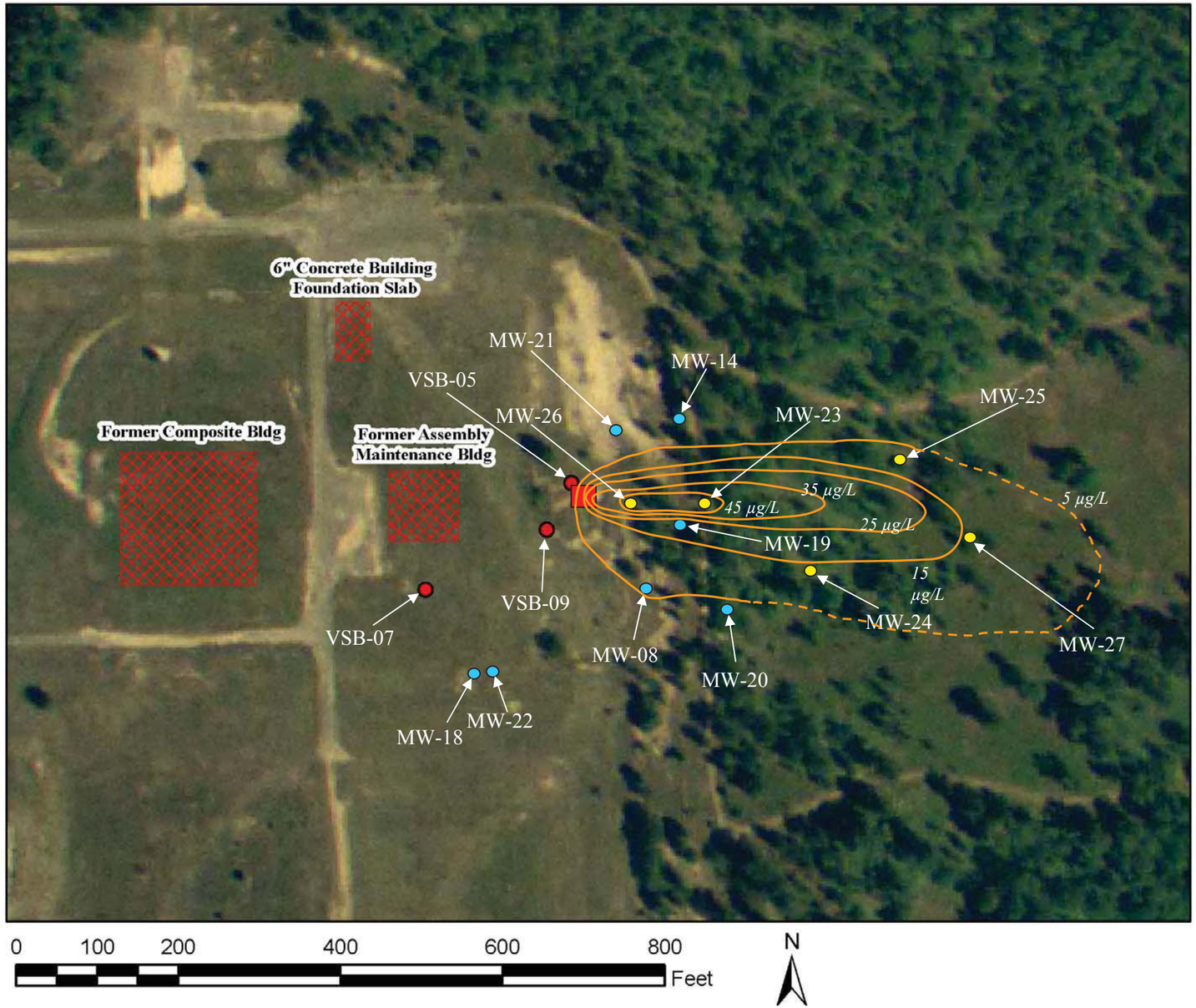

Monitoring wells sampled during October 2009 sampling event.

MW-08	7.6 µg/L
MW-14	BDL
MW-18	0.87 µg/L
MW-19	22 µg/L
MW-20	0.59 µg/L
MW-21	BDL
MW-22	BDL
MW-23	48 µg/L
MW-24	12 µg/L
MW-25	5.7 µg/L
MW-26	51 µg/L
MW-27	14 µg/L

TCE concentrations collected from up-gradient sampling points advanced during the VAP investigation

VSB-05	BDL
VSB-07	BDL
VSB-09	2.0 µg/L (67 feet bgs)

- VAP borings
- Former wastewater treatment lagoon
- Previous monitor wells
- Monitor wells installed October 2009
- TCE isopach contour line (10 µg/L interval, dashed where inferred)

Base map: 2006 orthoimagery, USGS seamless server
(TCE concentrations based on October 2009 groundwater sampling event)

Figure 3-3. TCE concentrations in groundwater.

U.S. Army Corps of Engineers
Louisville District

GEO Consultants, LLC
A Geological Engineering and Environmental Services Company

Raco Army Airfield and Bomarc Missile Site Raco, Michigan

Contour interval – 0.10-foot

Source: 2005 orthoimagery – Michigan Center for Geographic Information
Potentiometric surface data from 10/09 monitor well sampling event.

Figure 3-4. Potentiometric surface map.

U.S. Army Corps of Engineers
Louisville District

GEO Consultants, LLC
A Geological Engineering and Environmental Services Company

Raco Army Airfield and Bomarc Missile Site
Raco, Michigan

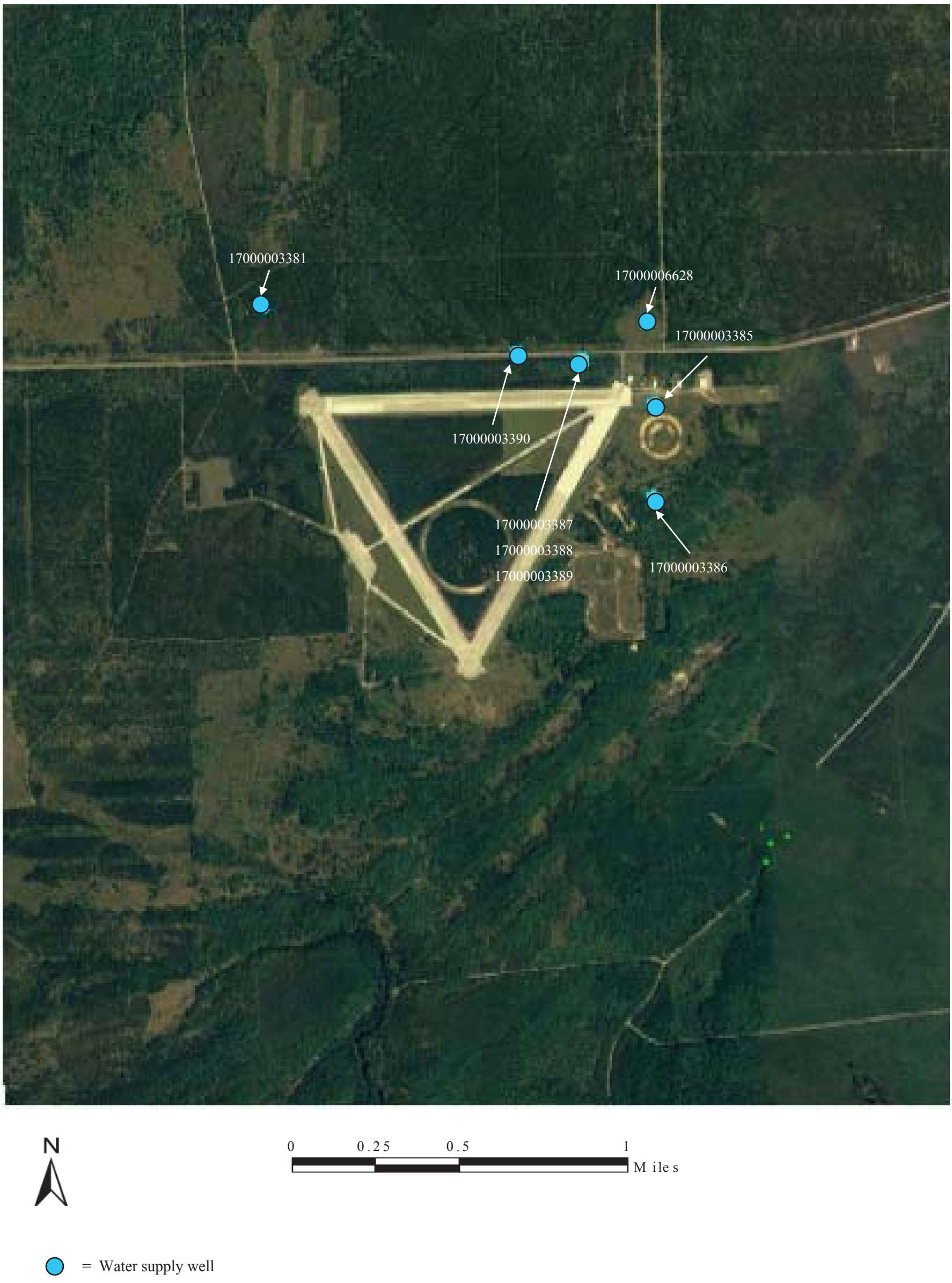

Source: 2005 orthoimagery - Michigan Center for Geographic Information

Figure 3-5. Water supply wells – one mile radius.

Raco Army Airfield and Bomarc Missile Site
Raco, Michigan

U.S. Army Corps of Engineers
Louisville District

GEO Consultants, LLC
A Geological Engineering and Environmental Services Company
Kevil, Kentucky

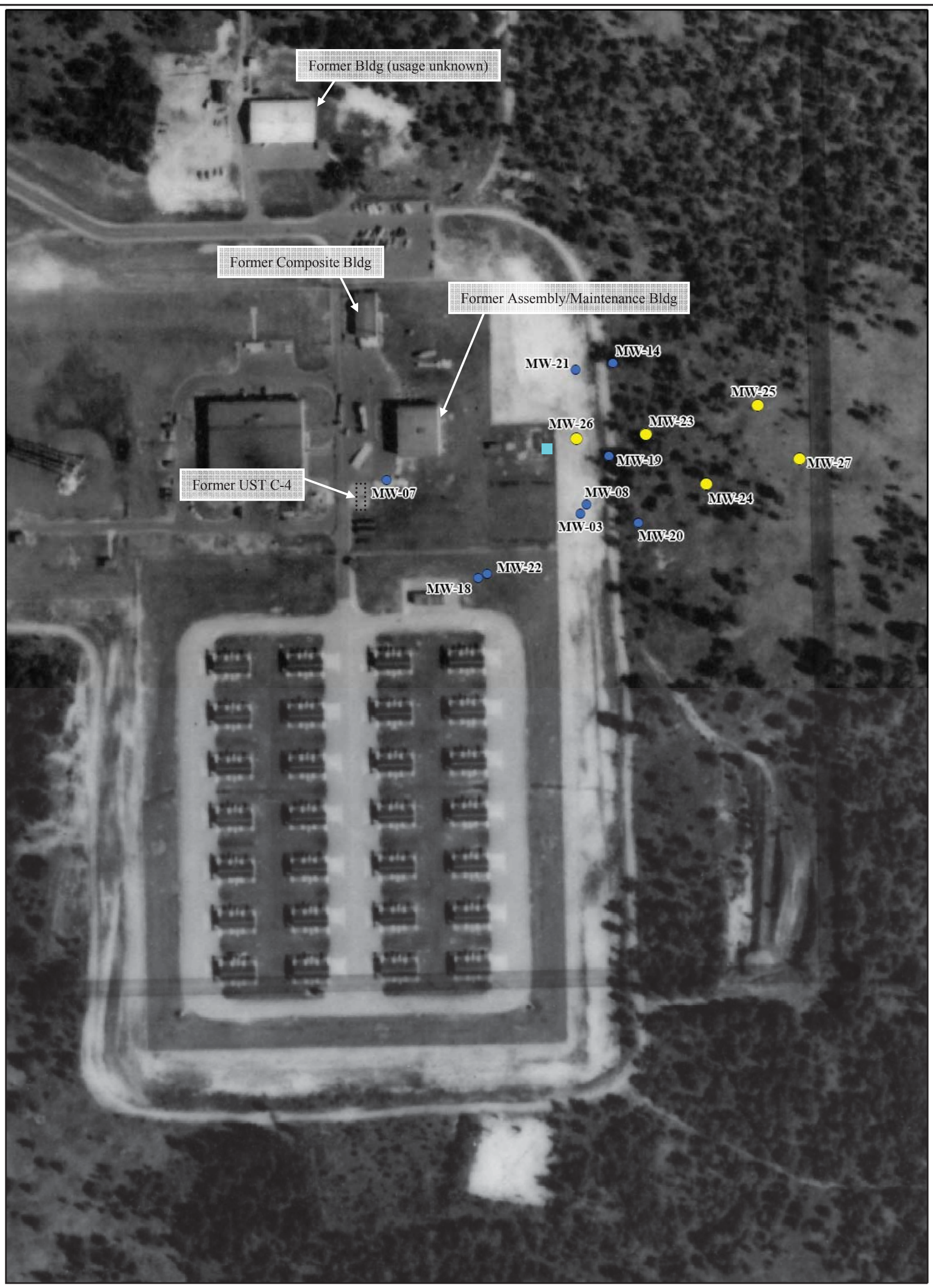

N

0 150 300 600 Feet

= Monitoring well – new
= Monitoring well – pre-existing
= Former wastewater treatment lagoon (approximate)

Source: Michigan Department of Environmental Quality (1972 aerial photograph)

Figure 4-1. 1972 Aerial photograph.

Raco Army Airfield and Bomarc Missile Site
Raco, Michigan

U.S. Army Corps of Engineers
Louisville District

GEO Consultants, LLC
A Geological Engineering and Environmental Services Company
Kevil, Kentucky

APPENDIX B

MONITORING WELL INSTALLATION DIAGRAMS AND VAP BORING LOGS

Site: Raco Army Airfield and Bomarc Missile Site	Installation: Above Ground Completion	Well No. MW-23
Client: USACE– Louisville District	Contract No./Task Order No.: W912QR-08-D-0014/0007	
Contractor: GEO Consultants, LLC	Drill Contractor: Boart Longyear	
Start Date: 9/26/09 End Date: 9/26/09	Datum: Michigan State Plane North (NAD 83)	
	Coordinates: N 578527.867	
	E 26801410.690	

NOT TO SCALE

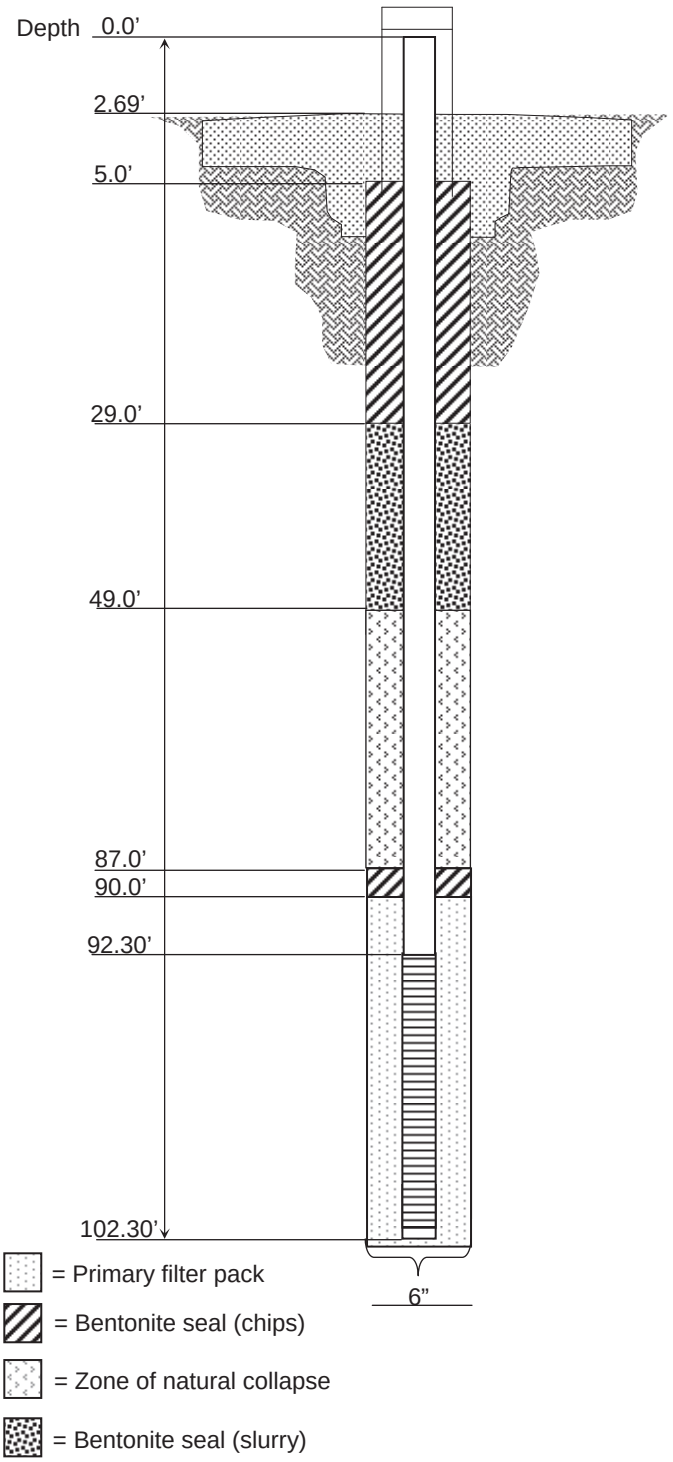

Protective Casing
Material Type: Steel
Diameter: 4 inch square
Depth BGS: 2.0ft Weep Hole? (Y / N): No
Guard Posts (Y / N): Yes - 4
No: 4 Type: 4 inch steel

Surface Pad
Composition and Size: 3 ft x 3 ft Concrete

Riser Pipe
Type: SCH 40 PVC
Diameter: 2 inch
Length (TOC to TOS): 92.30'
Ventilated Cap (Y / N): No

Bentonite Seal (Chips)
Type: ¼ in. bentonite chips
Source: Gold Seal
Amt. Used: 200#
Depth BTOC: 5.0' – 29' and 87.0' – 90.0'
Setup/Hydration Time: 1.5 hour Vol. Fluid Added: 60 gal
Tremied (Y / N): No

Bentonite Seal (Slurry)
Type: Portland Cement and Holeplug Gel
Source: Gold Seal
Amt. Used: 282# Portland Cement, 50# Holeplug Gel
Depth BTOC: 29.0' - 49.0'
Tremied (Y / N): Yes

Zone of Natural Collapse
Type: Sand with trace gravel
Depth BTOC: 49.0' - 87.0'
Setup/Hydration Time: 1.5 hour
Tremied (Y / N): No

Primary Filter Pack
Graduation Designation: 10/20 mesh
Grain Size: #5
Source: Global Drilling Supplies
Amt. Used: 300#
Tremied (Y / N): No

Screen
Type: Type 301 Stainless Steel
Diameter: 2 in.
Length: 10 ft
Slot Size and Type: 0.010 inch wire wrap
Interval Below TOC: 92.30' – 102.30'

U.S. Army Corps of Engineers
Louisville District

MW-23 Monitoring Well Construction Log

GEO Consultants, LLC
A Geological Engineering and Environmental Services Company
Kevil, Kentucky

Site: Raco Army Airfield and Bomarc Missile Site	Installation: Above Ground Completion	Well No. MW-24
Client: USACE– Louisville District	Contract No./Task Order No.: W912QR-08-D-0014/0007	
Contractor: GEO Consultants, LLC	Drill Contractor: Boart Longyear	
Start Date: 9/30/09 End Date: 9/30/09	Datum: Michigan State Plane North (NAD 83)	
	Coordinates: N 578443.124	
	E 26801510.552	

NOT TO SCALE

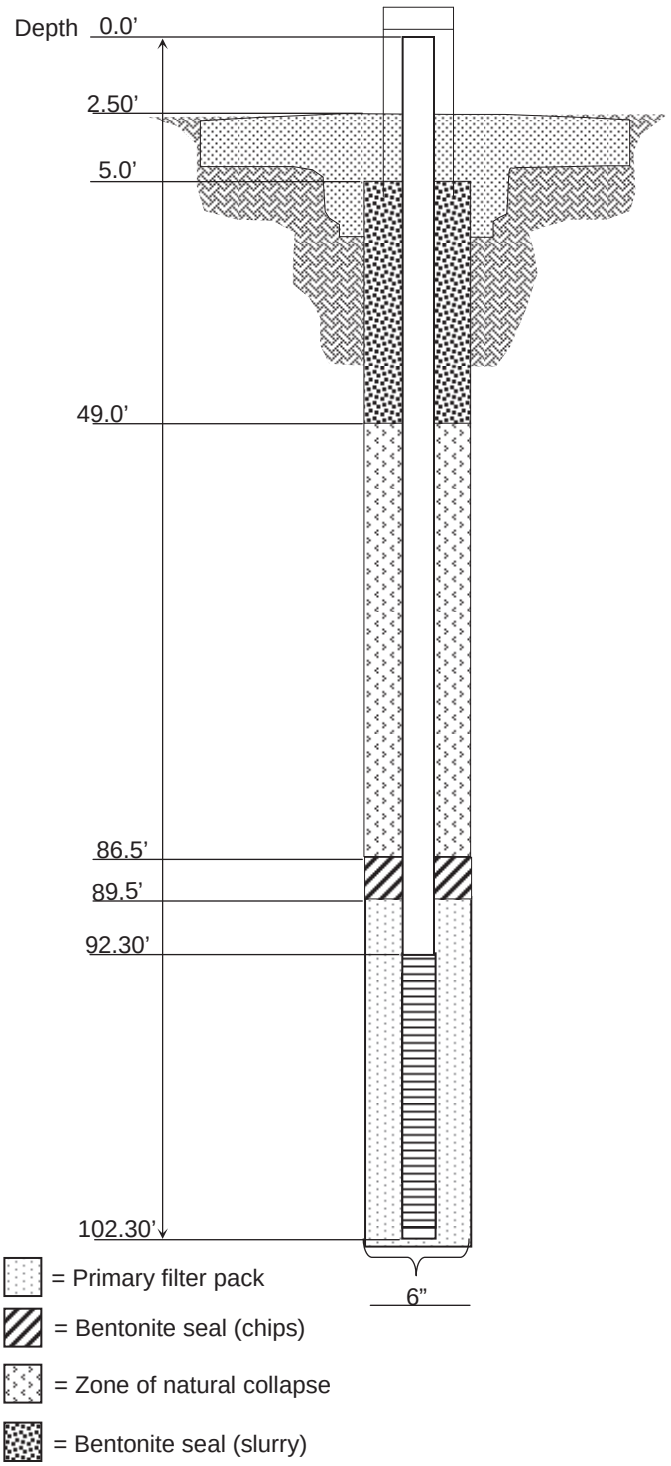

Protective Casing
Material Type: Steel
Diameter: 4 inch square
Depth BGS: 2.0ft Weep Hole? (Y / N): No
Guard Posts (Y / N): Yes
No: 4 Type: 4 inch steel

Surface Pad
Composition and Size: 3 ft x 3 ft Concrete

Riser Pipe
Type: SCH 40 PVC
Diameter: 2 inch
Length (TOC to TOS): 92.30'
Ventilated Cap (Y / N): No

Bentonite Seal (Slurry)
Type: Portland Cement and Holeplug Gel
Source: Gold Seal
Amt. Used: 470# Portland Cement, 50# Holeplug Gel
Depth BTOC: 5.0ft to 49.0ft
Tremied (Y / N): Yes

Zone of Natural Collapse
Type: Sand with trace gravel
Depth BTOC: 49.0' – 86.5'
Setup/Hydration Time: 1.5 hour
Tremied (Y / N): No

Bentonite Seal (Chips)
Type: ¼ in. bentonite chips
Source: Gold Seal
Amt. Used: 50#
Depth BGS: 86.5' – 89.5'
Setup/Hydration Time: 0.5 hour Vol. Fluid Added: 0.0 gal
Tremied (Y / N): No

Primary Filter Pack
Graduation Designation: 10/20 mesh
Grain Size: #5
Source: Global Drilling Supplies
Amt. Used: 300#
Tremied (Y / N): No

Screen
Type: Type 301 Stainless Steel
Diameter: 2 in.
Length: 10 ft
Slot Size and Type: 0.010 inch wire wrap
Interval Below TOC: 92.30' – 102.30'

U.S. Army Corps of Engineers
Louisville District

MW-24 Monitoring Well Construction Log

GEO Consultants, LLC
A Geological Engineering and Environmental Services Company
Kevil, Kentucky

Site: Raco Army Airfield and Bomarc Missile Site	Installation: Above Ground Completion	Well No. MW-25
Client: USACE– Louisville District	Contract No./Task Order No.: W912QR-08-D-0014/0007	
Contractor: GEO Consultants, LLC	Drill Contractor: Boart Longyear	
Start Date: 10/6/09 End Date: 10/6/09	Datum: Michigan State Plane North (NAD 83)	
	Coordinates: N 578579.614	
	E 26801602.395	

NOT TO SCALE

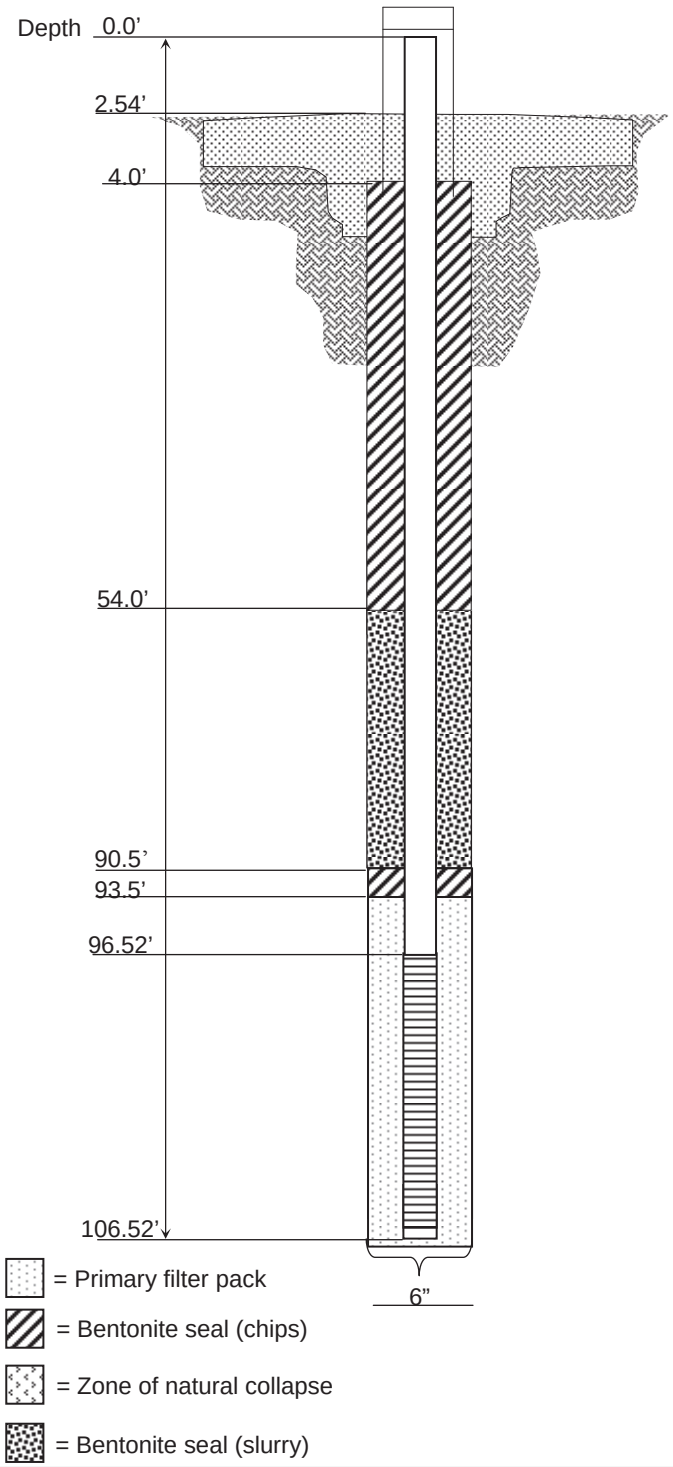

Protective Casing
Material Type: Steel
Diameter: 4 inch square
Depth BGS: 2.0ft Weep Hole? (Y / N): No
Guard Posts (Y / N): Yes
No: 4 Type: 4 inch steel

Surface Pad
Composition and Size: 3 ft x 3 ft Concrete

Riser Pipe
Type: SCH 40 PVC
Diameter: 2 inch
Length (TOC to TOS): 96.52'
Ventilated Cap (Y / N): No

Bentonite Seal (Chips)
Type: ¼ in. bentonite chips
Source: Gold Seal
Amt. Used: 650#
Depth BTOC: 4.0ft to 54.0ft and 90.5' – 93.5'
Setup/Hydration Time: 1 hour Vol. Fluid Added: 60 gal
Tremied (Y / N): No

Bentonite Seal (Slurry)
Type: Portland Cement and Holeplug Gel
Source: Gold Seal
Amt. Used: 282# Portland Cement, 50# Holeplug Gel
Depth BTOC: 54.0' - 90.5'
Tremied (Y / N): Yes

Primary Filter Pack
Graduation Designation: 10/20 mesh
Grain Size: #5
Source: Global Drilling Supplies
Amt. Used: 300#
Tremied (Y / N): No

Screen
Type: Type 301 Stainless Steel
Diameter: 2 in.
Length: 10 ft
Slot Size and Type: 0.010 inch wire wrap
Interval Below TOC: 96.52' – 106.52'

U.S. Army Corps of Engineers
Louisville District

MW-25 Monitoring Well Construction Log

GEO Consultants, LLC
A Geological Engineering and Environmental Services Company
Kevil, Kentucky

Site: Raco Army Airfield and Bomarc Missile Site	Installation: Above Ground Completion	Well No. MW-26
Client: USACE– Louisville District	Contract No./Task Order No.: W912QR-08-D-0014/0007	
Contractor: GEO Consultants, LLC	Drill Contractor: Boart Longyear	
Start Date: 10/9/09 End Date: 10/9/09	Datum: Michigan State Plane North (NAD 83)	
	Coordinates: N 578518.488	
	E 26801291.213	

NOT TO SCALE

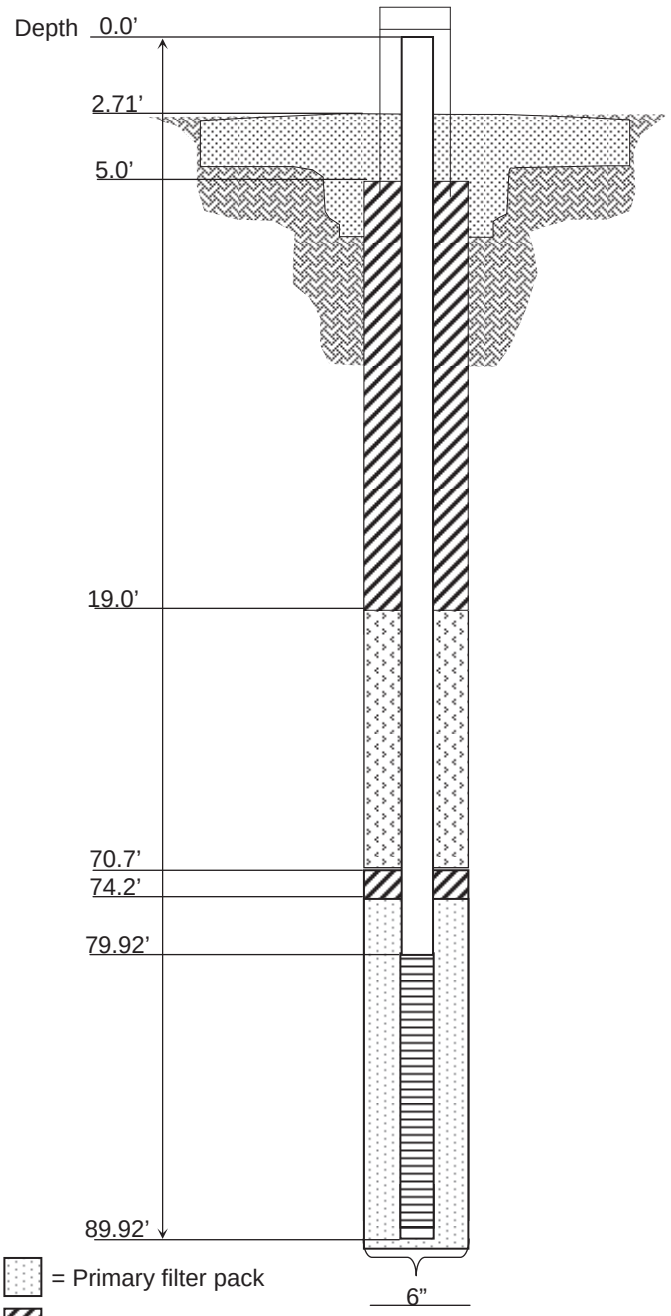

= Primary filter pack

= Bentonite seal (chips)

= Zone of natural collapse

= Bentonite seal (slurry)

Protective Casing
Material Type: Steel
Diameter: 4 inch square
Depth BGS: 2.0ft Weep Hole? (Y / N): No
Guard Posts (Y / N): Yes
No: 4 Type: 4 inch steel

Surface Pad
Composition and Size: 3 ft x 3 ft Concrete

Riser Pipe
Type: SCH 40 PVC
Diameter: 2 inch
Length (TOC to TOS): 79.92'
Ventilated Cap (Y / N): No

Bentonite Seal (Chips)
Type: ¼ in. bentonite chips
Source: Gold Seal
Amt. Used: 300#
Depth BTOC: 5.0' - 19.0' and 70.7' - 74.2'
Setup/Hydration Time: 1 hour Vol. Fluid Added: 25 gal
Tremied (Y / N): No

Zone of Natural Collapse
Type: Sand with trace gravel
Depth BTOC: 19.0' – 70.7'
Tremied (Y / N): No

Primary Filter Pack
Graduation Designation: 10/20 mesh
Grain Size: #5
Source: Global Drilling Supplies
Amt. Used: 300#
Tremied (Y / N): No

Screen
Type: Type 301 Stainless Steel
Diameter: 2 in.
Length: 10 ft
Slot Size and Type: 0.010 inch wire wrap
Interval Below TOC: 79.92' – 89.92'

U.S. Army Corps of Engineers
Louisville District

GEO Consultants, LLC
A Geological Engineering and Environmental Services Company
Kevil, Kentucky

MW-26 Monitoring Well Construction Log

Site: Raco Army Airfield and Bomarc Missile Site	Installation: Above Ground Completion	Well No. MW-27
Client: USACE– Louisville District	Contract No./Task Order No.: W912QR-08-D-0014/0007	
Contractor: GEO Consultants, LLC	Drill Contractor: Boart Longyear	
Start Date: 10/9/09 End Date: 10/9/09	Datum: Michigan State Plane North (NAD 83)	
	Coordinates: N 578488.993	
	E 26801675.609	

NOT TO SCALE

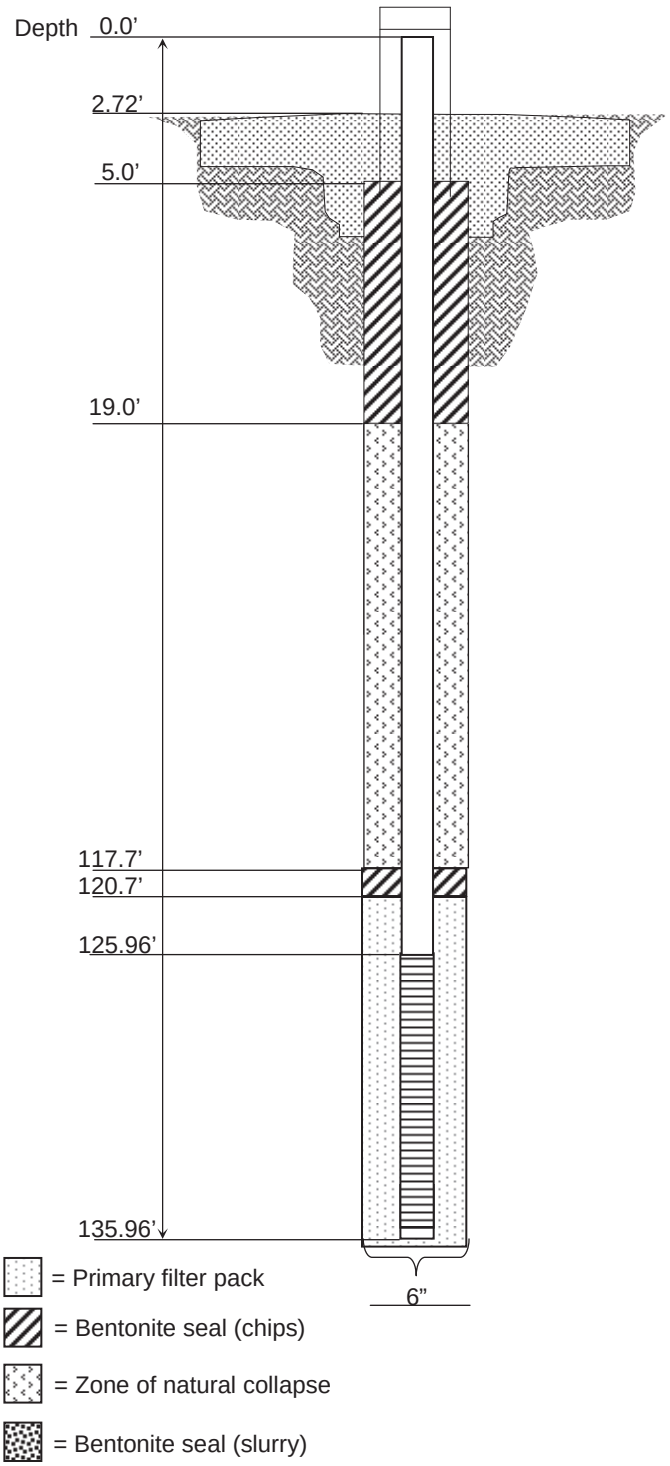

Protective Casing
Material Type: Steel
Diameter: 4 inch square
Depth BGS: 2.0ft Weep Hole? (Y / N): No
Guard Posts (Y / N): Yes
No: 4 Type: 4 inch steel

Surface Pad
Composition and Size: 3 ft x 3 ft Concrete

Riser Pipe
Type: SCH 40 PVC
Diameter: 2 inch
Length (TOC to TOS): 125.96'
Ventilated Cap (Y / N): No

Bentonite Seal (Chips)
Type: ¼ in. bentonite chips
Source: Gold Seal
Amt. Used: 600#
Depth BTOC: 5.0' - 19.0' and 117.7' - 120.7'
Setup/Hydration Time: 1.5 hour Vol. Fluid Added: 25 gal
Tremied (Y / N): No

Zone of Natural Collapse
Type: Sand with trace gravel
Depth BTOC: 19.0' – 117.7'
Tremied (Y / N): No

Primary Filter Pack
Graduation Designation: 10/20 mesh
Grain Size: #5
Source: Global Drilling Supplies
Amt. Used: 300#
Tremied (Y / N): No

Screen
Type: Type 301 Stainless Steel
Diameter: 2 in.
Length: 10 ft
Slot Size and Type: 0.010 inch wire wrap
Interval Below BTOC: 125.96' – 135.96'

U.S. Army Corps of Engineers
Louisville District

MW-27 Monitoring Well Construction Log

GEO Consultants, LLC
A Geological Engineering and Environmental Services Company
Kevil, Kentucky

HTRW DRILLING LOG	DISTRICT: USACE Louisville	HOLE NUMBER VSB-01
1. COMPANY NAME: GEO Consultants, LLC	2. DRILL SUBCONTRACTOR: Boart Longyear	SHEET __1_ OF _2__

3. PROJECT: RACO Army Air Field RI/FS Activities	4. LOCATION: Raco, MI/ Raco AAF former Missile Battery Area
5. NAME OF DRILLER: Chris Barden	6. MANUFACTURERS DESIGNATION OF DRILL: Sonic Rig
7. SIZES AND TYPES OF DRILLING AND SAMPLING EQUIPMENT: Casing size: 6”; Rotosonic continuous soil sampler	8. HOLE LOCATION: 578507.0 N, 26801343.9 E
	9. SURFACE ELEVATION: 902.7 feet
	10. DATE STARTED: 09/22/09 / 11. DATE COMPLETED: 09/25/09
12. OVERBURDEN THICKNESS = N/A	15. DEPTH GROUNDWATER ENCOUNTERED = 53 feet
13. DEPTH DRILLED INTO ROCK = N/A	16. DEPTH TO WATER AND ELAPSED TIME AFTER DRILLING COMPLETED = N/A
14. TOTAL DEPTH OF HOLE = 57 feet	17. OTHER WATER LEVEL MEASUREMENTS (SPECIFY) = N/A

18. SAMPLES FOR CHEMICAL ANALYSIS	VOC	METALS	OTHER (SPECIFY)	OTHER (SPECIFY)	OTHER (SPECIFY)
	0	N/A	N/A		

19. DISPOSITION OF HOLE	BACKFILLED	MONITORING WELL	OTHER (SPECIFY)	20. SIGNATURE OF INSPECTOR
	X			

LOCATION SKETCH/COMMENTS SCALE: Not to scale

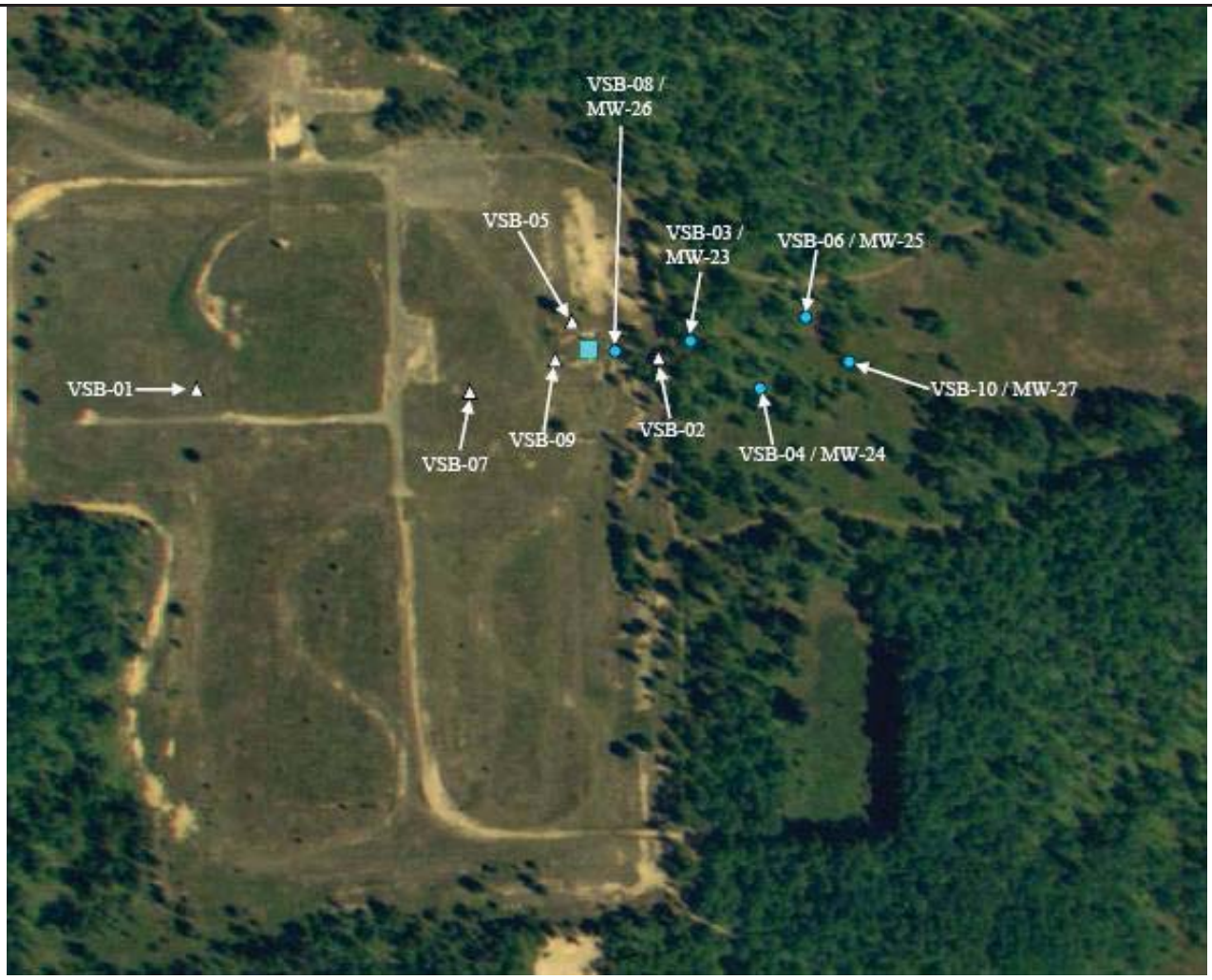

HTRW DRILLING LOG

HOLE NUMBER: **VSB-01**

PROJECT: **Raco AAF RI/FS Activities**

GEOLOGIST: **B. Watkins / P. Lewers**

ELEV. (A)	DEPTH (B)	DESCRIPTION OF MATERIALS (C)	Depth to Groundwater (D)	TCE Concentrations Per Mobile Lab results	PID Screening Results	REMARKS (G)
902.7		Top Soil – 0 – 0.5 feet Fine-grained sand, gray-brown trace silt, gravel, well-sorted (SP)				
	10'					
	20'					
	30'					
	40'					
	50'		▽ 53.0'			
	60'					Bottom of hole – 57 feet No soil/GW samples submitted for analysis.

HTRW DRILLING LOG	DISTRICT: USACE Louisville	HOLE NUMBER VSB-02
1. COMPANY NAME: GEO Consultants, LLC	2. DRILL SUBCONTRACTOR: Boart Longyear	SHEET 1 OF 2

3. PROJECT: RACO Army Air Field RI/FS Activities	4. LOCATION: Raco, MI/ Raco AAF former Missile Battery Area
5. NAME OF DRILLER: Chris Barden	6. MANUFACTURERS DESIGNATION OF DRILL: Sonic Rig
7. SIZES AND TYPES OF DRILLING AND SAMPLING EQUIPMENT: Casing size: 6”; Groundwater push ahead sampler	8. HOLE LOCATION: 578507.0 N, 26801343.9 E
Rotosonic continuous soil sampler	9. SURFACE ELEVATION: 904.8 feet
	10. DATE STARTED: 09/22/09 / 11. DATE COMPLETED: 09/25/09
12. OVERBURDEN THICKNESS = N/A	15. DEPTH GROUNDWATER ENCOUNTERED = 49 feet
13. DEPTH DRILLED INTO ROCK = N/A	16. DEPTH TO WATER AND ELAPSED TIME AFTER DRILLING COMPLETED = N/A
14. TOTAL DEPTH OF HOLE = 127 feet	17. OTHER WATER LEVEL MEASUREMENTS (SPECIFY) = N/A

18. SAMPLES FOR CHEMICAL ANALYSIS	VOC	METALS	OTHER (SPECIFY)	OTHER (SPECIFY)	OTHER (SPECIFY)
	9	N/A	N/A		

19. DISPOSITION OF HOLE	BACKFILLED	MONITORING WELL	OTHER (SPECIFY)	20. SIGNATURE OF INSPECTOR
	X			

LOCATION SKETCH/COMMENTS

SCALE: Not to scale

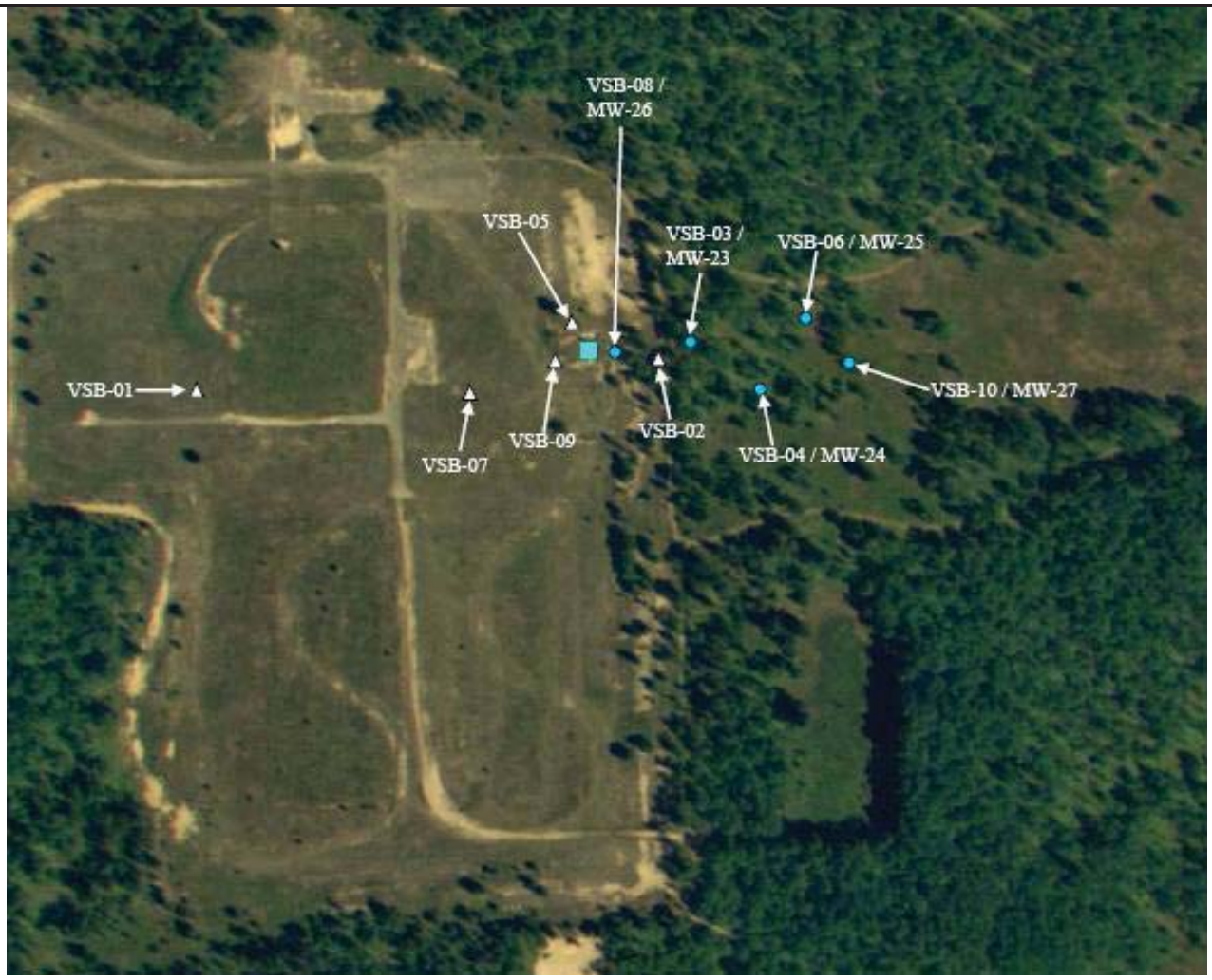

HTRW DRILLING LOG

HOLE NUMBER: **VSB-02**

PROJECT: **Raco AAF RI/FS Activities**

GEOLOGIST: **B. Watkins / P. Lewers**

ELEV. (A)	DEPTH (B)	DESCRIPTION OF MATERIALS (C)	Depth to Groundwater (D)	TCE Concentrations Per Mobile Lab results	PID Screening Results	REMARKS (G)
904.8		Top Soil – 0 – 0.5 feet Fine-grained sand, gray-brown, trace silt, gravel, well-sorted (SP)				
	10'					
	20'					
	30'					
	40'					
	50'		▽ 49.0'	ND		
	60'			ND		
	70'			3.3 (µg/L)		
	80'			1.8 (µg/L)		
		Very fine-grained sand, brown-gray, trace silt and clay Well-sorted, wet (SP)				
	90'			6.2 (µg/L)		
		Fine-grained sand, gray-brown, trace silt, gravel, well-sorted (SP)				
	100'			1.3 (µg/L)		
	110'			ND		
	120'			ND		
				ND		
	130'					Bottom of hole - 127 feet. No soil samples submitted for analysis.

HTRW DRILLING LOG	DISTRICT: USACE Louisville	HOLE NUMBER VSB-03
1. COMPANY NAME: GEO Consultants, LLC	2. DRILL SUBCONTRACTOR: Boart Longyear	SHEET 1 OF 2

3. PROJECT: RACO Army Air Field RI/FS Activities	4. LOCATION: Raco, MI/ Raco AAF former Missile Battery Area
5. NAME OF DRILLER: Chris Barden	6. MANUFACTURERS DESIGNATION OF DRILL: Sonic Rig
7. SIZES AND TYPES OF DRILLING AND SAMPLING EQUIPMENT: Casing size: 6”; Groundwater push ahead sampler; Rotosonic continuous soil sampler	8. HOLE LOCATION: 578527.876 N, 26801410.690 E
	9. SURFACE ELEVATION: 906.6 feet
	10. DATE STARTED: 09/25/09 / 11. DATE COMPLETED: 09/26/09
12. OVERBURDEN THICKNESS = N/A	15. DEPTH GROUNDWATER ENCOUNTERED = 53.24 feet
13. DEPTH DRILLED INTO ROCK = N/A	16. DEPTH TO WATER AND ELAPSED TIME AFTER DRILLING COMPLETED = N/A
14. TOTAL DEPTH OF HOLE = 127 feet	17. OTHER WATER LEVEL MEASUREMENTS (SPECIFY) = N/A

18. SAMPLES FOR CHEMICAL ANALYSIS	VOC	METALS	OTHER (SPECIFY)	OTHER (SPECIFY)	OTHER (SPECIFY)
	8	N/A	N/A		

19. DISPOSITION OF HOLE	BACKFILLED	MONITORING WELL	OTHER (SPECIFY)	20. SIGNATURE OF INSPECTOR
		MW-23		

LOCATION SKETCH/COMMENTS SCALE: Not to scale

HTRW DRILLING LOG

HOLE NUMBER: **VSB-03**

PROJECT: **Raco AAF RI/FS Activities**

GEOLOGIST: **B. Watkins / P. Lewers**

ELEV. (A)	DEPTH (B)	DESCRIPTION OF MATERIALS (C)	Depth to Groundwater (D)	TCE Concentrations Per Mobile Lab results	PID Screening Results	REMARKS (G)
906.6		Top Soil – 0 – 0.5 feet Fine-grained sand, gray-brown, trace silt, gravel, well-sorted (SP)				Completed as MW-23 .
	10'					
	20'					
	30'					
	40'					
	50'					
			▽ 53.24'			
	60'			ND		
	70'			ND		
	80'			1.1 (µg/L)		
	90'			5.0 (µg/L)		
	100'	Very fine-grained sand, brown-gray, trace silt and clay Well-sorted, wet (SP)		60.0 (µg/L)		
	110'	Fine-grained sand, gray-brown, trace silt, gravel, well-sorted (SP)		9.3 (µg/L)		
	120'			2.1 (µg/L)		
				ND		
	130'					Bottom of hole - 127 feet. No soil samples submitted for analysis.

HTRW DRILLING LOG	DISTRICT: USACE Louisville	HOLE NUMBER VSB-04
1. COMPANY NAME: GEO Consultants, LLC	2. DRILL SUBCONTRACTOR: Boart Longyear	SHEET 1 OF 2

3. PROJECT: RACO Army Air Field RI/FS Activities	4. LOCATION: Raco, MI/ Raco AAF former Missile Battery Area
5. NAME OF DRILLER: Chris Barden	6. MANUFACTURERS DESIGNATION OF DRILL: Sonic Rig
7. SIZES AND TYPES OF DRILLING AND SAMPLING EQUIPMENT: Casing size: 6”; Groundwater push ahead sampler; Rotosonic continuous soil sampler	8. HOLE LOCATION: 578443.124 N, 26801515.552 E
	9. SURFACE ELEVATION: 905.4 feet
	10. DATE STARTED: 10/08/09 / 11. DATE COMPLETED: 10/08/09
12. OVERBURDEN THICKNESS = N/A	15. DEPTH GROUNDWATER ENCOUNTERED: 52.14 feet
13. DEPTH DRILLED INTO ROCK= N/A	16. DEPTH TO WATER AND ELAPSED TIME AFTER DRILLING COMPLETED = N/A
14. TOTAL DEPTH OF HOLE 117 feet	17. OTHER WATER LEVEL MEASUREMENTS (SPECIFY) = N/A

18. SAMPLES FOR CHEMICAL ANALYSIS	VOC	METALS	OTHER (SPECIFY)	OTHER (SPECIFY)	OTHER (SPECIFY)
	7	N/A	N/A		

19. DISPOSITION OF HOLE	BACKFILLED	MONITORING WELL	OTHER (SPECIFY)	20. SIGNATURE OF INSPECTOR
		MW-24		

LOCATION SKETCH/COMMENTS SCALE: Not to scale

HTRW DRILLING LOG

HOLE NUMBER: **VSB-04**

PROJECT: **Raco AAF RI/FS Activities**

GEOLOGIST: **B. Watkins / P. Lewers**

ELEV. (A)	DEPTH (B)	DESCRIPTION OF MATERIALS (C)	Depth to Groundwater (D)	TCE Concentrations Per Mobile Lab results	PID Screening Results	REMARKS (G)
905.4		Top Soil – 0 – 0.5 feet Fine-grained sand, gray-brown, trace silt, gravel, well-sorted (SP)				Completed as MW-24
	10'					
	20'					
	30'					
	40'					
	50'		▽ 52.14'			
	60'			ND		
	70'			ND		
	80'			ND		
	90'			3.3 (µg/L)		
	100'			12.0 (µg/L)		
	110'			9.2 (µg/L)		
				ND		
	120'					Bottom of hole - 117 feet. No soil samples submitted for analysis.

HTRW DRILLING LOG	DISTRICT: USACE Louisville	HOLE NUMBER VSB-05
1. COMPANY NAME: GEO Consultants, LLC	2. DRILL SUBCONTRACTOR: Boart Longyear	SHEET 1 OF 2

3. PROJECT: RACO Army Air Field RI/FS Activities	4. LOCATION: Raco, MI/ Raco AAF former Missile Battery Area
5. NAME OF DRILLER: Chris Barden	6. MANUFACTURERS DESIGNATION OF DRILL: Sonic Rig
7. SIZES AND TYPES OF DRILLING AND SAMPLING EQUIPMENT: Casing size: 6”; Groundwater push ahead sampler; Rotosonic continuous soil sampler	8. HOLE LOCATION: 578552.600 N, 26801194.000 E
	9. SURFACE ELEVATION: 904.3 feet
	10. DATE STARTED: 09/30/09 / 11. DATE COMPLETED: 10/01/09
12. OVERBURDEN THICKNESS = N/A	15. DEPTH GROUNDWATER ENCOUNTERED = N/A
13. DEPTH DRILLED INTO ROCK = N/A	16. DEPTH TO WATER AND ELAPSED TIME AFTER DRILLING COMPLETED = N/A
14. TOTAL DEPTH OF HOLE = 117 feet	17. OTHER WATER LEVEL MEASUREMENTS (SPECIFY) = N/A

18. SAMPLES FOR CHEMICAL ANALYSIS	VOC	METALS	OTHER (SPECIFY)	OTHER (SPECIFY)	OTHER (SPECIFY)
	7	N/A	N/A		

19. DISPOSITION OF HOLE	BACKFILLED	MONITORING WELL	OTHER (SPECIFY)	20. SIGNATURE OF INSPECTOR
	X			

LOCATION SKETCH/COMMENTS

SCALE: Not to scale

HTRW DRILLING LOG

HOLE NUMBER: **VSB-05**

PROJECT: **Raco AAF RI/FS Activities**

GEOLOGIST: **B. Watkins / P. Lewers**

ELEV. (A)	DEPTH (B)	DESCRIPTION OF MATERIALS (C)	Depth to Groundwater (D)	TCE Concentrations Per Mobile Lab results	PID Screening Results	REMARKS (G)
904.3		Top Soil – 0 – 0.5 feet Fine-grained sand, gray-brown, trace silt, gravel, well-sorted (SP)				
	10'					
	20'					
	30'					
	40'					
	50'					
	60'			ND		
	70'			ND		
	80'			ND		MS/MSD GW sample taken for Mobile Lab.
	90'			ND		
	100'			ND		
	110'			ND		
				ND		
	120'					Bottom of hole - 117 feet. No soil samples submitted for analysis.

HTRW DRILLING LOG	DISTRICT: USACE Louisville	HOLE NUMBER VSB-06
1. COMPANY NAME: GEO Consultants, LLC	2. DRILL SUBCONTRACTOR: Boart Longyear	SHEET ___1_ OF _2__

3. PROJECT: RACO Army Air Field RI/FS Activities	4. LOCATION: Raco, MI/ Raco AAF former Missile Battery Area
5. NAME OF DRILLER: Chris Barden	6. MANUFACTURERS DESIGNATION OF DRILL: Sonic Rig
7. SIZES AND TYPES OF DRILLING AND SAMPLING EQUIPMENT: Casing size: 6”; Groundwater push ahead sampler; Rotosonic continuous soil sampler	8. HOLE LOCATION: 578579.614 N, 26801602.395 E
	9. SURFACE ELEVATION: 905.5 feet
	10. DATE STARTED: 10/05/09 — 11. DATE COMPLETED: 10/06/09
12. OVERBURDEN THICKNESS = N/A	15. DEPTH GROUNDWATER ENCOUNTERED = 52.49 feet
13. DEPTH DRILLED INTO ROCK = N/A	16. DEPTH TO WATER AND ELAPSED TIME AFTER DRILLING COMPLETED = N/A
14. TOTAL DEPTH OF HOLE = 117 feet	17. OTHER WATER LEVEL MEASUREMENTS (SPECIFY) = N/A

18. SAMPLES FOR CHEMICAL ANALYSIS	VOC	METALS	OTHER (SPECIFY)	OTHER (SPECIFY)	OTHER (SPECIFY)
	7	N/A	N/A		

19. DISPOSITION OF HOLE	BACKFILLED	MONITORING WELL	OTHER (SPECIFY)	20. SIGNATURE OF INSPECTOR
		MW-25		

LOCATION SKETCH/COMMENTS — SCALE: Not to scale

HTRW DRILLING LOG

HOLE NUMBER: **VSB-06**

PROJECT: **Raco AAF RI/FS Activities**

GEOLOGIST: **B. Watkins / P. Lewers**

ELEV. (A)	DEPTH (B)	DESCRIPTION OF MATERIALS (C)	Depth to Groundwater (D)	TCE Concentrations Per Mobile Lab results	PID Screening Results	REMARKS (G)
905.5		Top Soil – 0 – 0.5 feet Fine-grained sand, gray-brown, trace silt, gravel, well-sorted (SP)				Completed as MW-25
	10'					
	20'					
	30'					
	40'					
	50'					
			▽ 52.49'			
	60'			ND		
	70'			ND		
	80'			ND		
	90'			ND		
	100'			ND		
	110'			ND		
				ND		
	120'					Bottom of hole - 117 feet. No soil samples submitted for analysis.

HTRW DRILLING LOG	DISTRICT: USACE Louisville	HOLE NUMBER VSB-07
1. COMPANY NAME: GEO Consultants, LLC	2. DRILL SUBCONTRACTOR: Boart Longyear	SHEET ___1_ OF _2__

3. PROJECT: Raco Army Air Field RI/FS Activities	4. LOCATION: Raco, MI/ Raco AAF former Missile Battery Area
5. NAME OF DRILLER: Chris Barden	6. MANUFACTURERS DESIGNATION OF DRILL: Sonic Rig
7. SIZES AND TYPES OF DRILLING AND SAMPLING EQUIPMENT: Casing size: 6”; Groundwater push ahead sampler; Rotosonic continuous soil sampler	8. HOLE LOCATION: 578421.0 N, 26801014.3 E
	9. SURFACE ELEVATION: 905.1 feet
	10. DATE STARTED: 10/06/09 / 11. DATE COMPLETED: 10/08/09
12. OVERBURDEN THICKNESS = N/A	15. DEPTH GROUNDWATER ENCOUNTERED = N/A
13. DEPTH DRILLED INTO ROCK = N/A	16. DEPTH TO WATER AND ELAPSED TIME AFTER DRILLING COMPLETED = N/A
14. TOTAL DEPTH OF HOLE = 107 feet	17. OTHER WATER LEVEL MEASUREMENTS (SPECIFY) = N/A

18. SAMPLES FOR CHEMICAL ANALYSIS	VOC	METALS	OTHER (SPECIFY)	OTHER (SPECIFY)	OTHER (SPECIFY)
	6	N/A	N/A		

19. DISPOSITION OF HOLE	BACKFILLED	MONITORING WELL	OTHER (SPECIFY)	20. SIGNATURE OF INSPECTOR
	X			

LOCATION SKETCH/COMMENTS

SCALE: Not to scale

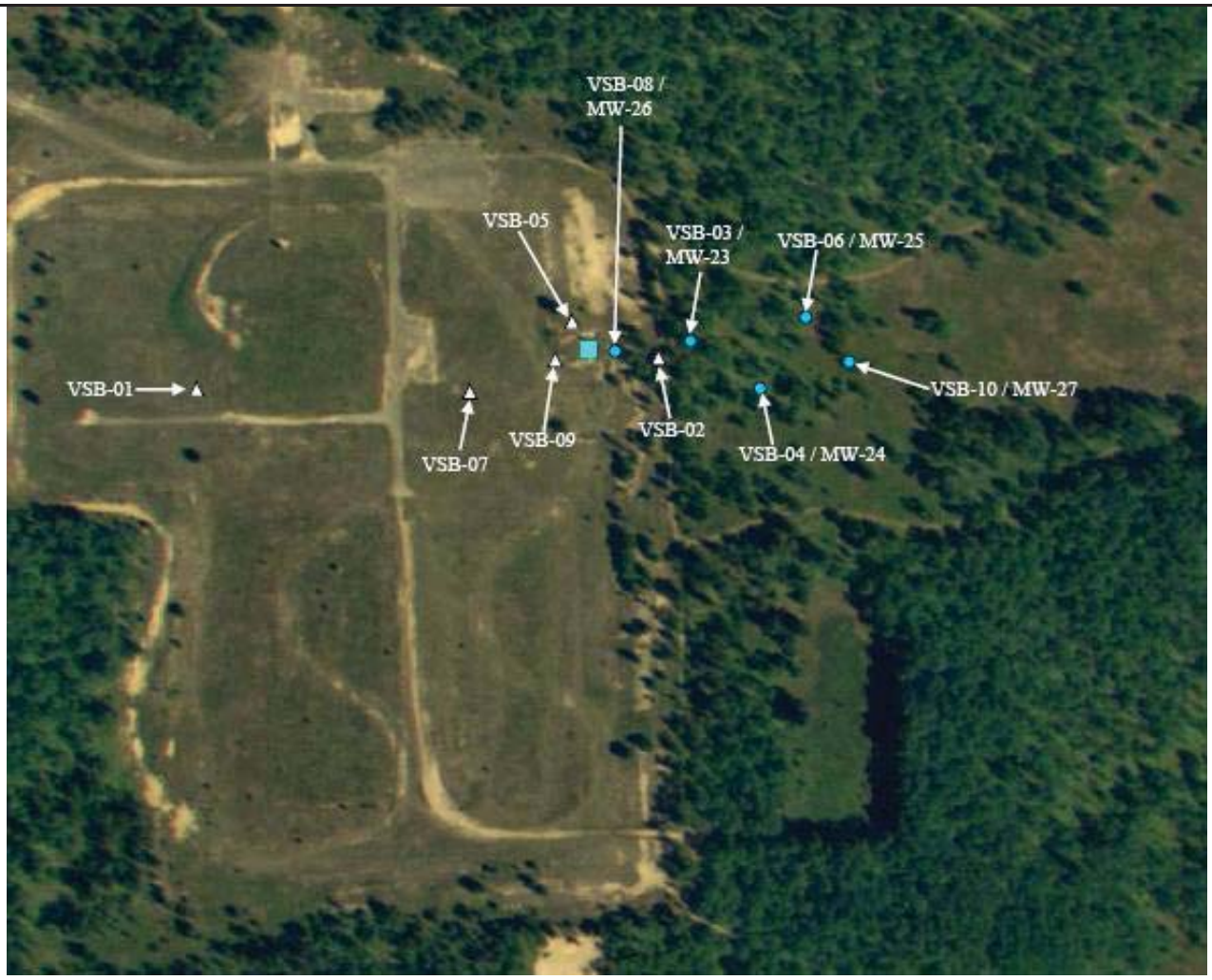

HTRW DRILLING LOG

HOLE NUMBER: **VSB-07**

PROJECT: **Raco AAF – Bomarc Missile Site**

GEOLOGIST: **B. Watkins / P. Lewers**

SHEET 2 OF 2

ELEV. (A)	DEPTH (B)	DESCRIPTION OF MATERIALS (C)	Depth to Groundwater (D)	TCE Concentrations Per Mobile Lab results	PID Screening Results	REMARKS (G)
905.1		Top Soil – 3-6 inches Fine-grained sand, gray-brown, trace silt, gravel, well-sorted (SP)				
	10'					
	20'					
	30'				83 ppm	Soil sample taken analyzed, result ND.
	40'					
	50'					
	60'			ND		
	70'			ND		
	80'			ND		
	90'			ND		
	100'			ND		
				ND		
	110'					Bottom of hole - 107 feet

HTRW DRILLING LOG	DISTRICT: USACE Louisville	HOLE NUMBER VSB-08
1. COMPANY NAME: GEO Consultants, LLC	2. DRILL SUBCONTRACTOR: Boart Longyear	SHEET ___1_ OF _2__

3. PROJECT: Raco Army Air Field RI/FS Activities	4. LOCATION: Raco, MI/ Raco AAF former Missile Battery Area
5. NAME OF DRILLER: Chris Barden	6. MANUFACTURERS DESIGNATION OF DRILL: Sonic Rig
7. SIZES AND TYPES OF DRILLING AND SAMPLING EQUIPMENT: Casing size: 6”; Groundwater push ahead sampler; Rotosonic continuous soil sampler	8. HOLE LOCATION: 578518.488 N, 26801291.213 E
	9. SURFACE ELEVATION: 903.5 feet
	10. DATE STARTED: 10/08/09 / 11. DATE COMPLETED: 10/08/09
12. OVERBURDEN THICKNESS = N/A	15. DEPTH GROUNDWATER ENCOUNTERED = 49.91 feet
13. DEPTH DRILLED INTO ROCK = N/A	16. DEPTH TO WATER AND ELAPSED TIME AFTER DRILLING COMPLETED = N/A
14. TOTAL DEPTH OF HOLE = 117 feet	17. OTHER WATER LEVEL MEASUREMENTS (SPECIFY) = N/A

18. SAMPLES FOR CHEMICAL ANALYSIS	VOC	METALS	OTHER (SPECIFY)	OTHER (SPECIFY)	OTHER (SPECIFY)
	7	N/A	N/A		

19. DISPOSITION OF HOLE	BACKFILLED	MONITORING WELL	OTHER (SPECIFY)	20. SIGNATURE OF INSPECTOR
		MW-26		

LOCATION SKETCH/COMMENTS SCALE: Not to scale

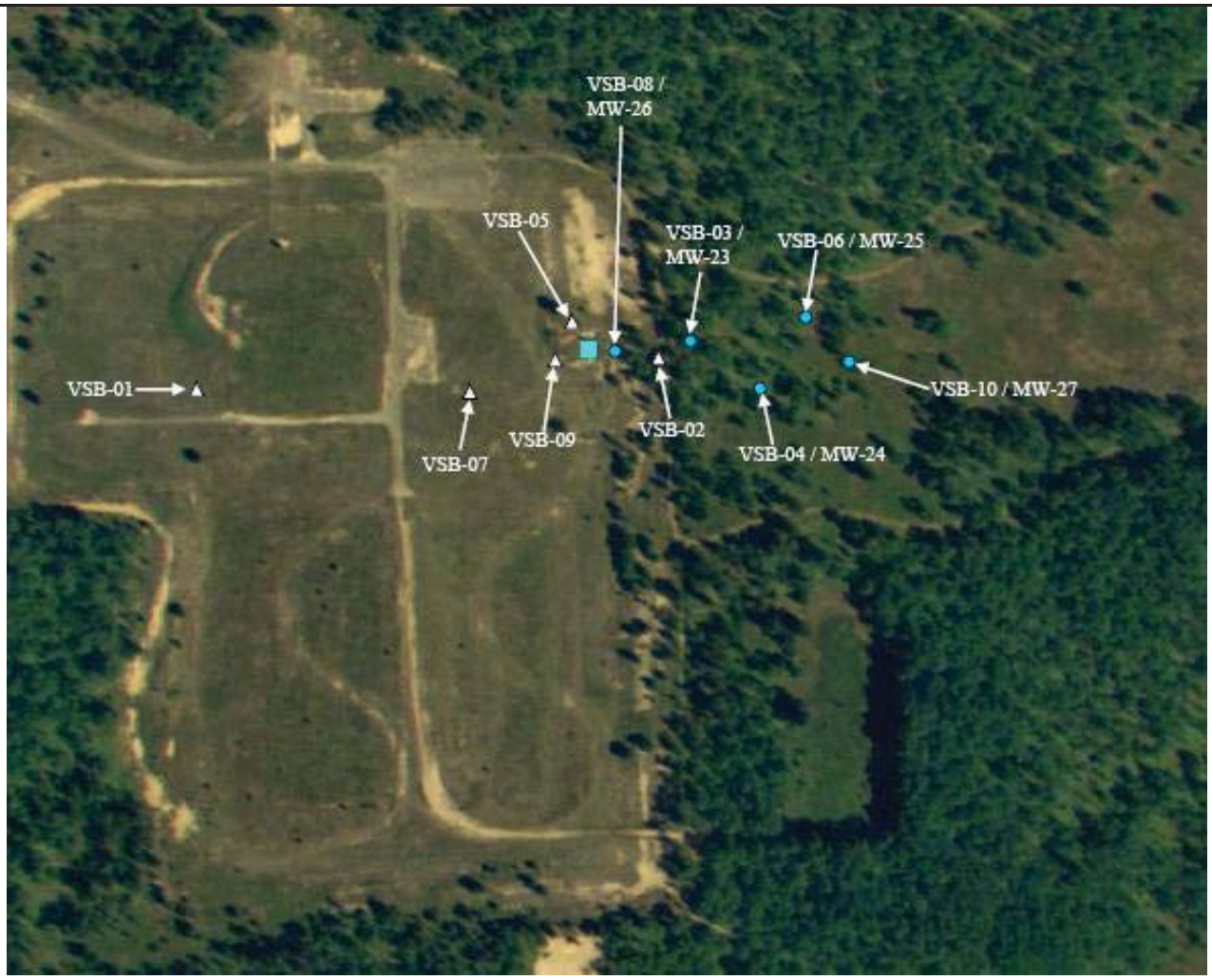

HTRW DRILLING LOG

HOLE NUMBER: **VSB-08**

PROJECT: **Raco AAF RI/FS Activities**

GEOLOGIST: **B. Watkins / P. Lewers**

ELEV. (A)	DEPTH (B)	DESCRIPTION OF MATERIALS (C)	Depth to Groundwater (D)	TCE Concentrations Per Mobile Lab results	PID Screening Results	REMARKS (G)
903.5		Top Soil – 0 – 0.5 feet Fine-grained sand, gray-brown, trace silt, gravel, well-sorted (SP)				Completed as MW-26 Blind drilled to 57 feet.
	10'					
	20'					
	30'					
	40'					
	50'		▽ 49.91'			
	60'			ND		
	70'	Very fine-grained sand, brown-gray, trace silt and clay, Well-sorted, wet (SP)		36.0 (µg/L)		
	80'			67.0 (µg/L)		
	90'	Fine-grained sand, gray-brown, trace silt, gravel, well-sorted (SP)		59.0 (µg/L)		
	100'			4.7 (µg/L)		
	110'			ND		
				ND		
	120'					Bottom of hole - 117 feet. No soil samples submitted for analysis.

HTRW DRILLING LOG	DISTRICT: USACE Louisville	HOLE NUMBER VSB-09
1. COMPANY NAME: GEO Consultants, LLC	2. DRILL SUBCONTRACTOR: Boart Longyear	SHEET ___1_ OF _2__

3. PROJECT: RACO Army Air Field RI/FS Activities	4. LOCATION: Raco, MI/ Raco AAF former Missile Battery Area
5. NAME OF DRILLER: Chris Barden	6. MANUFACTURERS DESIGNATION OF DRILL: Sonic Rig
7. SIZES AND TYPES OF DRILLING AND SAMPLING EQUIPMENT: Casing size: 6”; Groundwater push ahead sampler; Rotosonic continuous soil sampler	8. HOLE LOCATION: 578495.0 N, 26801163.6 E
	9. SURFACE ELEVATION: 904.9 feet
	10. DATE STARTED: 10/09/09 / 11. DATE COMPLETED: 10/09/09
12. OVERBURDEN THICKNESS = N/A	15. DEPTH GROUNDWATER ENCOUNTERED = N/A
13. DEPTH DRILLED INTO ROCK = N/A	16. DEPTH TO WATER AND ELAPSED TIME AFTER DRILLING COMPLETED = N/A
14. TOTAL DEPTH OF HOLE = 87 feet	17. OTHER WATER LEVEL MEASUREMENTS (SPECIFY) = N/A

18. SAMPLES FOR CHEMICAL ANALYSIS	VOC	METALS	OTHER (SPECIFY)	OTHER (SPECIFY)	OTHER (SPECIFY)
	3	N/A	N/A		

19. DISPOSITION OF HOLE	BACKFILLED	MONITORING WELL	OTHER (SPECIFY)	20. SIGNATURE OF INSPECTOR
	X			

LOCATION SKETCH/COMMENTS

SCALE: Not to scale

HTRW DRILLING LOG

HOLE NUMBER: **VSB-09**

PROJECT: **Raco AAF RI/FS Activities**

GEOLOGIST: **B. Watkins / P. Lewers**

SHEET 2 OF 2

ELEV. (A)	DEPTH (B)	DESCRIPTION OF MATERIALS (C)	Depth to Groundwater (D)	TCE Concentrations Per Mobile Lab results	PID Screening Results	REMARKS (G)
904.9		Top Soil – 0 – 0.5 feet Fine-grained sand, grey-brown, trace silt, gravel, well-sorted (SP)				Blind drilled to 67 feet.
	10'					
	20'					
	30'					
	40'					
	50'					
	60'					
	70'	Very fine-grained sand, brown-gray, trace silt and clay, Well-sorted, wet (SP)		1.9 (µg/L)		
	80'	Fine-grained sand, grey-brown, trace silt, gravel, well-sorted (SP)		ND ND		
	90'					Bottom of hole - 87 feet No soil samples submitted for analysis

HTRW DRILLING LOG	DISTRICT: USACE Louisville	HOLE NUMBER VSB-10
1. COMPANY NAME: GEO Consultants, LLC	2. DRILL SUBCONTRACTOR: Boart Longyear	SHEET ___1_ OF _2__

3. PROJECT: Raco Army Air Field RI/FS Activities	4. LOCATION: Raco, MI/ Raco AAF former Missile Battery Area
5. NAME OF DRILLER: Chris Barden	6. MANUFACTURERS DESIGNATION OF DRILL: Sonic Rig
7. SIZES AND TYPES OF DRILLING AND SAMPLING EQUIPMENT: Casing size: 6”; Groundwater push ahead sampler; Rotosonic continuous soil sampler	8. HOLE LOCATION: 578488.993 N, 26801675.609 E
	9. SURFACE ELEVATION: 903.6 feet
	10. DATE STARTED: 10/09/09 / 11. DATE COMPLETED: 10/10/09
12. OVERBURDEN THICKNESS = N/A	15. DEPTH GROUNDWATER ENCOUNTERED = 51.27 feet
13. DEPTH DRILLED INTO ROCK = N/A	16. DEPTH TO WATER AND ELAPSED TIME AFTER DRILLING COMPLETED = N/A
14. TOTAL DEPTH OF HOLE = 157 feet	17. OTHER WATER LEVEL MEASUREMENTS (SPECIFY) = N/A

18. SAMPLES FOR CHEMICAL ANALYSIS	VOC	METALS	OTHER (SPECIFY)	OTHER (SPECIFY)	OTHER (SPECIFY)
	7	N/A	N/A		

19. DISPOSITION OF HOLE	BACKFILLED	MONITORING WELL	OTHER (SPECIFY)	20. SIGNATURE OF INSPECTOR
		MW-27		

LOCATION SKETCH/COMMENTS SCALE: Not to scale

HTRW DRILLING LOG

HOLE NUMBER: **VSB-10**

PROJECT: **Raco AAF RI/FS Activities**

GEOLOGIST: **B. Watkins / P. Lewers**

ELEV. (A)	DEPTH (B)	DESCRIPTION OF MATERIALS (C)	Depth to Groundwater (D)	TCE Concentrations Per Mobile Lab results	PID Screening Results	REMARKS (G)
903.6		Top Soil – 0 – 0.5 feet Fine-grained sand, gray-brown, trace silt, gravel, well-sorted (SP)				Completed as MW-27 Blind drilled to 77 feet..
	10’					
	20’					
	30’					
	40’					
	50’		▽ 51’			
	60’					
	70’			ND		
	80’					
	90’			ND		
	100’			ND		
	110’			1.9 (µg/L)		
		Very fine-grained sand, brown-gray, trace silt and clay, Well-sorted, wet (SP)				
	120’			32.0 (µg/L)		
	130’			61.0 (µg/L)		
		Fine-grained sand, gray-brown, trace silt, gravel, well-sorted (SP)				
	140’			ND		
	150’			2.4 (µg/L)		
				1.3 (µg/L)		
	160’					Bottom of hole - 157 feet. No soil samples submitted for analysis.

APPENDIX C

PURGE LOGS; FIELD BOOK PAGES; NORTHWOODS, INC. SURVEY REPORT; WASTE DISPOSAL DOCUMENTATION

Monitoring Well and Vertical Aquifer Profiling Purge Data Sheets

Date	Sample Number	Location	Total Purge Volume (gal)	Total Purge Volume (L)
10/29/2009	RAGW08010910	MW-08	1	3.785

Time	Temperature (°C)	pH (SU)	SpC (mS/cm)	D.O. (mg/L)	ORP (mv)	Turbidity (NTU)
1437	8.13	6.3	0.039	12	356	32.7
1440	8.07	6.11	0.04	12.11	363	22.5
1443	8.05	6.01	0.04	11.99	370	18.1

Date	Sample Number	Location	Total Purge Volume (gal)	Total Purge Volume (L)
10/29/2009	RAGW14010910	MW-14	1	3.785

Time	Temperature (°C)	pH (SU)	SpC (mS/cm)	D.O. (mg/L)	ORP (mv)	Turbidity (NTU)
1538	8.4	7.900	0.016	13.5	342	22.2
1541	8.3	7.640	0.015	13.21	357	18.4
1544	8.37	7.470	0.015	12.88	356	15.4

Date	Sample Number	Location	Total Purge Volume (gal)	Total Purge Volume (L)
10/29/2009	RAGW18010910	MW-18	1	3.785

Time	Temperature (°C)	pH (SU)	SpC (mS/cm)	D.O. (mg/L)	ORP (mv)	Turbidity (NTU)
1420	8.24	7.510	0.062	12.43	294	41.1
1423	7.99	6.920	0.059	12.79	311	27
1426	7.97	6.400	0.058	12.82	331	21

Date	Sample Number	Location	Total Purge Volume (gal)	Total Purge Volume (L)
10/29/2009	RAGW19010910	MW-19	1	3.785

Time	Temperature (°C)	pH (SU)	SpC (mS/cm)	D.O. (mg/L)	ORP (mv)	Turbidity (NTU)
1455	8.02	6.780	0.285	8.79	376	52.9
1458	7.99	7.040	0.286	5.17	370	50
1501	7.98	7.180	0.286	4.42	365	51.2

Date	Sample Number	Location	Total Purge Volume (gal)	Total Purge Volume (L)
10/29/2009	RAGW20010910	MW-20	1	3.785

Time	Temperature (°C)	pH (SU)	SpC (mS/cm)	D.O. (mg/L)	ORP (mv)	Turbidity (NTU)
1516	7.88	8.21	0.114	11.28	346	122
1519	7.87	8.27	0.115	11.6	347	199
1522	7.87	8.28	0.116	11.68	348	160

Date	Sample Number	Location	Total Purge Volume (gal)	Total Purge Volume (L)
10/29/2009	RAGW21010910	MW-21	1	3.785

Time	Temperature (°C)	pH (SU)	SpC (mS/cm)	D.O. (mg/L)	ORP (mv)	Turbidity (NTU)
1608	8.54	7.06	0.126	11.65	362	51.3
1611	8.43	7.02	0.131	11.37	365	39.7
1614	8.43	7.04	0.129	11.23	354	31.2

Date	Sample Number	Location	Total Purge Volume (gal)	Total Purge Volume (L)
10/29/2009	RAGW22010910	MW-22	1	3.785

Time	Temperature (°C)	pH (SU)	SpC (mS/cm)	D.O. (mg/L)	ORP (mv)	Turbidity (NTU)
1407	8.04	7.51	0.222	9.43	269	191
1410	7.99	7.49	0.22	9.34	276	93.5
1413	7.98	7.48	0.219	9.46	281	88.9

Date	Sample Number	Location	Total Purge Volume (gal)	Total Purge Volume (L)
10/28/2009	RAGW23010910	MW-23	1	3.785

Time	Temperature (°C)	pH (SU)	SpC (mS/cm)	D.O. (mg/L)	ORP (mv)	Turbidity (NTU)
1031	7.99	6.760	0.30	4.24	-43	272
1034	8.02	7.100	0.35	2.35	-44	110
1037	8.01	7.100	0.34	2.30	-45	106

Monitoring Well and Vertical Aquifer Profiling Purge Data Sheets

Date	Sample Number	Location	Total Purge Volume (gal)	Total Purge Volume (L)
10/28/2009	RAGW24010910	MW-24	1	3.785

Time	Temperature (°C)	pH (SU)	SpC (mS/cm)	D.O. (mg/L)	ORP (mv)	Turbidity (NTU)
1133	7.80	7.410	0.22	4.04	-255	41.1
1136	7.80	7.420	0.229	1.86	-267	34.1
1139	7.79	7.410	0.228	1.69	-274	31.0

Date	Sample Number	Location	Total Purge Volume (gal)	Total Purge Volume (L)
10/29/2009	RAGW	MW-25	1	3.785

Time	Temperature (°C)	pH (SU)	SpC (mS/cm)	D.O. (mg/L)	ORP (mv)	Turbidity (NTU)
1237	9.24	6.370	0.36	6.79	366	21.4
1240	7.95	11.120	0.67	5.93	278	45.7
1243	7.92	10.990	0.53	5.1	211	13.8

Date	Sample Number	Location	Total Purge Volume (gal)	Total Purge Volume (L)
10/29/2009	RAGW26010910	MW-26	1	3.785

Time	Temperature (°C)	pH (SU)	SpC (mS/cm)	D.O. (mg/L)	ORP (mv)	Turbidity (NTU)
1345	8.32	7.180	0.35	3.6	163	491
1348	8.2	7.190	0.35	2.51	153	106
1351	8.18	7.190	0.34	2.44	145	69.5

Date	Sample Number	Location	Total Purge Volume (gal)	Total Purge Volume (L)
10/29/2009	RAGW27010910	MW-27	1	3.785

Time	Temperature (°C)	pH (SU)	SpC (mS/cm)	D.O. (mg/L)	ORP (mv)	Turbidity (NTU)
1307	7.91	8.29	0.205	11.85	45	1999
1310	7.85	8.05	0.292	6.49	37	341
1313	7.85	7.96	0.3	2.9	22	188

Date	Sample Number	Location	Total Purge Volume (gal)	Total Purge Volume (L)
9/23/2009	RAGWVSB014757010909	VSB01	1.9	7.192283

Time	Temperature (°C)	pH (SU)	SpC (mS/cm)	D.O. (mg/L)	ORP (mv)	Turbidity (NTU)
810	14.75	6.64	0.17	0.59	-76	5999
813	13.67	6.71	0.17	0.31	-174	5999
816	13.17	6.8	0.172	0.32	-158	5999
819	13.04	6.86	0.165	0.46	-91	5999
822	12.96	6.86	0.155	1.04	-32	5999

Date	Sample Number	Location	Total Purge Volume (gal)	Total Purge Volume (L)
9/23/2009	RAGWVSB024757010909	VSB02-47-57	2.9	10.978

Time	Temperature (°C)	pH (SU)	SpC (mS/cm)	D.O. (mg/L)	ORP (mv)	Turbidity (NTU)
1115	18.59	7.23	0.123	147	54	5999
1118	17.57	7.33	0.117	0.23	-136	5999
1123	16.59	7.37	0.114	0.25	-202	5999
1126	15.55	7.35	0.115	0.18	-202	5999
1129	17.17	7.29	0.122	2.96	-1	5999
1132	17.36	7.29	0.124	0.19	-168	5999
1135	17.24	7.29	0.121	0.22	-149	5999

Date	Sample Number	Location	Total Purge Volume (gal)	Total Purge Volume (L)
9/23/2009	RAGWVSB025767010909	VSB02-57-67	2	7.570824

Time	Temperature (°C)	pH (SU)	SpC (mS/cm)	D.O. (mg/L)	ORP (mv)	Turbidity (NTU)
1349	18.66	6.8	0.026	7.09	203	181
1352	18.78	6.75	0.026	6.73	208	137
1355	18.63	6.73	0.024	6.73	213	147

Date	Sample Number	Location	Total Purge Volume (gal)	Total Purge Volume (L)
9/23/2009	RAGWVSB026777010909	VSB02-67-77	2.25	8.5172

Time	Temperature (°C)	pH (SU)	SpC (mS/cm)	D.O. (mg/L)	ORP (mv)	Turbidity (NTU)
1513	17.89	7.01	0.128	6.17	162	48
1516	17.08	6.94	0.13	5.36	160	28.9
1519	16.54	6.94	0.14	5.21	159	28.9
1522	16.33	6.94	0.14	5.36	158	26.6
1525	16.17	6.94	0.128	5.2	159	28

Monitoring Well and Vertical Aquifer Profiling Purge Data Sheets

Date	Sample Number	Location	Total Purge Volume (gal)	Total Purge Volume (L)
9/23/2009	RAGWVSB027787010909	VSB02-77-87	1.5	5.678118

Time	Temperature (°C)	pH (SU)	SpC (mS/cm)	D.O. (mg/L)	ORP (mv)	Turbidity (NTU)
1637	17.79	7.7	0.12	9.45	210	162
1640	17.92	7.68	0.123	6.73	208	154
1643	17.99	7.65	0.125	6.18	203	148
1646	18.16	7.61	0.129	5.99	197	144

Date	Sample Number	Location	Total Purge Volume (gal)	Total Purge Volume (L)
9/23/2009	RAGWVSB028797010909	VSB02-87-97	2.2	8.3279

Time	Temperature (°C)	pH (SU)	SpC (mS/cm)	D.O. (mg/L)	ORP (mv)	Turbidity (NTU)
1809	16.15	7.99	0.012	9.83	207	71.4
1812	15.94	7.96	0.008	8.28	200	70.4
1815	15.82	8.05	0.045	7.98	188	71.4
1818	15.68	7.88	0.15	7.59	177	70.5

Date	Sample Number	Location	Total Purge Volume (gal)	Total Purge Volume (L)
9/24/2009	RAGWVSB0297107010909	VSB02-97-107	1.5	5.678118

Time	Temperature (°C)	pH (SU)	SpC (mS/cm)	D.O. (mg/L)	ORP (mv)	Turbidity (NTU)
832	8.11	7.95	0.122	10.13	250	55.9
835	8.21	7.94	0.12	9.01	253	59.2
838	8.24	7.93	0.121	8.83	257	63.6
841	8.32	7.88	0.121	8.67	259	63

Date	Sample Number	Location	Total Purge Volume (gal)	Total Purge Volume (L)
9/24/2009	RAGWVSB02107117010909	VSB02-107-117	1.5	5.6781

Time	Temperature (°C)	pH (SU)	SpC (mS/cm)	D.O. (mg/L)	ORP (mv)	Turbidity (NTU)
1320	15.48	8.18	0.117	10.67	197	27.2
1323	16.06	8.17	0.1	9.93	212	27.3
1326	16.03	8.18	0.08	10.2	227	28.5

Date	Sample Number	Location	Total Purge Volume (gal)	Total Purge Volume (L)
9/24/2009	RAGWVSB02117127010909	VSB02-117-127	1.3	4.921036

Time	Temperature (°C)	pH (SU)	SpC (mS/cm)	D.O. (mg/L)	ORP (mv)	Turbidity (NTU)
1656	15.25	8.22	0.118	9.91	289	70.1
1659	15.08	8.22	0.112	9.49	298	76
1702	16.44	821	0.112	8.22	305	83

Date	Sample Number	Location	Total Purge Volume (gal)	Total Purge Volume (L)
9/25/2009	RAGWVSB0367010909	VSB03-67	0.5	1.8927

Time	Temperature (°C)	pH (SU)	SpC (mS/cm)	D.O. (mg/L)	ORP (mv)	Turbidity (NTU)
1341	1279	6.2	0.06	8.29	291	636
1344	1262	6.06	0.059	7.26	300	771
1347	1240	5.97	0.058	6.94	309	869

Date	Sample Number	Location	Total Purge Volume (gal)	Total Purge Volume (L)
10/25/2009	RAGWVSB0377010909	VSB03-77	0.5	1.892706

Time	Temperature (°C)	pH (SU)	SpC (mS/cm)	D.O. (mg/L)	ORP (mv)	Turbidity (NTU)
1437	13.35	7.46	0.09	9.41	277	462
1440	12.75	7.79	0.085	6.48	279	402
1443	12.48	6.88	0.135	6.36	281	315

Date	Sample Number	Location	Total Purge Volume (gal)	Total Purge Volume (L)
10/25/2009	RAGWVSB0387010909	VSB03-87	1	3.7854

Time	Temperature (°C)	pH (SU)	SpC (mS/cm)	D.O. (mg/L)	ORP (mv)	Turbidity (NTU)
1538	14.35	7.79	0.153	9.51	271	290
1541	13.16	7.67	0.161	6.43	286	93.9
1544	12.55	7.66	0.103	6.28	298	28.2

Monitoring Well and Vertical Aquifer Profiling Purge Data Sheets

Date	Sample Number	Location	Total Purge Volume (gal)	Total Purge Volume (L)
9/25/2009	RAGWVSB0397010909	VSB03-97	0.5	1.892706

Time	Temperature (°C)	pH (SU)	SpC (mS/cm)	D.O. (mg/L)	ORP (mv)	Turbidity (NTU)
1631	14.93	7.67	0.067	8.3	275	18.4
1634	14.56	7.44	0.098	6.61	300	22.8
1637	13.99	7.19	0.141	4.38	283	244

Date	Sample Number	Location	Total Purge Volume (gal)	Total Purge Volume (L)
9/26/2009	RAGWVSB03117010909	VSB03-117	1.2	4.542494

Time	Temperature (°C)	pH (SU)	SpC (mS/cm)	D.O. (mg/L)	ORP (mv)	Turbidity (NTU)
825	9.8	7.78	0.215	6.32	61	1072
828	9.86	7.81	0.215	3.92	49	885
831	9.88	7.82	0.212	3.78	42	792

Date	Sample Number	Location	Total Purge Volume (gal)	Total Purge Volume (L)
9/25/2009	RAGWVSB0467010909	VSB04-67	0.5	1.892706

Time	Temperature (°C)	pH (SU)	SpC (mS/cm)	D.O. (mg/L)	ORP (mv)	Turbidity (NTU)
1540	20.63	6.9	0.004	6	270	766
1543	20.03	6.61	0.034	5.97	276	512
1546	20.32	6.39	0.005	5.89	284	308

Date	Sample Number	Location	Total Purge Volume (gal)	Total Purge Volume (L)
9/25/2009	RAGWVSB0487010909	VSB04-87	0.9	3.406871

Time	Temperature (°C)	pH (SU)	SpC (mS/cm)	D.O. (mg/L)	ORP (mv)	Turbidity (NTU)
1708	19.44	8.1	0.16	6.53	286	5999
1711	17.64	8.11	0.161	4.73	297	5999
1714	16.79	8.11	0.161	4.2	304	5999

Date	Sample Number	Location	Total Purge Volume (gal)	Total Purge Volume (L)
9/25/2009	RAGWVSB03107010909	VSB03-107	0.6	2.2712

Time	Temperature (°C)	pH (SU)	SpC (mS/cm)	D.O. (mg/L)	ORP (mv)	Turbidity (NTU)
1737	14.35	7.17	0.322	7.68	282	367
1740	14.05	7.18	0.333	6.18	282	379
1743	13.8	7.21	0.273	5.46	282	304

Date	Sample Number	Location	Total Purge Volume (gal)	Total Purge Volume (L)
9/25/2009	RAGWVSB03127010909	VSB03-127	0.5	1.8927

Time	Temperature (°C)	pH (SU)	SpC (mS/cm)	D.O. (mg/L)	ORP (mv)	Turbidity (NTU)
1007	12.78	7.96	0.213	888	174	779
1010	12.74	6.99	0.213	794	193	5999
1013	11.2	8.2	0.147	605	180	5999

Date	Sample Number	Location	Total Purge Volume (gal)	Total Purge Volume (L)
9/29/2009	RAGWVSB0477010909	VSB04-77	0.8	3.0283

Time	Temperature (°C)	pH (SU)	SpC (mS/cm)	D.O. (mg/L)	ORP (mv)	Turbidity (NTU)
1625	23.54	7.35	0.72	5.71	273	2000
1628	21.13	8.24	0.04	5.5	279	2000
1631	20.75	8.37	0.123	5.41	203	5999

Date	Sample Number	Location	Total Purge Volume (gal)	Total Purge Volume (L)
9/29/09	RAGWVSB0497010909	VSB04-97	0.5	1.8927

Time	Temperature (°C)	pH (SU)	SpC (mS/cm)	D.O. (mg/L)	ORP (mv)	Turbidity (NTU)
1753	7.73	7.53	0.208	6.92	316	132
1756	7.79	7.55	0.038	6.33	321	963
1759	7.84	7.58	0.057	6.07	325	77.3

Monitoring Well and Vertical Aquifer Profiling Purge Data Sheets

Date	Sample Number	Location	Total Purge Volume (gal)	Total Purge Volume (L)
9/29/2009	RAGWVSB04107010909	VSB04-107	1.1	4.163953

Time	Temperature (°C)	pH (SU)	SpC (mS/cm)	D.O. (mg/L)	ORP (mv)	Turbidity (NTU)
1833	7.54	7.66	0.127	12.79	305	1328
1836	8.72	7.6	0.262	6.4	297	654
1839	9.39	7.57	0.003	5.67	291	138

Date	Sample Number	Location	Total Purge Volume (gal)	Total Purge Volume (L)
9/29/2009	RAGWVSB04117010909	VSB04-117	0.5	1.8927

Time	Temperature (°C)	pH (SU)	SpC (mS/cm)	D.O. (mg/L)	ORP (mv)	Turbidity (NTU)
1927	8.28	7.53	0.294	8.02	236	5999
1930	8.54	7.51	0.336	5.33	196	5999
1933	8.57	7.51	0.337	5.27	192	5999

Date	Sample Number	Location	Total Purge Volume (gal)	Total Purge Volume (L)
9/30/2009	RAGWVSB0557010909	VSB05-57		

Time	Temperature (°C)	pH (SU)	SpC (mS/cm)	D.O. (mg/L)	ORP (mv)	Turbidity (NTU)
		BAILED				

Date	Sample Number	Location	Total Purge Volume (gal)	Total Purge Volume (L)
9/30/2009	RAGWVSB0567010909	VSB05-67	1	3.7854

Time	Temperature (°C)	pH (SU)	SpC (mS/cm)	D.O. (mg/L)	ORP (mv)	Turbidity (NTU)
1206	12.37	5.77	0	6.58	346	65.5
1209	12.11	3.26	0	6	410	1496
1212	8.34	5.58	0.023	6.63	328	2000

Date	Sample Number	Location	Total Purge Volume (gal)	Total Purge Volume (L)
9/30/2009	RAGWVSB0577010909	VSB05-77	0.5	1.892706

Time	Temperature (°C)	pH (SU)	SpC (mS/cm)	D.O. (mg/L)	ORP (mv)	Turbidity (NTU)
1247	7.85	6.14	0.082	8.04	280	1249
1250	7.85	6.08	0.035	7.53	283	2000
1253	8.12	6.05	0.001	6.51	275	5999

Date	Sample Number	Location	Total Purge Volume (gal)	Total Purge Volume (L)
9/30/2009	RAGWVSB0587010909	VSB05-87	0.5	1.8927

Time	Temperature (°C)	pH (SU)	SpC (mS/cm)	D.O. (mg/L)	ORP (mv)	Turbidity (NTU)
1333	9.61	6.17	0.005	9.24	283	2000
1336	9.62	6.01	0	6.53	288	5999
1339	10.2	5.91	0	6.12	291	5999

Date	Sample Number	Location	Total Purge Volume (gal)	Total Purge Volume (L)
9/30/2009	RAGWVSB0597010909	VSB05-97		

Time	Temperature (°C)	pH (SU)	SpC (mS/cm)	D.O. (mg/L)	ORP (mv)	Turbidity (NTU)
		BAILED				

Date	Sample Number	Location	Total Purge Volume (gal)	Total Purge Volume (L)
9/30/2009	RAGWVSB05107010909	VSB05-107	0.75	2.8391

Time	Temperature (°C)	pH (SU)	SpC (mS/cm)	D.O. (mg/L)	ORP (mv)	Turbidity (NTU)
1600	9.49	7.43	0.193	8.51	263	1913
1603	9.44	7.37	0.211	5.28	218	1091
1606	9.24	7.34	0.218	4.97	188	936

Date	Sample Number	Location	Total Purge Volume (gal)	Total Purge Volume (L)
10/25/2009	RAGWVSB05117010909	VSB05-117		

Time	Temperature (°C)	pH (SU)	SpC (mS/cm)	D.O. (mg/L)	ORP (mv)	Turbidity (NTU)

BAILER SAMPLE

Date	Sample Number	Location	Total Purge Volume (gal)	Total Purge Volume (L)
10/5/2009	RAGWVSB0666010909	VSB06-66	0.5	1.892706

Time	Temperature (°C)	pH (SU)	SpC (mS/cm)	D.O. (mg/L)	ORP (mv)	Turbidity (NTU)
1354	12.52	8.7	0.193	9.61	219	2000
1357	10.82	8.2	0.073	7.85	243	1950
1400	10.22	8.19	0.071	7.69	253	1499

Date	Sample Number	Location	Total Purge Volume (gal)	Total Purge Volume (L)
10/5/2009	RAGWVSB0687010909	VSB06-87	0.5	1.892706

Time	Temperature (°C)	pH (SU)	SpC (mS/cm)	D.O. (mg/L)	ORP (mv)	Turbidity (NTU)
1604	12.07	8.19	0.099	8.36	306	1017
1607	12.15	8.14	0.129	7.03	307	448
1610	11.79	8.15	0.13	6.69	306	305

Date	Sample Number	Location	Total Purge Volume (gal)	Total Purge Volume (L)
10/5/2009	RAGWVSB06107010909	VSB06-107	1	3.785412

Time	Temperature (°C)	pH (SU)	SpC (mS/cm)	D.O. (mg/L)	ORP (mv)	Turbidity (NTU)
851	6.07	8.3	0.092	7.75	338	333
854	5.8	8.35	0.13	8.85	345	417
857	6.39	7.77	0.28	7.92	356	807

Date	Sample Number	Location	Total Purge Volume (gal)	Total Purge Volume (L)
10/5/2009	RAGWVSB0656010909	VSB06-56		

Time	Temperature (°C)	pH (SU)	SpC (mS/cm)	D.O. (mg/L)	ORP (mv)	Turbidity (NTU)

BAILER SAMPLE

Date	Sample Number	Location	Total Purge Volume (gal)	Total Purge Volume (L)
10/5/2009	RAGWVSB0677010909	VSB06-77	0.5	1.8927

Time	Temperature (°C)	pH (SU)	SpC (mS/cm)	D.O. (mg/L)	ORP (mv)	Turbidity (NTU)
1446	12.73	8.16	0.073	9.38	276	2000
1449	12.4	8.24	0.077	7.82	281	1885
1452	10.97	8.27	0.077	7.38	300	487

Date	Sample Number	Location	Total Purge Volume (gal)	Total Purge Volume (L)
10/5/2009	RAGWVSB0697010909	VSB06-97		

Time	Temperature (°C)	pH (SU)	SpC (mS/cm)	D.O. (mg/L)	ORP (mv)	Turbidity (NTU)

BAILER SAMPLE

Date	Sample Number	Location	Total Purge Volume (gal)	Total Purge Volume (L)
10/5/2009	RAGWVSB06117010909	VSB06-117	1	3.7854

Time	Temperature (°C)	pH (SU)	SpC (mS/cm)	D.O. (mg/L)	ORP (mv)	Turbidity (NTU)
945	6.8	6.8	0.348	8.39	329	303
948	6.77	7.61	0.345	6.56	333	309
951	6.79	7.61	0.115	9.62	350	800
954	6.88	8.01	0.015	7.65	359	5999

Monitoring Well and Vertical Aquifer Profiling Purge Data Sheets

Date	Sample Number	Location	Total Purge Volume (gal)	Total Purge Volume (L)
10/06/2009	RAGWVSB0757010909	VSB07-57	0.75	2.839059

Time	Temperature (°C)	pH (SU)	SpC (mS/cm)	D.O. (mg/L)	ORP (mv)	Turbidity (NTU)
1547	8.13	7.76	0.291	7.66	349	5999
1550	8.12	7.77	0.228	7.68	339	5999
1553	8.4	7.78	0.228	8.61	319	5999
1556	8.26	7.47	0.096	5.29	262	5999

Date	Sample Number	Location	Total Purge Volume (gal)	Total Purge Volume (L)
10/06/2009	RAGWVSB0767010909	VSB07-67	1.1	4.164

Time	Temperature (°C)	pH (SU)	SpC (mS/cm)	D.O. (mg/L)	ORP (mv)	Turbidity (NTU)
1630	7.95	6.03	0.197	5.71	302	5999
1635	8	6.73	0.076	5.09	303	5999

Date	Sample Number	Location	Total Purge Volume (gal)	Total Purge Volume (L)
10/07/2009	RAGWVSB0777010909	VSB07-77	1	3.785412

Time	Temperature (°C)	pH (SU)	SpC (mS/cm)	D.O. (mg/L)	ORP (mv)	Turbidity (NTU)
846	6.83	6.45	0.312	9.1	384	5999
849	7.04	7.03	0.371	7.8	325	5999
852	7.22	7.12	0.383	7.62	279	5999

Date	Sample Number	Location	Total Purge Volume (gal)	Total Purge Volume (L)
10/07/2009	RAGWVSB0787010909	VSB07-87	0.5	1.8927

Time	Temperature (°C)	pH (SU)	SpC (mS/cm)	D.O. (mg/L)	ORP (mv)	Turbidity (NTU)
939	7.5	7.24	0.389	11.93	300	5999
942	7.53	7.41	0.098	7.23	299	5999
945	8.23	7.41	0	6.49	71	5999

Date	Sample Number	Location	Total Purge Volume (gal)	Total Purge Volume (L)
10/07/2009	RAGWVSB0797010909	VSB07-97	0.75	2.839059

Time	Temperature (°C)	pH (SU)	SpC (mS/cm)	D.O. (mg/L)	ORP (mv)	Turbidity (NTU)
1045	8.66	7.69	0.384	3.27	46	1080
1048	8.62	7.68	0.383	3.52	59	1014
1051	8.5	7.71	0.346	7.56	136	2000

Date	Sample Number	Location	Total Purge Volume (gal)	Total Purge Volume (L)
10/08/2009	RAGWVSB07107010909	VSB07-107	0.75	2.8391

Time	Temperature (°C)	pH (SU)	SpC (mS/cm)	D.O. (mg/L)	ORP (mv)	Turbidity (NTU)
918	8.57	7.61	0.248	12.98	312	186
921	8.58	7.68	0.25	9.4	280	2000
924	8.88	7.89	0.001	8.84	152	5999

Date	Sample Number	Location	Total Purge Volume (gal)	Total Purge Volume (L)
10/08/2009	RAGWVSB0857010909	VSB08-57	0.75	2.839059

Time	Temperature (°C)	pH (SU)	SpC (mS/cm)	D.O. (mg/L)	ORP (mv)	Turbidity (NTU)
1325	14.57	7.53	0.084	8.78	127	2000
1328	13.32	7.3	0.068	7.15	149	1835
1331	12.14	7.11	0.06	7.3	183	458

Date	Sample Number	Location	Total Purge Volume (gal)	Total Purge Volume (L)
10/08/2009	RAGWVSB0867010909	VSB08-67	1.2	4.5425

Time	Temperature (°C)	pH (SU)	SpC (mS/cm)	D.O. (mg/L)	ORP (mv)	Turbidity (NTU)
1443	13.99	6.64	0.074	6.35	235	1229
1446	12.55	5.02	0.049	4.97	249	847
1449	12.17	5.91	0.033	4.91	263	427

Monitoring Well and Vertical Aquifer Profiling Purge Data Sheets

Date	Sample Number	Location	Total Purge Volume (gal)	Total Purge Volume (L)
10/08/2009	RAGWVSB0877010909	VSB08-77	1	3.785412

Time	Temperature (°C)	pH (SU)	SpC (mS/cm)	D.O. (mg/L)	ORP (mv)	Turbidity (NTU)
1521	14.65	5.94	0.066	4.8	289	323
1524	14.58	6.3	0.22	5.88	252	2000
1527	13.02	6.91	0.315	4.13	225	1007

Date	Sample Number	Location	Total Purge Volume (gal)	Total Purge Volume (L)
10/08/2009	RAGWVSB0887010909	VSB08-87	0.75	2.8391

Time	Temperature (°C)	pH (SU)	SpC (mS/cm)	D.O. (mg/L)	ORP (mv)	Turbidity (NTU)
1600	10.48	7.44	0.321	5.51	307	753
1603	10.34	7.45	0.319	4.39	306	673
1606	10.93	7.54	0.325	3.1	183	5999

Date	Sample Number	Location	Total Purge Volume (gal)	Total Purge Volume (L)
10/08/2009	RAGWVSB0897010909	VSB08-97	0.75	2.839059

Time	Temperature (°C)	pH (SU)	SpC (mS/cm)	D.O. (mg/L)	ORP (mv)	Turbidity (NTU)
1645	1051	7.68	0.334	6.34	244	2000
1648	1072	7.68	0.333	6.8	234	1734
1651	1084	7.66	0.361	6.7	248	1632

Date	Sample Number	Location	Total Purge Volume (gal)	Total Purge Volume (L)
10/08/2009	RAGWVSB08107010909	VSB08-107	1	3.7854

Time	Temperature (°C)	pH (SU)	SpC (mS/cm)	D.O. (mg/L)	ORP (mv)	Turbidity (NTU)
1728	10.73	7.7	0.332	5.81	313	175
1731	10.53	7.75	0.301	8.5	310	995
1734	10.06	7.96	0.26	6.68	304	173

Date	Sample Number	Location	Total Purge Volume (gal)	Total Purge Volume (L)
10/08/2009	RAGWVSB08117010909	VSB08-117	1	3.785412

Time	Temperature (°C)	pH (SU)	SpC (mS/cm)	D.O. (mg/L)	ORP (mv)	Turbidity (NTU)
1815	9.44	8	0.251	7.29	347	239
1818	9.71	8	0.211	9.61	352	1270
1821	9.55	8.57	0.095	7.89	346	476

Date	Sample Number	Location	Total Purge Volume (gal)	Total Purge Volume (L)
10/09/2009	RAGWVSB0967010909	VSB09-67		

Time	Temperature (°C)	pH (SU)	SpC (mS/cm)	D.O. (mg/L)	ORP (mv)	Turbidity (NTU)
BAILER SAMPLE						

Date	Sample Number	Location	Total Purge Volume (gal)	Total Purge Volume (L)
10/09/2009	RAGWVSB0977010909	VSB09-77	0.75	2.839059

Time	Temperature (°C)	pH (SU)	SpC (mS/cm)	D.O. (mg/L)	ORP (mv)	Turbidity (NTU)
1236	9.33	7.05	0.284	7.92	306	479
1239	9.02	7.29	0.309	6.83	291	380
1242	8.84	7.44	0.31	6.42	283	338

Date	Sample Number	Location	Total Purge Volume (gal)	Total Purge Volume (L)
10/09/2009	RAGWVSB0987010909	VSB09-87	0.75	2.8391

Time	Temperature (°C)	pH (SU)	SpC (mS/cm)	D.O. (mg/L)	ORP (mv)	Turbidity (NTU)
1304	9.17	7.61	0.305	6.5	294	115
1307	9.1	7.54	0.312	7.32	213	2000
1310	9.89	7.65	0.4	2.22	16	2000

Monitoring Well and Vertical Aquifer Profiling Purge Data Sheets

Date	Sample Number	Location	Total Purge Volume (gal)	Total Purge Volume (L)
10/09/2009	RAGWVSB1077010909	VSB10-77	0.75	2.839059

Time	Temperature (°C)	pH (SU)	SpC (mS/cm)	D.O. (mg/L)	ORP (mv)	Turbidity (NTU)
1606	9.07	7.92	0.403	234	133	2000

BAILED SAMPLE

Date	Sample Number	Location	Total Purge Volume (gal)	Total Purge Volume (L)
10/09/2009	RAGWVSB1087010909	VSB10-87	0.75	2.8391

Time	Temperature (°C)	pH (SU)	SpC (mS/cm)	D.O. (mg/L)	ORP (mv)	Turbidity (NTU)
1720	10.75	8.85	0.091	6.61	159	5999
1723	13.18	8.96	0.079	6.36	158	5999
1726	13.2	8.96	0.063	6.55	170	5999

Date	Sample Number	Location	Total Purge Volume (gal)	Total Purge Volume (L)
10/09/2009	RAGWVSB1097010909	VSB10-97		

Time	Temperature (°C)	pH (SU)	SpC (mS/cm)	D.O. (mg/L)	ORP (mv)	Turbidity (NTU)

BAILER SAMPLE

Date	Sample Number	Location	Total Purge Volume (gal)	Total Purge Volume (L)
10/10/2009	RAGWVSB10107010909	VSB10-107		

Time	Temperature (°C)	pH (SU)	SpC (mS/cm)	D.O. (mg/L)	ORP (mv)	Turbidity (NTU)

BAILER SAMPLE

Date	Sample Number	Location	Total Purge Volume (gal)	Total Purge Volume (L)
10/10/2009	RAGWVSB10117010909	VSB010-117		

Time	Temperature (°C)	pH (SU)	SpC (mS/cm)	D.O. (mg/L)	ORP (mv)	Turbidity (NTU)

BAILER SAMPLE

Date	Sample Number	Location	Total Purge Volume (gal)	Total Purge Volume (L)
10/10/2009	RAGWVSB10127010909	VSB10-127		

Time	Temperature (°C)	pH (SU)	SpC (mS/cm)	D.O. (mg/L)	ORP (mv)	Turbidity (NTU)

BAILER SAMPLE

Date	Sample Number	Location	Total Purge Volume (gal)	Total Purge Volume (L)
10/10/2009	RAGWVSB10137010909	VSB010-137		

Time	Temperature (°C)	pH (SU)	SpC (mS/cm)	D.O. (mg/L)	ORP (mv)	Turbidity (NTU)

BAILER SAMPLE

Date	Sample Number	Location	Total Purge Volume (gal)	Total Purge Volume (L)
10/10/2009	RAGWVSB10147010909	VSB010-147		

Time	Temperature (°C)	pH (SU)	SpC (mS/cm)	D.O. (mg/L)	ORP (mv)	Turbidity (NTU)

BAILER SAMPLE