Munson Business Interiors

Space Solved, Deadline Met, Image Enhanced

Rank (2)stars 08 Major General - President Series with Leather Inlay (Kimball or equivalent)

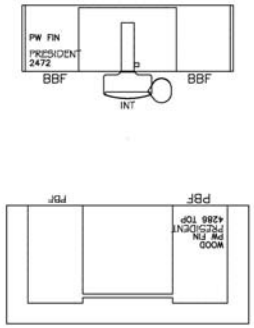

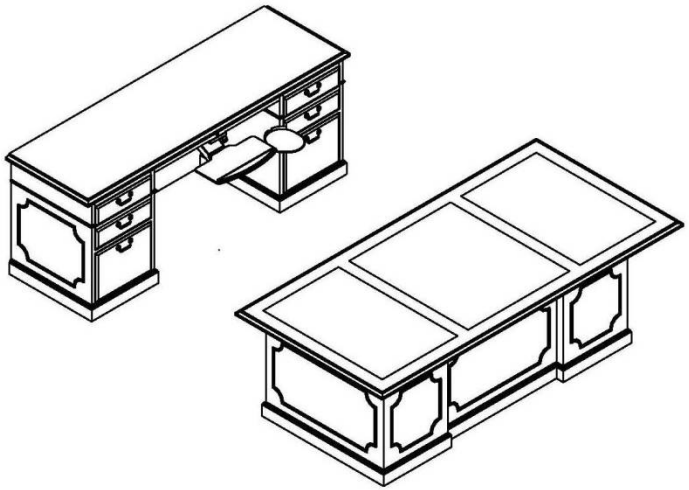

Munson Business Interiors

Space Solved, Deadline Met, Image Enhanced

Rank (1)star 07 Brigadier General – Senator Series with Molding (Kimball or equivalent)

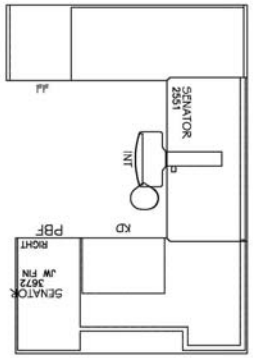

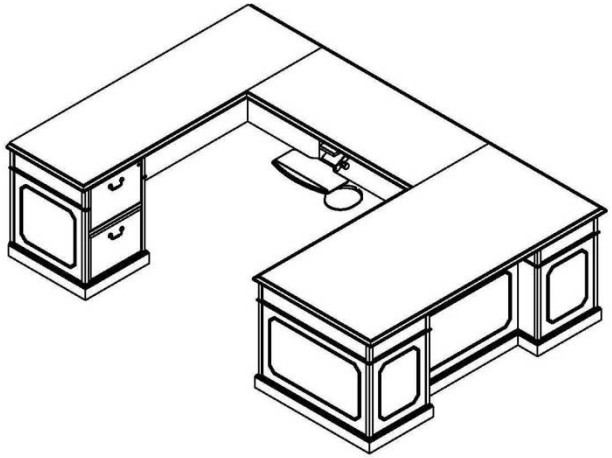

Munson Business Interiors

Space Solved, Deadline Met, Image Enhanced

Rank 06 Colonel – Transcend Series
(Kimball or equivalent)

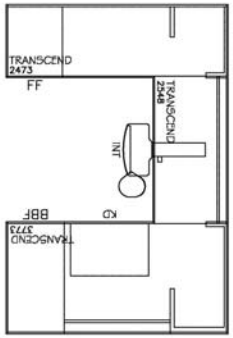

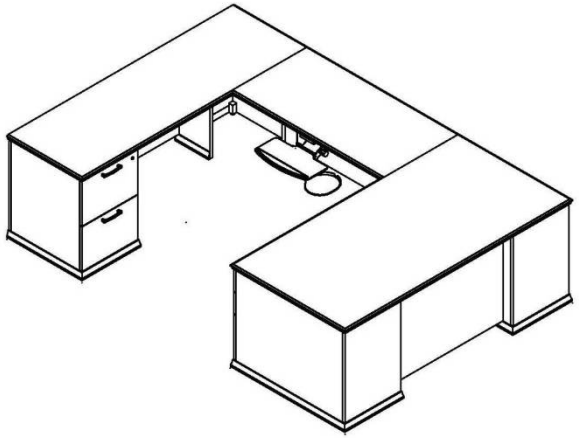

Munson Business Interiors

Space Solved, Deadline Met, Image Enhanced

GO Command Suite Staff

Receptionist – Cetra Series – 42” High Panels, Transaction Counter, Wood/Fabric Combo (Kimball or equivalent)

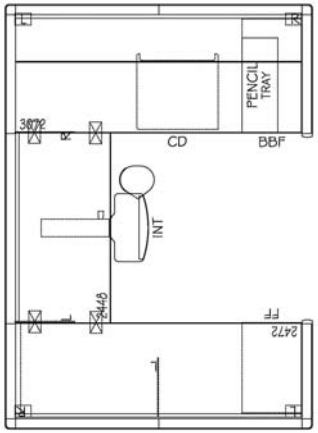

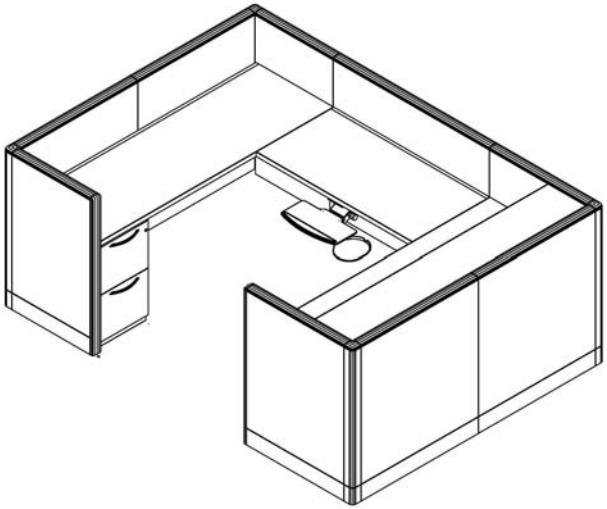

Desk will have wood work surfaces. Storage pieces will have metal chassis’ and wood fronts similar to the photo at the right.

Munson Business Interiors

Space Solved, Deadline Met, Image Enhanced

GO Command Suite Staff

Option 1 – Cetra Series – 42” High Panels, Wood/Fabric combo – Part time (Kimball and equivalent)

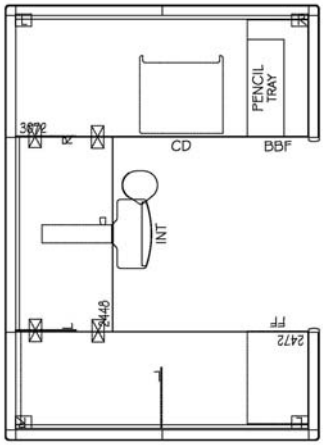

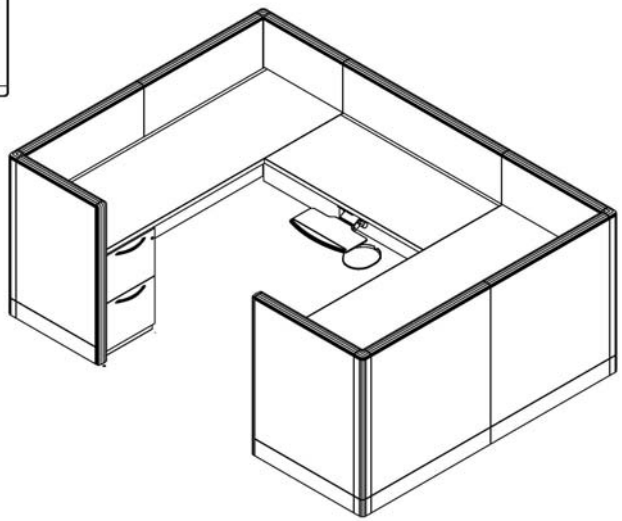

Desk will have wood work surfaces. Storage pieces will have metal chassis’ and wood fronts similar to the photo at the right.

Munson Business Interiors

Space Solved, Deadline Met, Image Enhanced

GO Command Suite Staff

Option 3 – Cetra Series – 68” High Panels, Overhead, Wood/Fabric Combo – Full time (Kimball or equivalent)

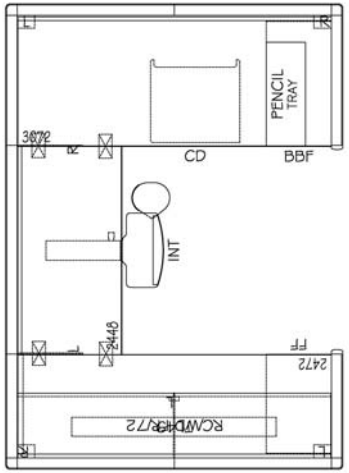

Desk will have wood work surfaces. Storage pieces will have metal chassis’ and wood fronts similar to the photo at the right.

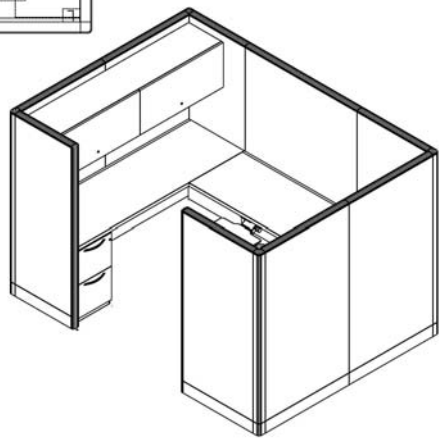

Munson Business Interiors

Space Solved, Deadline Met, Image Enhanced

Family Support & Recruiting/Retention Office

Option 1 – Footprint Series – Wood Top with Wood Fronts & Metal Chassis (Kimball or equivalent)

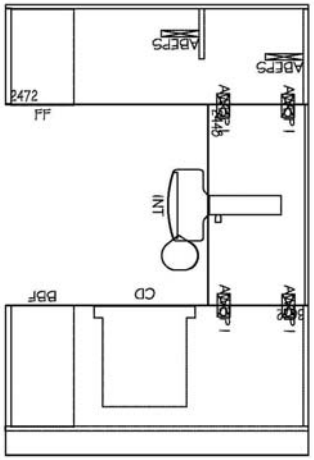

Desk will look like an all wood desk from the approach side, actual sides & back panels will be metal like shown in the smaller photos

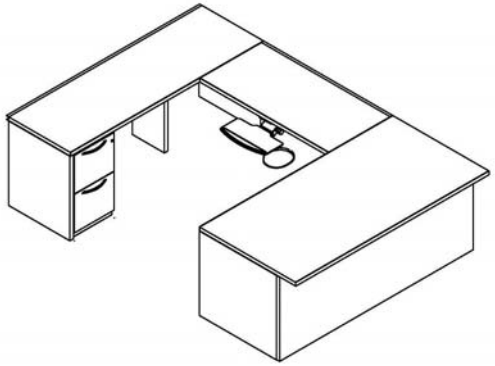

Munson Business Interiors

Space Solved, Deadline Met, Image Enhanced

Family Support & Recruiting/Retention Office

Option 2 – Footprint Series – Wood Top with Metal Chassis (Kimball or equivalent)

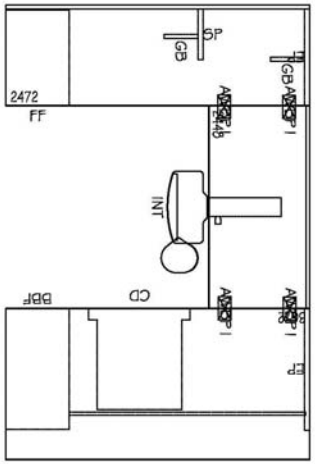

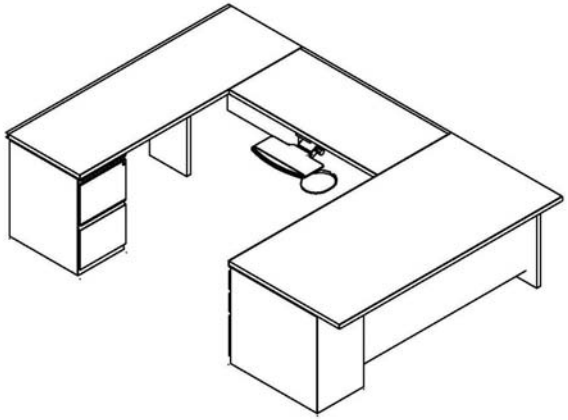

Entire desk unit priced will have an all metal chassis like back credenza shown in the picture above